TAKACHI

2022-24
ALL PRODUCT CATALOG

CASE BOX RACK & CUSTOM

TAKACHI ELECTRONICS ENCLOSURE CO., LTD.

TAKACHI STANDARD ENCLOSURES

TAKACHI is a leading Japanese manufacturer of enclosures for a variety of applications.

We provide high quality plastic, aluminium, and stainless steel enclosures for use in the electronic, industrial and various other fields worldwide.
Our warehousing facility allows us to both keep inventory, and provide timely shipments upon order.

Data Logger

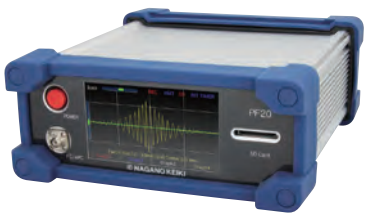

Coating Thickness Gauge

Data Hub

IoT Gateway

Wi-Fi Access Point

Medical Equipment

CUSTOMIZED ENCLOSURE

TAKACHI can be your "one stop shop" for your customization requirements.

We provide value-added services, such as CNC machining, inkjet printing, and many more on our available range of enclosures.
Available from 1 unit onwards with a short lead-time, we can assist you with the creation of your original design.
CAD data can also be downloaded from our website for use in your design.

CNC Machining on Aluminium

CNC Machining on Plastic

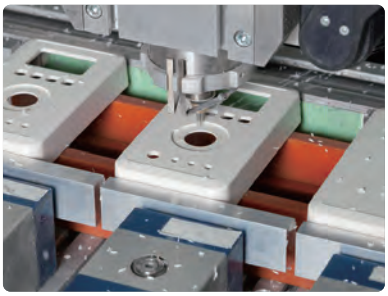

Laser Cutting

Punching Press

Inkjet Printing

Digital Printed Overlay

TAKACHI

Visit our website for all the information you need!

www.takachi-enclosure.com

Send your inquiry/request directly from our website!

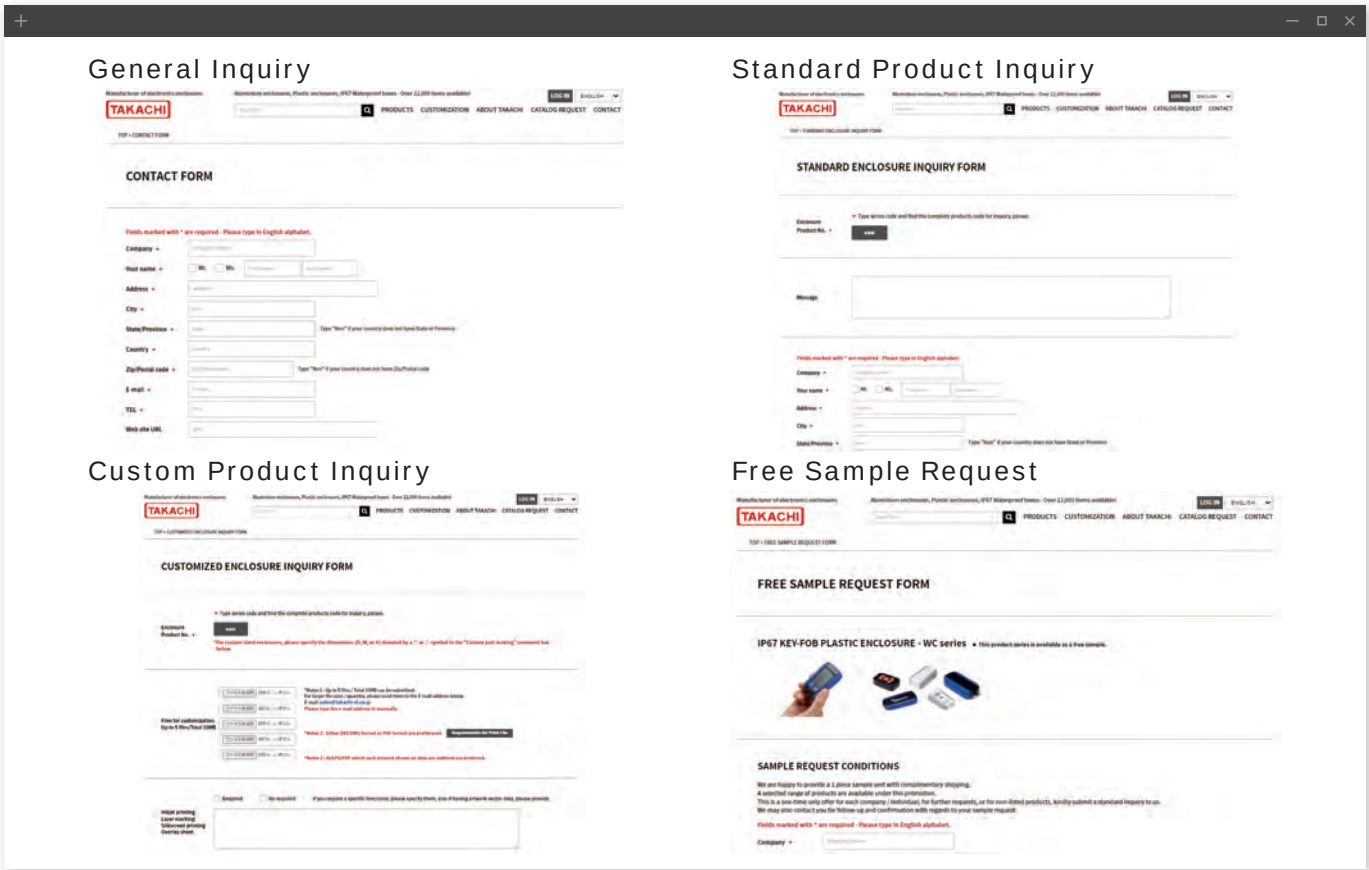

TAKACHI

CUSTOM SIZE WEB QUOTATION

Easily request for a quotation with our CUSTOM SIZE WEB QUOTATION for your custom size enclosure needs.

1 First, access the custom size enclosure product page and click CUSTOM SIZE - WEB QUOTATION button.

2 A new window -CUSTOM SIZE WEB QUOTATION- will appear; enter the required dimensions and quantity.

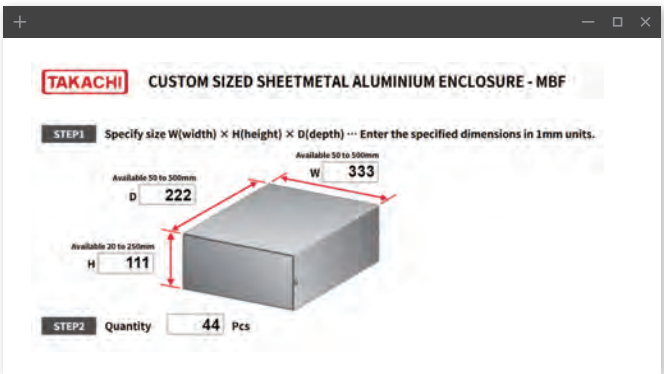

3 Once you have filled in the required information, click the GENERATE PRODUCT NO. button. You can now see the generated product number.

4 Fill in your information and click CONFIRM
An overseas sales personnel will respond to your inquiry.

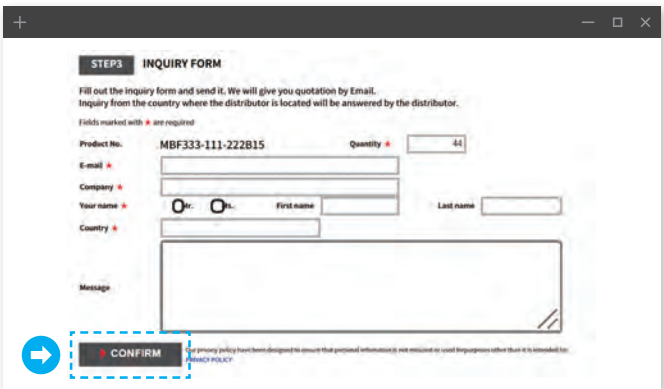

TAKACHI

3D VIEW

3D view is available for a more realistic viewing of the product and components.
No CAD software is needed to view it in 3D.

3D CAD DATA DOWNLOAD

3D CAD data (.stp) can be downloaded from Website with a login registration. Utilize them for your designs and product development.

*3D CAD data (.stp) is available for products with a "STP" button.

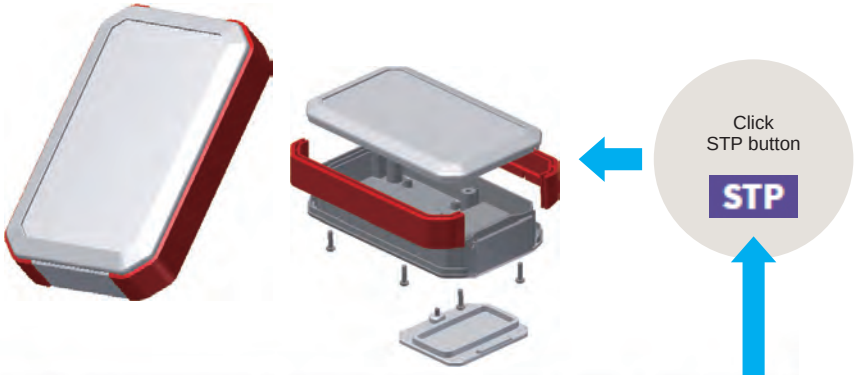

PRODUCT NO. / DIMENSIONS

Product No.	External dimensions			Internal dimensions			Battery compartment	Weight (g)	PDF	3D PDF	DXF	DWG	STP
	W	H	D	w	h	d							
WH125-20-N-□	79	20	126	39	9	107.7	None	101	PDF	3D PDF	DXF	DWG	STP
WH125-20-F2-□	79	20	126	60	9	46.4	AAA x 2	102	PDF	3D PDF	DXF	DWG	STP
WH125-20-F3-□	79	20	126	60	9	35.9	AAA x 3	109	PDF	3D PDF	DXF	DWG	STP
WH125-28-N-□	79	28	126	39	17	106.3	None	119	PDF	3D PDF	DXF	DWG	STP
WH125-28-F2-□	79	28	126	60	17	46.4	AAA x 2	121	PDF	3D PDF	DXF	DWG	STP
WH125-28-F3-□	79	28	126	60	17	35.9	AAA x 3	127	PDF	3D PDF	DXF	DWG	STP
WH145-20-N-□	88	20	146	45	8	129.6	None	125.5	PDF	3D PDF	DXF	DWG	STP

PRODUCT SEARCH

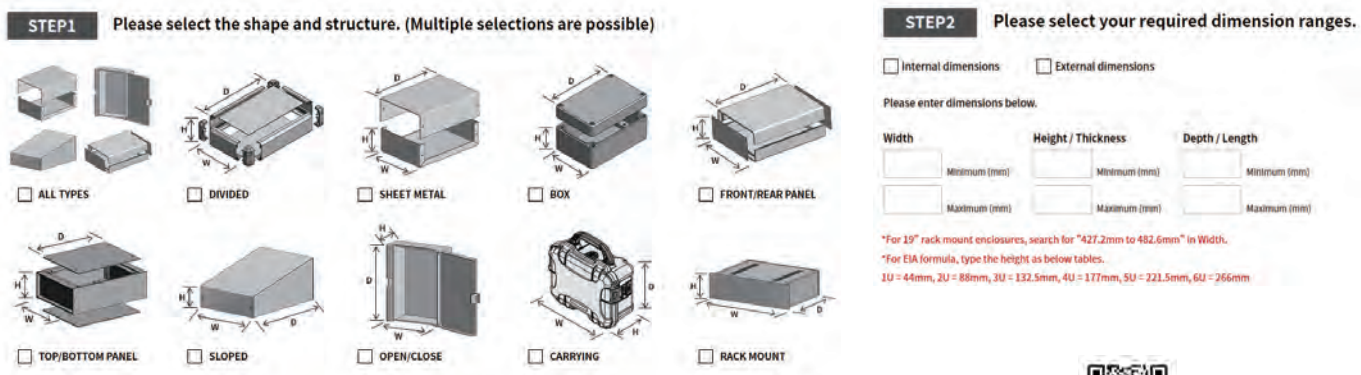

Search by enclosure dimensions, material and function from https://www.takachi-enclosure.com/search/detail.

STOCK AVAILABILITY CHECK

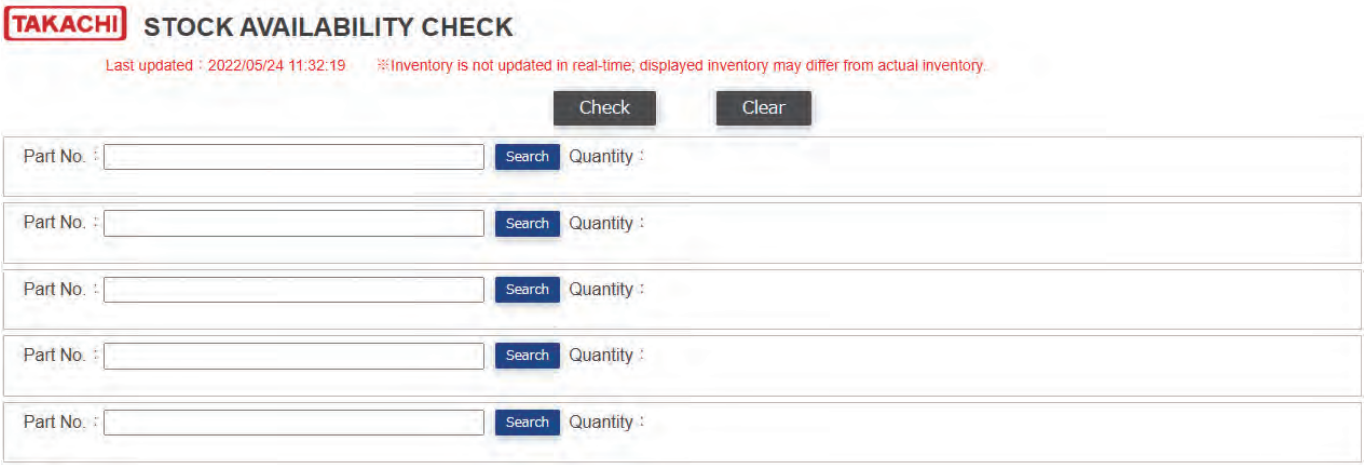

Availability check from https://takachi-web.com/link/os/stock.php.

CUSTOM PROCESSING VIDEO

CUSTOMIZATION VIDEO / PRODUCT INTRODUCTION VIDEO

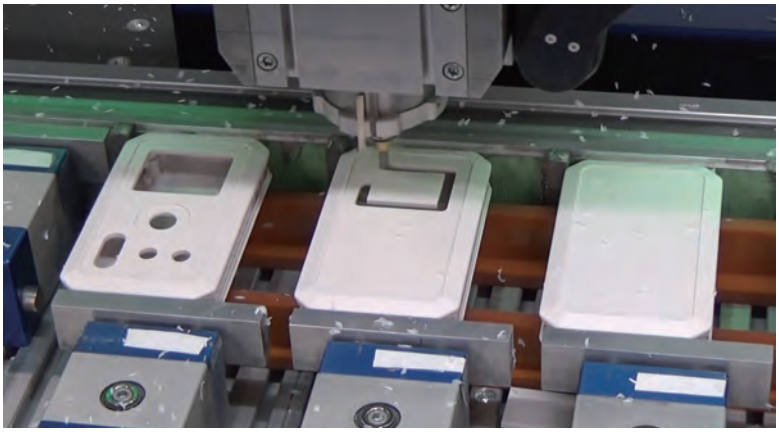

Customization videos on YouTube link are located on each product page.
Check the details of customization from this video link.

TAKACHI

DIGITAL PRINTED OVERLAY

Layers

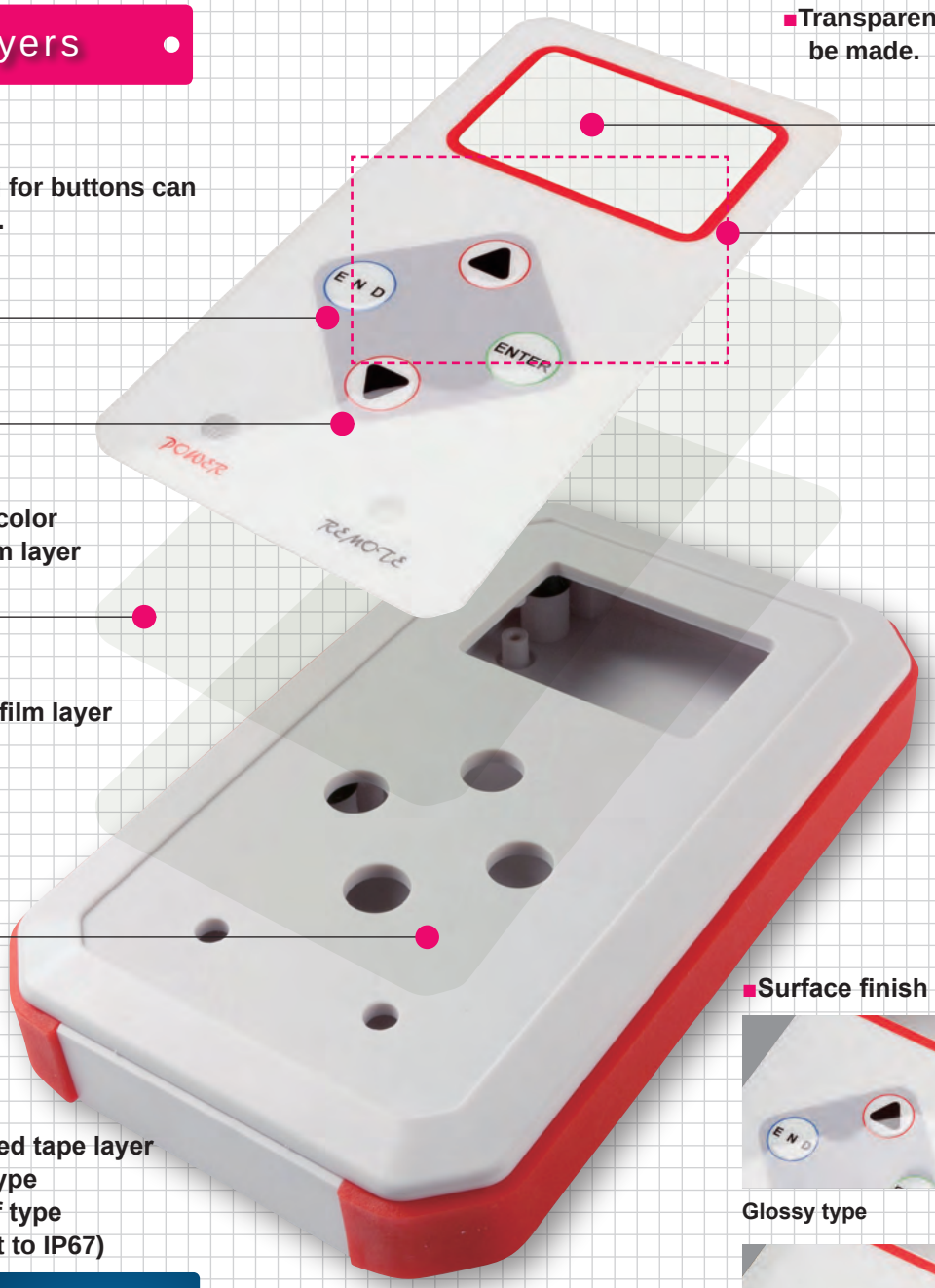

■Transparent windows can be made.

■Embossing for buttons can be formed.

■Digital full color printed film layer

■Laminated film layer

■Double-sided tape layer
Standard type
Waterproof type
(Equivalent to IP67)

Waterproof type is equivalent to IP67 protection class.

IP67

■Surface finish

Glossy type

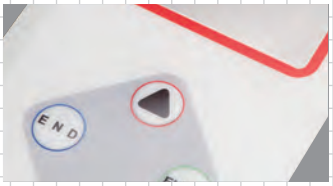

Matte type

Glossy type is recommended if transparent window is required.

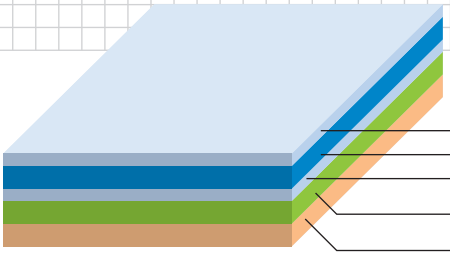

■Layer details

Layer		Material	Thickness
Protective layer		Polypropylene	0.040mm
Printed film layer		PET	0.198mm
Laminated film layer		PET	0.016mm
Double-sided tape layer	Standard	Acrylic	0.17mm
	Waterproof	Acrylic	0.15mm
Paper liner		Paper	-

●Comparison between internal (in-house) and external manufacturing methods

Internal Mfg. (small-scale)

Print data creation → Inkjet printing and laminating process → Cutting data creation → Cutting of double-sided tape, pasting, cutting of individual piece

External Mfg. (large-scale)

Print plate creation → Printing and laminating process → Cutting die manufacture → Punching of double-sided tape, pasting, punching of individual piece

Production time

●Benefits of small-scale internal manufacturing

Reason 1

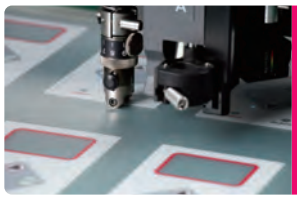

Cutting process → Use of in-house cutting plotter reduces lead-time required by removing the need for cutting die manufacture.

Reason 2

Printing process → Use of in-house digital inkjet printer reduces lead-time required for printing.

Reason 3

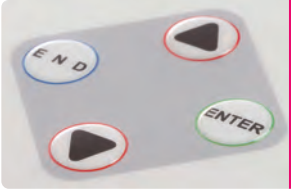

Embossing process → Use of in-house embossing machine reduces lead-time required as compared to emboss die manufacture.

CUSTOMIZATION EXAMPLE

TAKACHI

INKJET PRINTING

- Full color, digitally designed images print can be performed cost effectively.
- Efficient print method allows small batches to be printed in 1 run.

Lower printing cost

Full color print possible at no additional cost

Inkjet printing 1 run only for full color print

Printing cost Full color

Silk-screen printing Printing cost x number of colors

Printing cost Color 1	Printing cost Color 2	Printing cost Color 3	Printing cost Color 4

Lower lead-time

Less production processing required

Inkjet printing

Print data received	Print data creation*	Printing

*for more info.

Silk-screen printing

Print data received	Print data creation	Print Mold production	Ink mixing	Printing	Drying

Repeat procedures x number of colors.

High quality printing of photo image and color gradation.

Print photo images in maximum 1,800 x 1,800 dpi quality.
Pictures, logos and unique designs with color gradation can be recreated in a high quality print.

Maximum printable enclosure size

Printable on surfaces with height differential

Printing is possible on recessed, sloped and rounded sections.

Gap difference is less than 2.0mm.

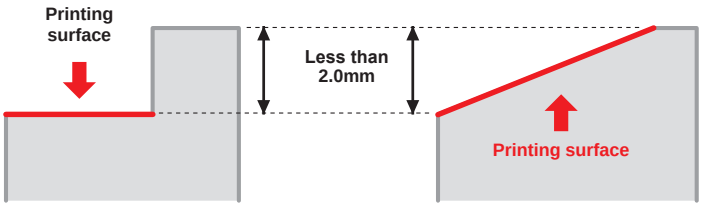

*Not suitable if height difference is more than 2.0mm.

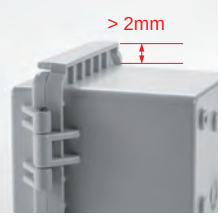

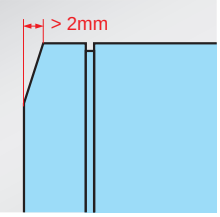

Printed example

LASER MARKING

Laser marking is a method of printing designs, letters and so on by irradiating a laser beam onto an object to melt, scorch, peel, scrape, oxidize, or discolor the surface.

Our 3D-controlled laser marker freely control the focal distance, and to provide highly accurate marking is possible.

No minimum order is required, please feel free to contact us for quoting.

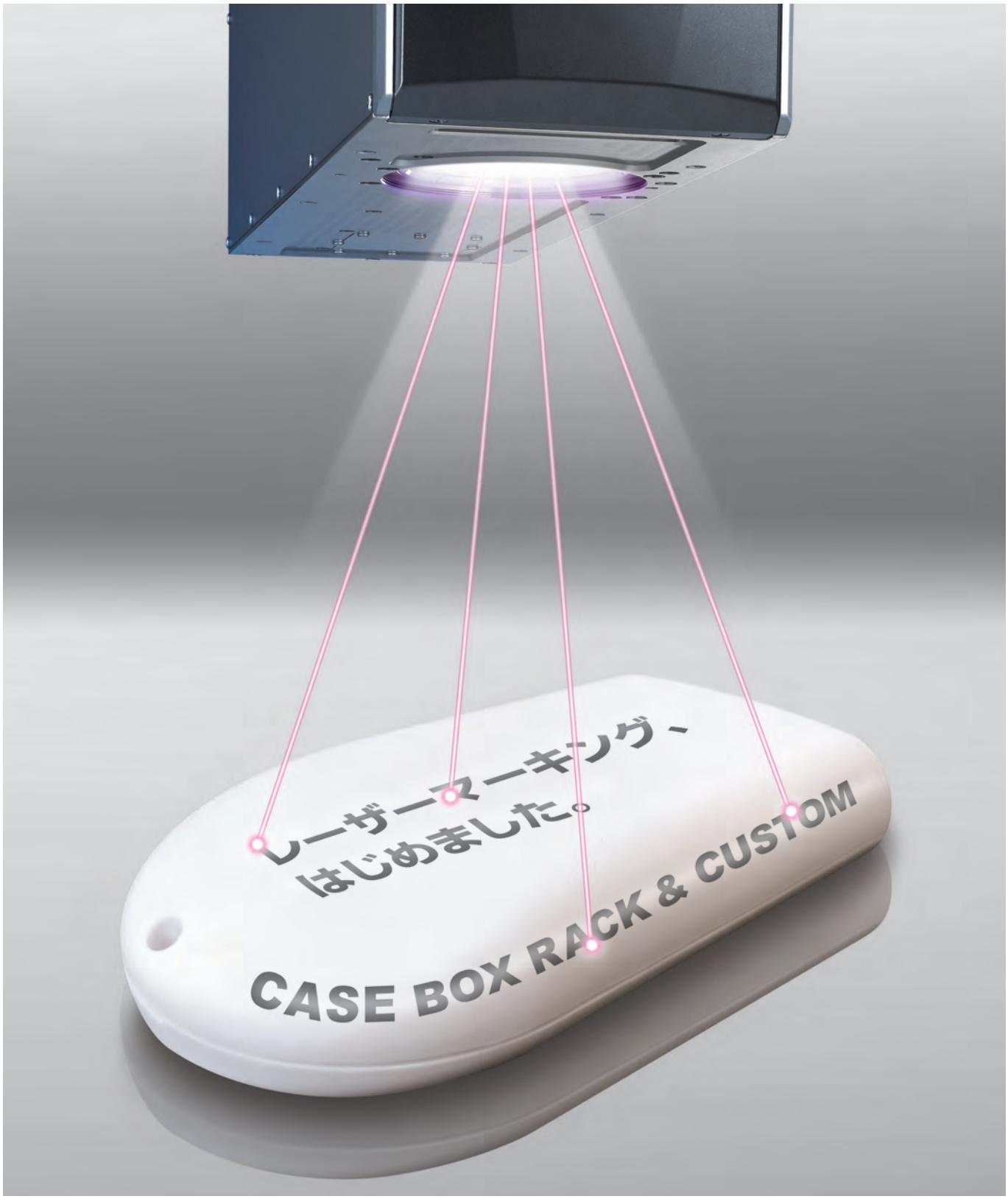

Advantage 1

Marking on surfaces with height differences and curved, also providing excellent durability and abrasion resistance.

Marking possible on the 3.5mm or more height difference surfaces.

Advantage 2

Marking on metal surfaces gives a high-end finish.

CNC MACHINING

CNC milling is a form of computer controlled machining. Similar in operation to drilling and cutting, it is able to create various hole styles and shapes by using a rotating cutting tool to bore into the object.

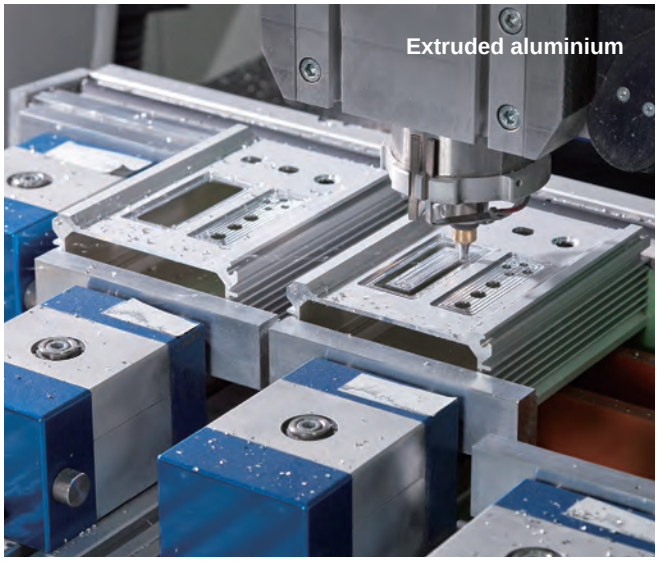
Extruded aluminium

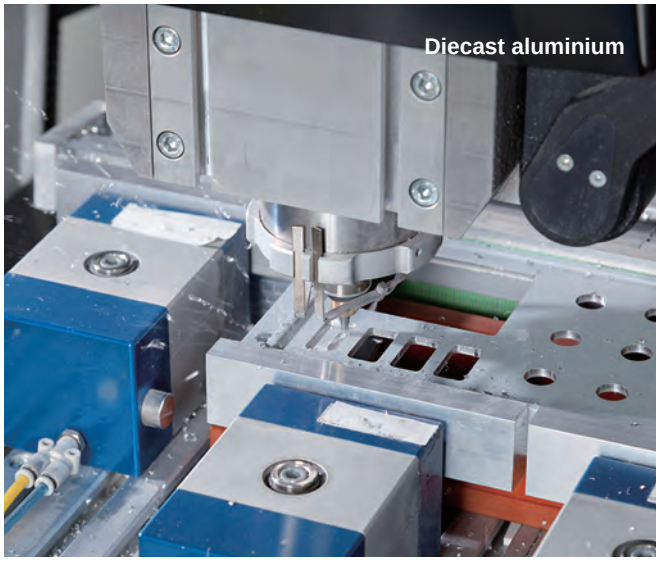
Diecast aluminium

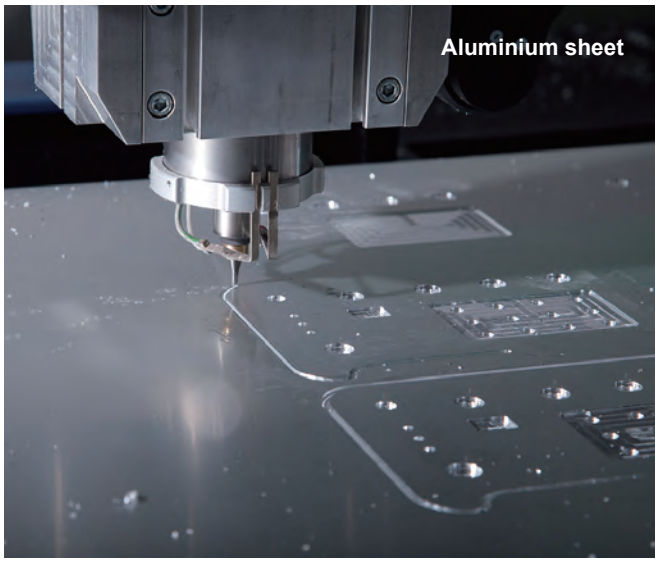
Aluminium sheet

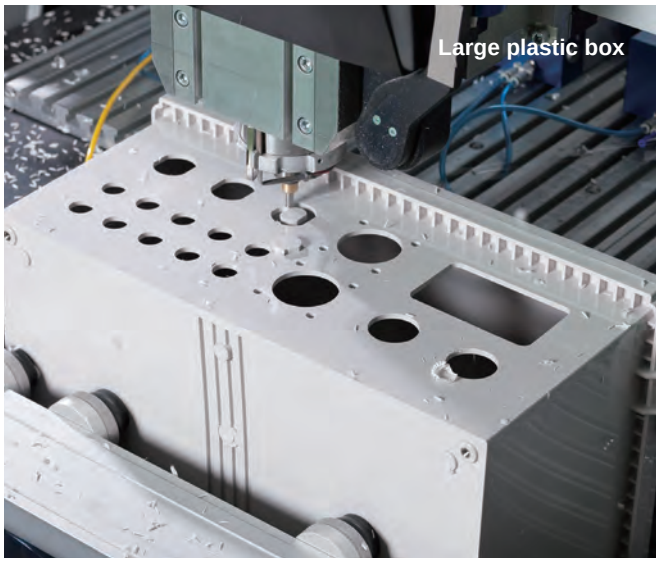
Large plastic box

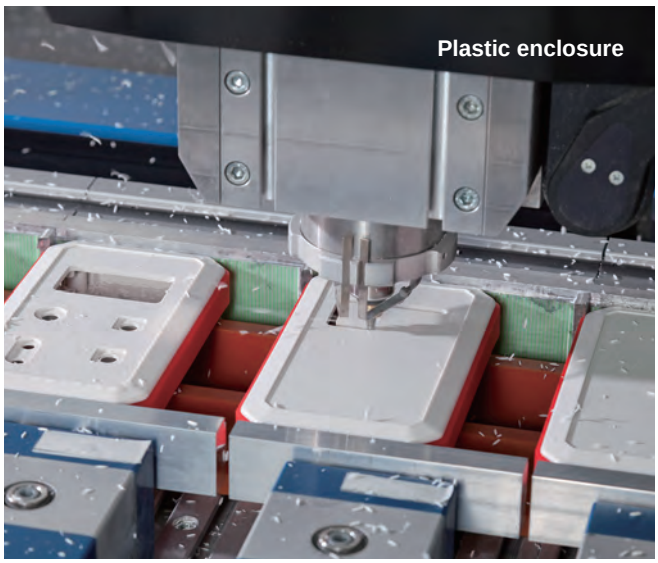
Plastic enclosure

Engraving of fine text or complex designs can be performed on a variety of surfaces

LASER CUTTING for ACRYLIC CASE

Laser cutting for acrylic case is available.
Show inside of enclosure for visual appeal with our transparent case.

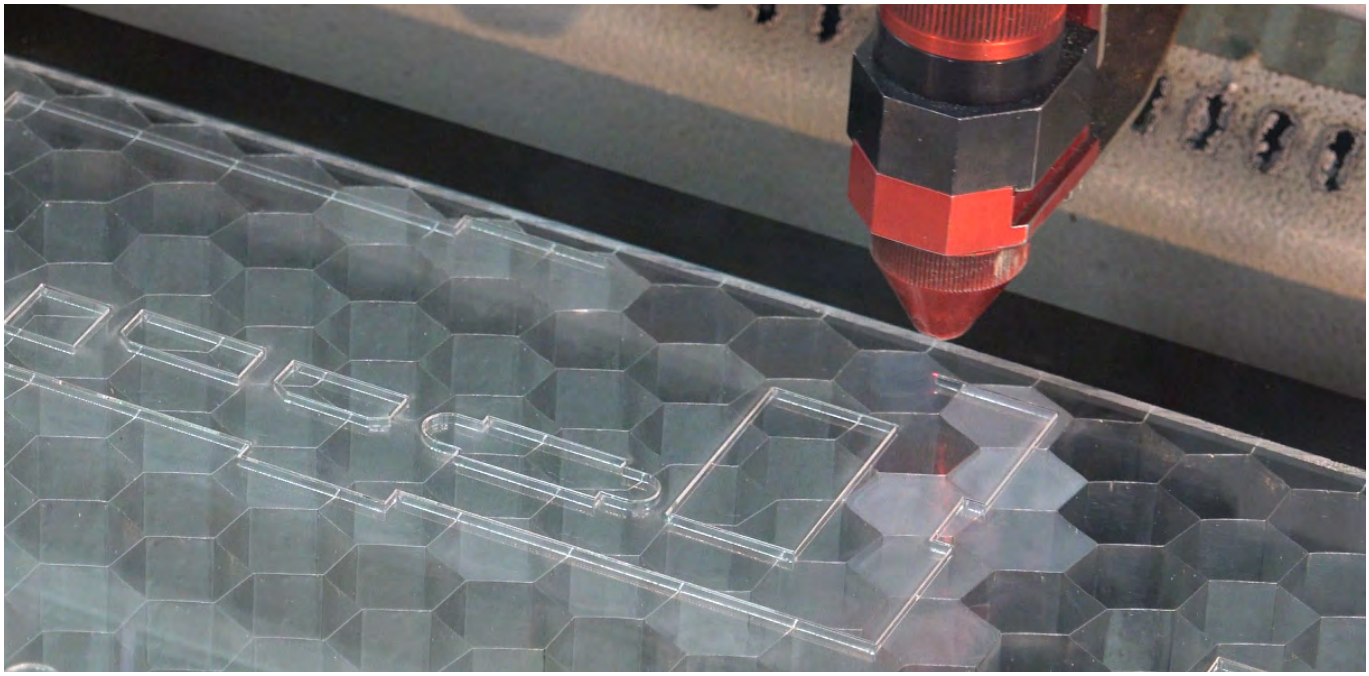

Developed idea by using acrylic panels

Aluminium panels can be exchanged for an acrylic panel for display of internal components. Perfect for use as showcase models or product demonstrations. (Example: FC series)

Used as a visually appealing decorative front panel placing on a standard aluminium panel. (Example: AWA series)

LASER CUTTING for ALUMINIUM

Laser cutting utilizes a laser to perform cutting on an object, allowing various types and shapes of holes to be cut.
New fiber laser cutting machine allows the processing of aluminium sheets with both high precision and speed.
Processing of Pure Aluminium 1050 is also possible with minimal burr as compared to conventional CO_2 laser machines, which causes excessive burring.

FIBER LASER CUTTING MACHINE

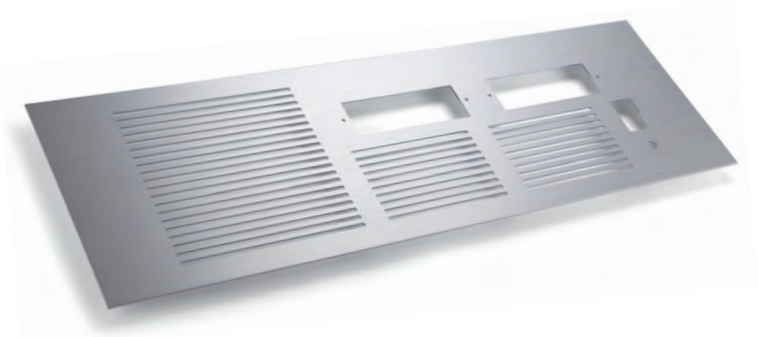

PUNCHING PRESS

What is punching press? It is a type of machine press used to cut holes in material via the use of various sized die sets.
Punching press allows the realization of high cost performance due to its high speed automated turret punching process, which significantly reduces machining lead-time.
Due to its ability to create designated sized holes by means of rapid multiple hole punches, this enables it to punch holes of various sizes and types quickly and efficiently.

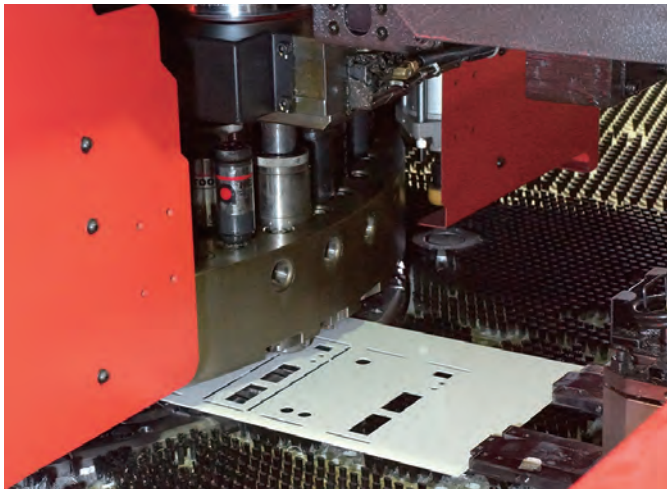

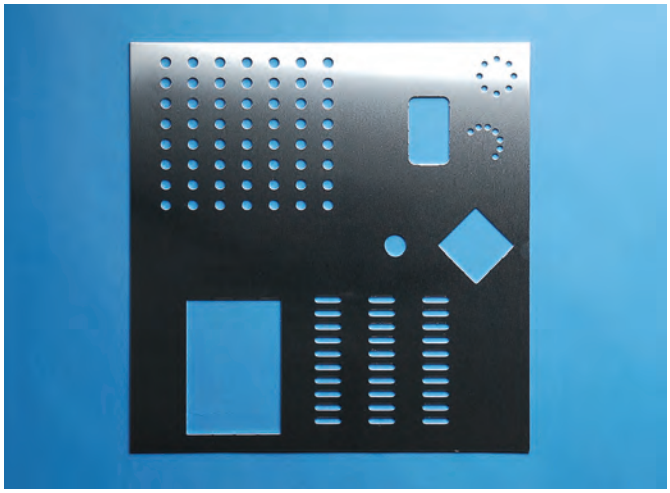

Circular hole

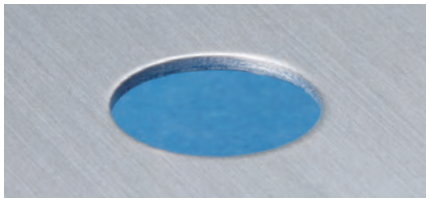

Circular holes as small as 1.0mm in diameter can be punched .

Nibbling press (rectangle)

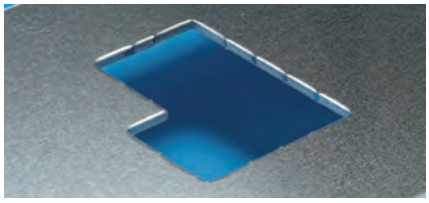

Complex or large rectangular shapes can be punched out with multiple presses.

Nibbling press (round)

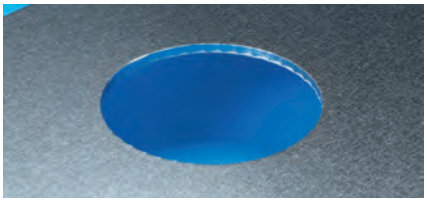

Punching of large circular holes with multiple smaller die strokes.

Common connector shapes

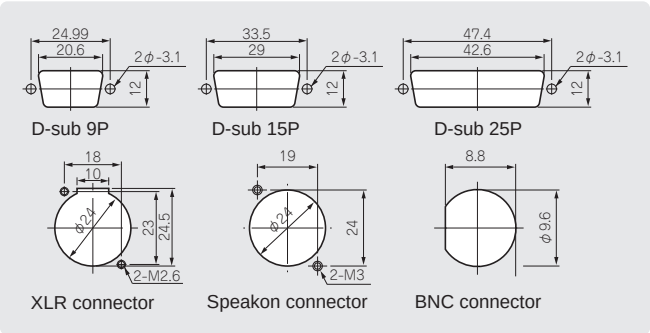

Unique shapes

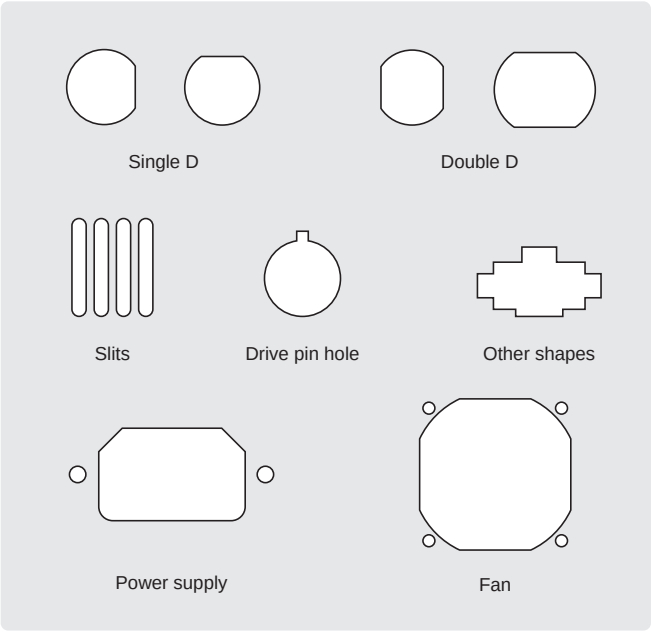

Burring punch

Increasing surface area on a thin metallic sheet for screw threads to bore into.

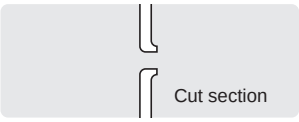

SELF-CLINCHING STANDOFF / STUD / NUT

Easy attaching of self-clinching fasteners into simple through-holes.
A specialized press machine for clinching is utilized to ensure that the standoffs / studs / nuts are securely attached.
117 different kinds of standoffs / studs /nuts are available, in addition to a non-through hole concealed-head type.

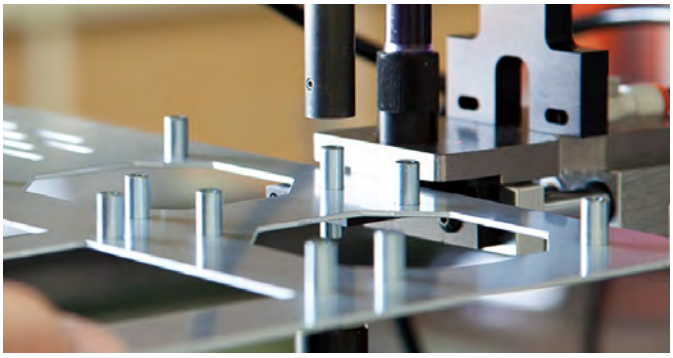

CONCEALED-HEAD SELF-CLINCHING STANDOFFS

Installed into recessed pockets so that one side of the panel remains unmarked.
Standoffs can be mounted onto 1.5mm or thicker material without requiring a through-hole to be milled.
Concealed-head standoffs/studs ensure that the IP rating (for waterproof type enclosure) is maintained.

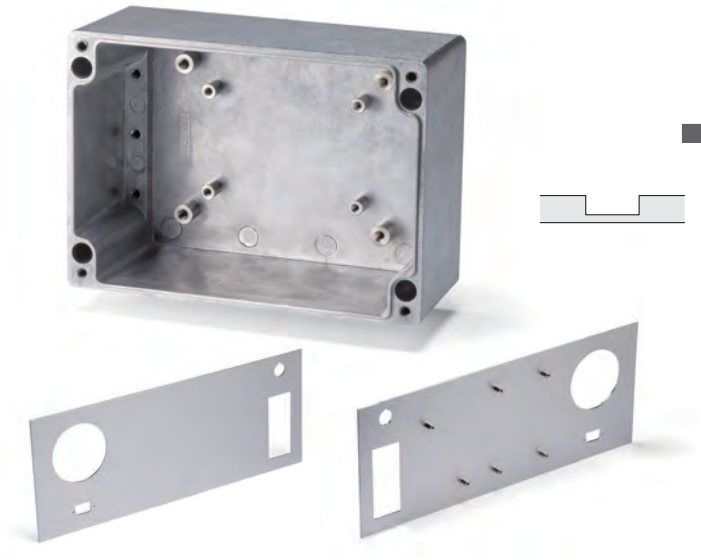

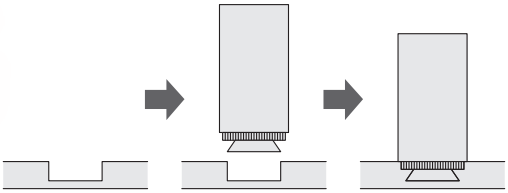

Concealed-head standoffs/studs give an aesthetically better finish on the enclosure.
A recess cut is made on the internal side, and the standoffs are press-inserted in.

●Mounting Mark Visibility

Thickness	Mark visibility	
	M3	M4
1.5mm	△	×
2.0mm	◎	○
2.5mm	◎	◎
3.0mm ~	◎	◎

◎ Almost invisible
○ Barely visible
△ Somewhat visible
× Very visible

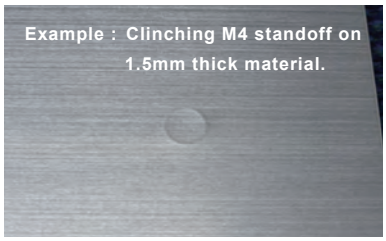

Mounting is possible on 1.5mm thick material. Mounting mark would be almost invisible on 2.5mm or thicker material.

STUD WELDING

Welded fasteners on aluminium objects. Standoffs and studs with little surface weld marks can be achieved.
Welding process is available on raw aluminium material only (not available for painted or anodized aluminium) as welding requires the material to be conductive.

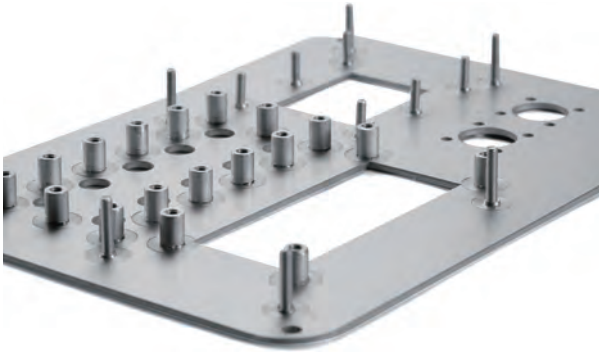

CUSTOM ANODIZATION

Anodization is an electrochemical process that converts the aluminium surface into a decorative, durable, corrosion-resistant, anodic oxide finish. We can process custom color anodization such as blue, green, red, purple and so on.
As well as color anodization, clear alodine finish for maintaining conductive use is also available.

CUSTOM PAINTING

Custom painting service for both plastic and metal enclosure is available.

CUSTOM CONDUCTIVE COATING

Custom conductive coating service is available. DOTITE conductive paint (acrylic paint mixed with nickel filler) can be coated internally on plastic enclosures make them conductive.

CUSTOM COLOR INJECTION

Custom color injection service for silicone cover and plastic enclosure is available.
Contact us for more details.

PHOTO INDEX

= EMC Shielding Effect

PLASTIC ENCLOSURES

IP68 HIGH PERFORMANCE WATERPROOF BOX
WG series P1-4, 7-10

IP68 PLASTIC ENCLOSURE with VENTILATION PLUG
WGV series P1-2, 5-10

ECONOMICAL OUTDOOR NETWORK BOX
OB series P11-14

IP67 NETWORK PLASTIC BOX
WP series P15- 24

IoT SMALL PLASTIC CASE
SIC series P25-28

WALL MOUNT IoT SMALL PLASTIC CASE
SIM series P25-26, 29-30

SHOCKPROOF PLASTIC ENCLOSURE
PFG series P31- 34

NETWORK PLASTIC BOX
PF series P35-40

EMC SHIELDED PLASTIC BOX
PFE series P41-42

FLANGED NETWORK PLASTIC BOX
PFF series P43-44

FLANGED PLASTIC ENCLOSURE
TWF series P45-48

IP67 PORTABLE PLASTIC CASE
WC series P51-56

IP67 HAND-HELD ENCLOSURE
WH series P57-62

HAND-HELD CASE with SHOCKPROOF SILICONE COVER
LCT series P50, 63-70

HAND-HELD CASE with SILICONE COVER
LCS series P50, 63-66, 71-74

PHOTO INDEX

= EMC Shielding Effect

PLASTIC ENCLOSURES

HAND-HELD PLASTIC CASE
LC series P50, 63-66, 75-76, 79-80

EMC SHIELDED HAND-HELD PLASTIC CASE
LCE series P63-66, 77-80

PORTABLE PLASTIC CASE with SILICONE COVER
CSS series P49, 81-86, 90

PORTABLE PLASTIC CASE
CS series P49, 81-84, 87-90

PORTABLE PLASTIC CASE
PS series P91- 94

IP67 SLOPED PLASTIC CASE
WSC series P97-100

PLASTIC ENCLOSURE with SILICONE PROTECTOR
TWS series P101-106

MULTIPURPOSE PLASTIC ENCLOSURE
TW • TWN series P107-110

SKELETON ACRYLIC CASE
SKL series P111-114

PLASTIC ENCLOSURE ACCESSORIES

STRAP • KEY RING
STP • STPS • CR-20 series P95-96

POLE MOUNTING BRACKET • SUSPENSION BRACKET
WPMB-M4-3 • WM series P115-116

NEODYMIUM MAGNET
NMG series P117

BELT CLIP
GDH • DK series P118

DIN RAIL MOUNTING BASE
DRA • DRT series P1-4, 7-10

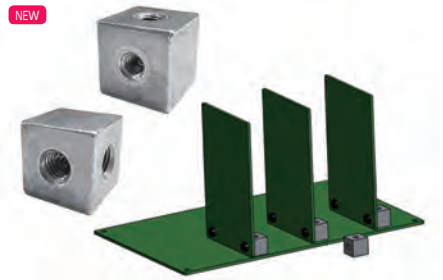

CUBE STANDOFF
CUBE series P120

PHOTO INDEX

= Conductive = Heat Resistant

PLASTIC ENCLOSURE ACCESSORIES

ADHESIVE STANDOFF
AST • ASR series P121

TAPPING STANDOFF
TPS series P122

PCB MOUNTING SCREW • TORX SCREW
EM • MR series P123

BATTERY HOLDERS

LITHIUM BATTERY HOLDER
CR2 • CR123A series P124

EMBEDDED BATTERY BOX
BC series P125-128

Raspberry Pi CASE and ACCESSORIES

Raspberry Pi 4B HEAT-SINK ALUMINIUM CASE
RPH series P129-132

Raspberry Pi ALUMINIUM CASE
RPI series P133-134

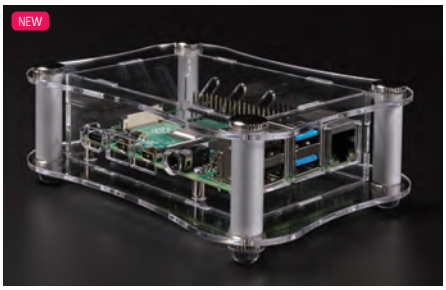

Raspberry Pi 4B ACRYLIC CASE
RPA series P135-136

DIN RAIL MOUNT Raspberry Pi HEAT-SINK CASE
RPHD series P129-130, 137-138

EXPANSION PCB • PIN SOCKET CONNECTOR
RPCB-4B • RPS series P139-140

HEXAGONAL SPACER • MOUNTING SCREW
RPSP2.5-11 • MT2.5-4 P140

ALUMINIUM ENCLOSURES

HIGH-END DESIGN ALUMINIUM CASE
HD series P141-144

ARC DESIGN ALUMINIUM CASE
ALR series P145-148

ALUMINIUM ENCLOSURE
AU series P149-154, 179-180

PHOTO INDEX

= EMC Shielding Effect

ALUMINIUM ENCLOSURES

NEW

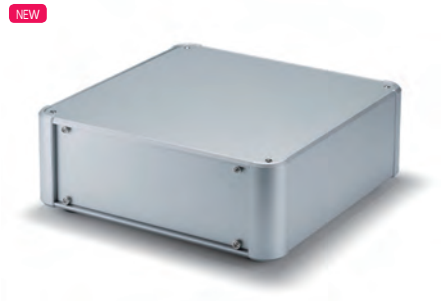

ALUMINIUM ENCLOSURE with DETACHABLE PANELS
AUP series P149-150, 155-158, 179-180

NEW

EMC SHIELDED ENCLOSURE with DETACHABLE PANELS
AUPE series P149-150, 159-162, 179-180

NEW

ALUMINIUM CONTROL BOX
AUX series 149-150, 163-166, 179-180

NEW

EMC SHIELDED ALUMINIUM CONTROL BOX
AUXE series P149-150, 167-170, 179-180

NEW

ALUMINIUM ENCLOSURE with CORNER GUARD
AUG series P149-150, 171-174, 179-180

NEW

EMC SHIELDED ALUMINIUM ENCLOSURE with CORNER GUARD
AUGE series P149-150, 175-180

FLANGED NETWORK ALUMINIUM ENCLOSURE
MXF series P183-188, 195-196

ALUMINIUM MOBILE ENCLOSURE with SILICONE BAND
MXB series P183-186, 188-190, 195-196

ALUMINIUM MOBILE ENCLOSURE
MXA series P183-186, 191-192, 195-196

MOBILE ENCLOSURE
MX series P183-186, 193-196

NEW

ALUMINIUM PANEL CASE with TILT LEG
EXPT series P197-202, 217-220

NEW SIZE

ALUMINIUM PANEL CASE with CORNER GUARD
EXP series P197-200, 203-204, 217-220

NEW SIZE

ALUMINIUM EMC SHIELDED CASE with CORNER GUARD
EXPE series P197-200, 205-206, 217-220

IP65

IP65 ALUMINIUM CASE with CORNER GUARD
EXW series P197-200, 207-208, 217-220

FLANGED ALUMINIUM PANEL CASE
EXPF series P197-200, 209-210, 217-220

PHOTO INDEX

= EMC Shielding Effect = Conductive = Heat Resistant

ALUMINIUM ENCLOSURES

FLANGED ALUMINIUM EMC SHIELDED CASE
EXEF series P197-200, 211-212, 217-220

IP65 IP54 NEW SIZE

IP65 FLANGED ALUMINIUM CASE
EXWF series P197-200, 213-214, 217-220

NEW SIZE

EXTRUDED ALUMINIUM CASE
EX series P197-200, 215-220, 254

IP68

IP68 FLANGED ALUMINIUM ENCLOSURE
AW series P223-226, 235-236, 238

IP68

IP68 HEAT-SINK ALUMINIUM ENCLOSURE
AWN series P223-224, 227-228, 235-238

IP68

IP68 ALUMINIUM ENCLOSURE with SILICONE PROTECTOR
AWP series P223-224, 229-230, 235-236, 238

HEAT-SINK ALUMINIUM ENCLOSURE
AWA series P231-236, 238

NEW SIZE

HEAT-SINK ALUMINIUM ENCLOSURE
EXH series P239-244, 251-254

NEW

HEAT-SINK ALUMINIUM EMC SHIELDED ENCLOSURE
EXHE series P239-242, 245-246, 251-254

NEW SIZE

FLANGED HEAT-SINK ALUMINIUM ENCLOSURE
EXHF series P239-242, 247-248, 251-253

NEW

FLANGED HEAT-SINK ALUMINIUM EMC SHIELDED ENCLOSURE
EXHFE series P239-242, 249-253

HEAT-SINK ALUMINIUM ENCLOSURE
HY series P255-258

UNIVERSAL ALUMINIUM CASE
UC series P259-262

UNIVERSAL ALUMINIUM CASE with CORNER GUARD
UCG series P263-264

ALUMINIUM CASE with CORNER GUARD
MCG series P265-266

PHOTO INDEX

= Conductive

ALUMINIUM ENCLOSURES

ALUMINIUM CONTROL BOX
FC series P267-274, 279-282

OPEN-CLOSING CONTROL BOX
FCW series P267-268, 275-282

DESKTOP ENCLOSURE
MS series P283-291

DIECAST ALUMINIUM BOX
TD series P297-298

IP67

IP67 DIECAST ALUMINIUM BOX
BDN series P299-300

ACCESSORIES

WALL MOUNT SUPPORT ARM
MAR series P181-182

TILT LEG
TLW series P222

TILT LEG
TL series P291

CABLE HOOK
CBF-1G P291

ALUMINIUM ISOLATION FEET
AFS • AFM series P293-294

PLATED PLASTIC FEET • ALUMINIUM FEET
RS • TC series P295

ADHESIVE RUBBER FEET • POLYURETHANE RUBBER FEET
TB • SJ-P series P296

NEW

STAINLESS STEEL POLE MOUNTING STRAP
SNB series P323

POLE MOUNTING BELT
PKB series P324

PHOTO INDEX

IP65 PLASTIC BOX

IP65 LATCH-HINGED PLASTIC BOX
BCAP • BCPC series P301-306, 311-322

IP65 POLYCARBONATE PLASTIB BOX with LOCK
BCPK series P301-304, 307-308, 311-322

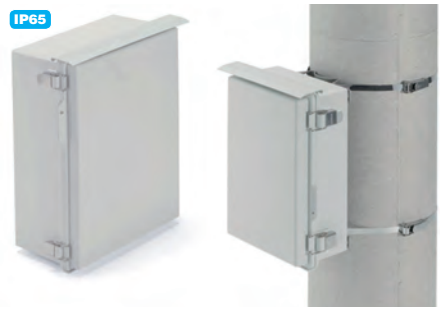

IP65 PLASTIC BOX with OUTDOOR ROOF
BCAR • BCPR series P301-304, 309-322

IP65 PLASTIC SWITCH BOX
BCSB series P329-330

EXCLUSIVE CABLE GLAND for BCSB
B131210G P330

IP65 TERMINAL JUNCTION BOX
TMC series P331-332

VENTILATION PARTS • CABLE GLANDS

PROTECTIVE VENT
PMF series P325-326

ADHESIVE PROTECTIVE VENT FILTER
VE8 series P327

VENTILATION LOUVER • VENTILATION PARTS
V • VF series P328

WEATHERPROOF CABLE GLAND
RMW series P333-334

POLYAMIDE CABLE GLAND
RM series P335

STRAIN RELIEF CABLE GLAND
RSP series P336

HIGH WATER PROTECTION CABLE GLAND
AG series P337-338

METAL CABLE GLAND
AGM series P339-340

PHOTO INDEX

BLIND PLUGS • CONNECTOR COVERS

USB DUST COVER FLAP
CJCV series P341

USB DUSTPROOF BLIND PLUG
USBC series P1-4, 7-10

USB DUSTPROOF CONNECTOR COVER
KPS • USB3C series P342

D-SUB • DVI DUSTPROOF CONNECTOR COVER
DTC series P343

POWER INLET DUSTPROOF BLIND PLUG
PLC-3TV P343

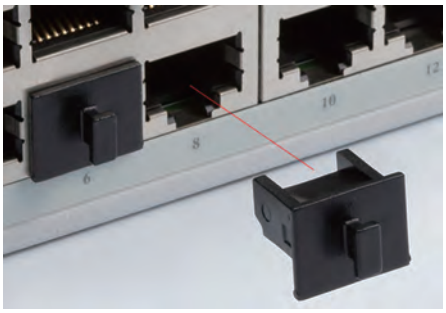

RJ45 DUSTPROOF BLIND PLUG
PJR-45 • PJS-45 P343

RJ45 DUSTPROOF CONNECTOR COVER
PJCV-1 P343

FIBER OPTIC PORT DUSTPROOF PLUG
SFPC • CXP series P344

HDMI DUSTPROOF BLIND PLUG
HDMIC series P344

HDMI DUSTPROOF CONNECTOR COVER
HDMIT-1 P344

IP68
HIGH PERFORMANCE

Outdoor Waterproof Box for 5G Technology!

WG series

IP68 High performance at 24-hours/1m-depth immersion

*Do not use underwater/underground.

With a silicone waterproof gasket, and supported by multiple enclosing screws from the rear side, it allows the enclosure to maintain a stable high waterproofing capability.

Weather-resistant ASA material

ASA material is resistant to deterioration and discoloration due to ultraviolet rays. Perfect for outdoor communication or network devices.

Captive screws for easy maintenance

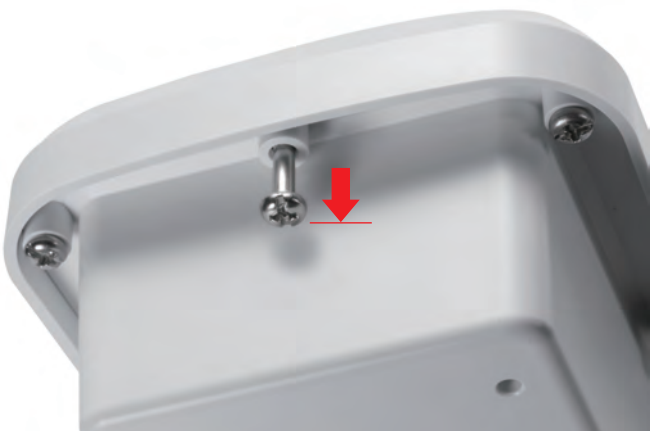

There is no risk of screws dropping out and lost during maintenance. Captive screw is able to lock into a pre-drilled hole to provide a secure hold.

Easy installation on walls & poles

By using the optional mounting accessories, it can be installed on walls and poles with ease.

Optional terminal blocks compatible

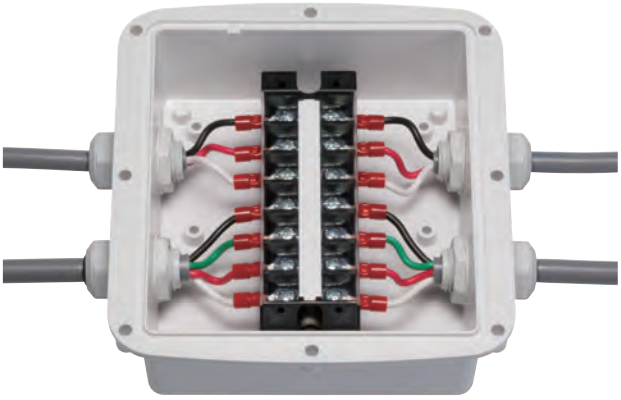

Optional terminal blocks, WTB series can be installed onto the existing bosses inside the WG series box without additional processing or customization, hence can also function as a terminal junction box. (See page 8 for WTB terminal blocks.)

WGV series - Pressure equalization models with ventilation plug

Ventilation plug protects the enclosure from deformation by equalizing pressure in environments where there are differences between strong daytime and low nighttime temperatures, as well as venting the gas generated within.
See page 5 ~ 6 for WGV series equipped with built-in ventilation plug.

Ventilation plugs are also available separately.
See page 325 ~ 326 for ventilation plugs.

WG series IP68 HIGH PERFORMANCE WATERPROOF BOX

NEW

- IP68 high performance plastic box protected from immersion as long as 24 hours at 1m depth.
- ASA material is resistant to deterioration and discoloration from ultraviolet rays.
  Perfect for use as outdoor communication or network devices.
- Self-tapping captive screws which are able to lock into a pre-drilled hole and provide a secure hold for fastening the cover. Please drive the self-tapping captive screws for cutting a thread into the holes at first so that securing the cover and body together properly.

IP68

Technical Data

Protection class :
IP68 (24-hours/1m-depth)
Operating temperature :
-30°C ~ +60°C
Recommended torque :
0.5 ~ 0.6N • m

*May become brittle and break under impact when temperature is lowered close to -30°C.

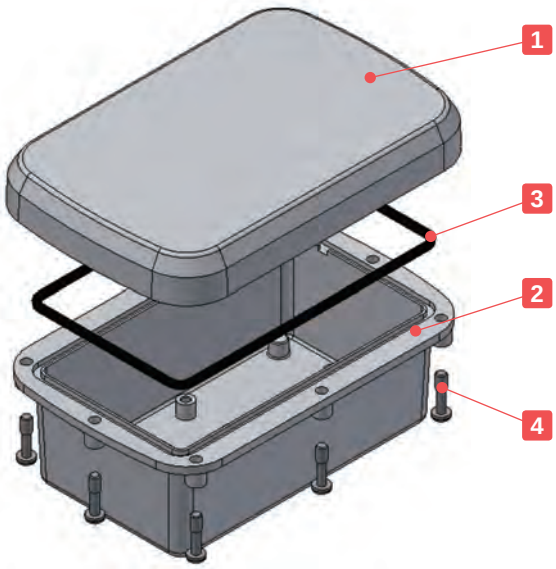

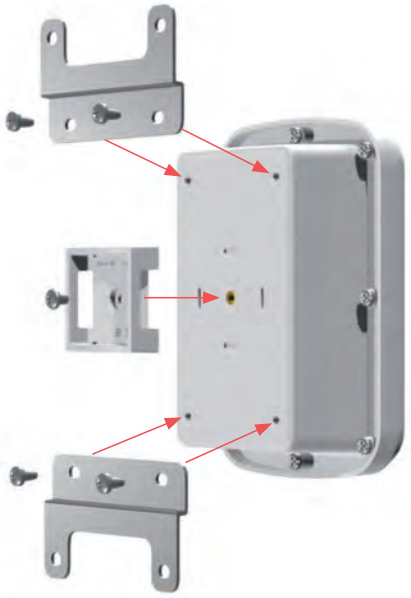

There are 5 holes on the backside of the body (4 at each corner, 1 in center). 4 corner holes are for wall mounting bracket, and 1 center hole is for pole mounting bracket.

Components

No.	Part name	Pcs	Material / Color
1	Cover	1	ASA UL94HB / Off-white
2	Body	1	ASA UL94HB / Off-white
3	Gasket	1	Silicone / Black
4	Self-tapping captive screw	8 ~ 10	Stainless steel / Unfinished

WG dimensions

■ DXF/DWG/PDF/STP drawings available on our website.

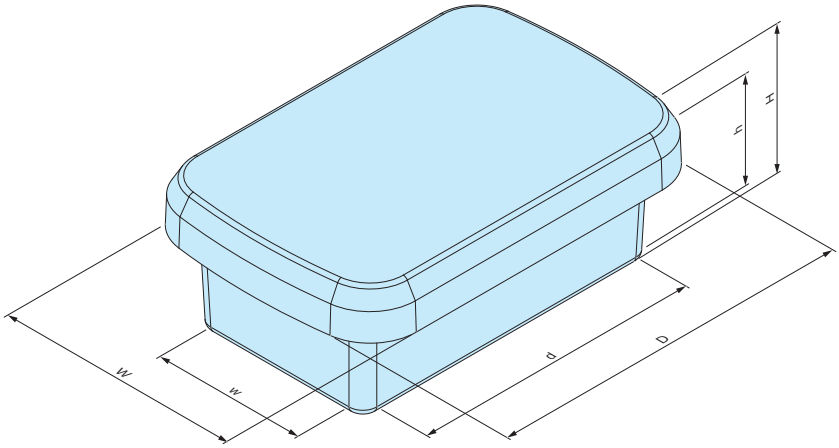

Product no. / Dimensions

Product no.	External dimensions			Internal dimensions			Screw	Weight (g)
	W	D	H	w	d	h		
WG10-15-6W	100	150	55	63	115	43	M4 × 8 pcs	169.5
WG10-15-8W	100	150	75	62	114	63	M4 × 8 pcs	192
WG15-16-6W	145	155	55	107	120	43	M4 × 8 pcs	232
WG15-16-8W	145	155	80	105	118	68	M4 × 8 pcs	266.5
WG15-21-6W	145	210	60	107	174	48	M4 × 10 pcs	314
WG15-21-9W	145	210	90	105	172	78	M4 × 10 pcs	367

Accessories (Optional parts)

Wall mounting bracket WGF series
See page 9

Pole mount bracket WGMB • WPMB series
See page 9 ~ 10

Pole mounting belt SNB • PKB series
See page 323 ~ 324

PCB mounting screw MT4-8T
See page 7

Tapping standoff TPS series
See page 122

Protective vent PMF series
See page 325 ~ 326

Cable gland
See page 333 ~ 340

Mounting plate WGP series
See page 7

DIN rail FDR series
See website

Terminal block WTB series
See page 8

WGV series IP68 PLASTIC ENCLOSURE with VENTILATION PLUG

NEW

- IP68 high performance plastic box protected from immersion as long as 24 hours at 1m depth where external (surroundings) and internal (inside box) pressure are different.
- ASA material is resistant to deterioration and discoloration from ultraviolet rays. Perfect for use as outdoor communication or network devices.
- Self-tapping captive screws which are able to lock into a pre-drilled hole and provide a secure hold for fastening the cover. Please drive the self-tapping captive screws for cutting a thread into the holes at first so that securing the cover and body together properly.

IP68

Technical Data

Protection class :
IP68 (24-hours/1m-depth)
Operating temperature :
-30°C ~ +60°C
Recommended torque :
0.5 ~ 0.6N • m
Ventilation plug recommended torque :
0.6 ~ 0.8N • m

*May become brittle and break under impact when temperature is lowered close to -30°C.

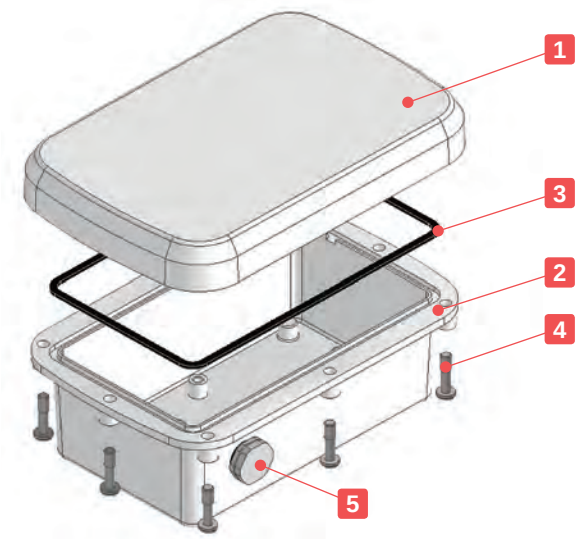

Ventilation plug protects the enclosure from deformation by equalizing pressure in environments where there are differences between strong daytime and low nighttime temperatures, as well as venting the gas generated within.

Components

No.	Part name	Pcs	Material / Color
1	Cover	1	ASA UL94HB / Off-white
2	Body	1	ASA UL94HB / Off-white
3	Gasket	1	Silicone / Black
4	Self-tapping captive screw	8 ~ 10	Stainless steel / Unfinished
5	Ventilation plug	1	PA66 + PA6 • PTFE / Light gray

WGV dimensions

■ DXF/DWG/PDF/STP drawings available on our website.

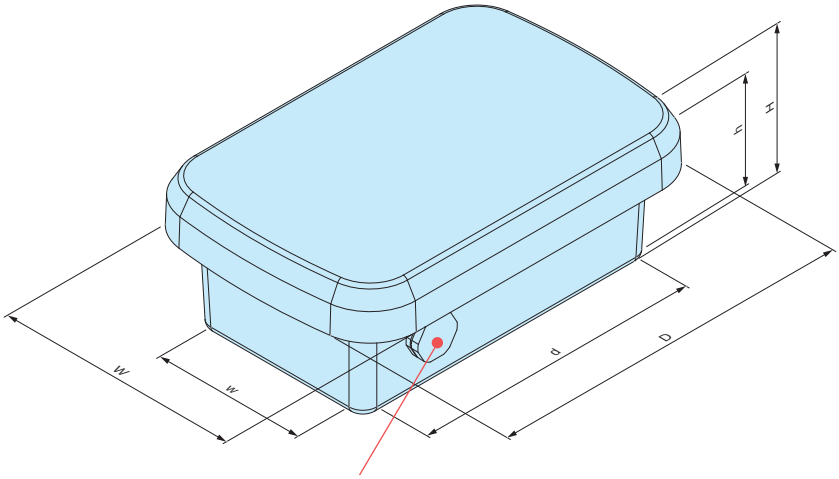

The location of the ventilation plug is pre-fixed.
*Customization for location change possible.

Product no. / Dimensions

Product no.	External dimensions			Internal dimensions			Screw	Weight (g)
	W	D	H	w	d	h		
WGV10-15-6W	100	150	55	58	115	43	M4 × 8 pcs	171
WGV10-15-8W	100	150	75	57	114	63	M4 × 8 pcs	193.5
WGV15-16-6W	145	155	55	102	120	43	M4 × 8 pcs	233.5
WGV15-16-8W	145	155	80	100	118	68	M4 × 8 pcs	268
WGV15-21-6W	145	210	60	102	174	48	M4 × 10 pcs	315.5
WGV15-21-9W	145	210	90	100	172	78	M4 × 10 pcs	368.5

Accessories (Optional parts)

Wall mounting bracket WGF series
See page 9

Pole mount bracket WGMB • WPMB series
See page 9 ~ 10

Pole mounting belt SNB • PKB series
See page 323 ~ 324

PCB mounting screw MT4-8T
See page 7

Tapping standoff TPS series
See page 122

Cable gland
See page 333 ~ 340

Terminal block WTB series
See page 8

Mounting plate WGP series
See page 7

DIN rail FDR series
See website

WGP series MOUNTING PLATE for WG • WGV

NEW

WGP dimensions

■ DXF/DWG/PDF/STP drawings available on our website.

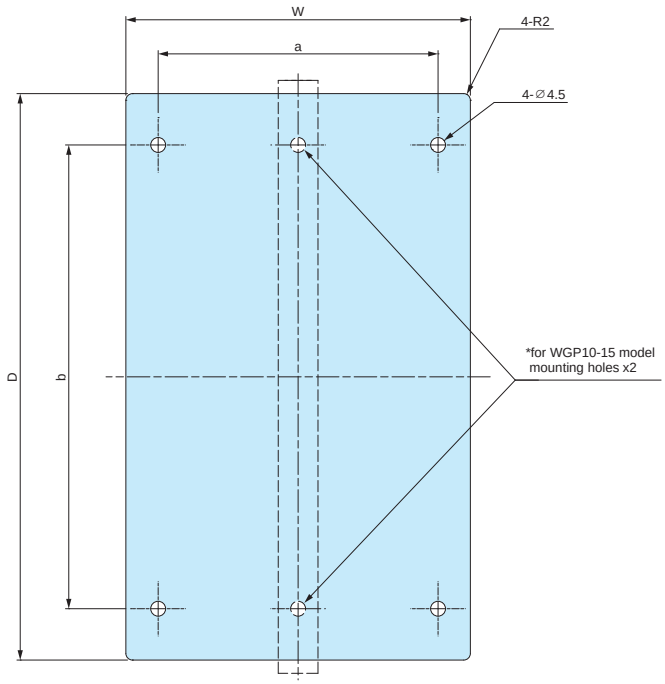

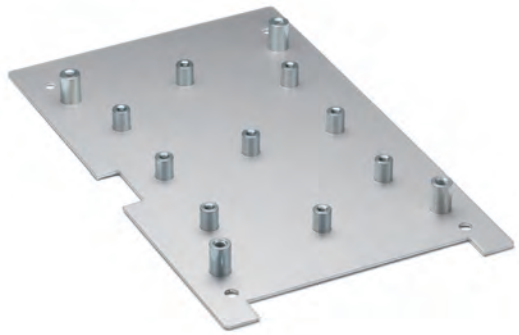

■ Hole milling, clinching spacer customizations are available.
See page Custom-7 ~ Custom-10 and our website for more details.

■ Material / Finish : A1100P (t=1.5mm) / Silver anodized

Product no. / Dimensions

■ Mounting screws included.

Product no.	W	D	a	b	Suitable models	Weight (g)
WGP10-15	60	112	–	97	WG • WGV10-15-6, WG • WGV10-15-8	30
WGP15-16	105	117	84.5	90	WG • WGV15-16-6, WG • WGV15-16-8	54
WGP15-21	104	171	84.5	140	WG • WGV15-21-6, WG • WGV15-21-9	76

MT4-8T PCB MOUNTING SCREW

■ Self-tapping screws for board mounting on bosses inside WG and WGV series enclosures.

Product no. / Dimensions

Product no.	Material	Finish	Pack of
MT4-8T (Bind tapping M4-8)	Steel	Trivalent chromate	20

WTB series TERMINAL BLOCK for WG • WGV

NEW

(FW2)

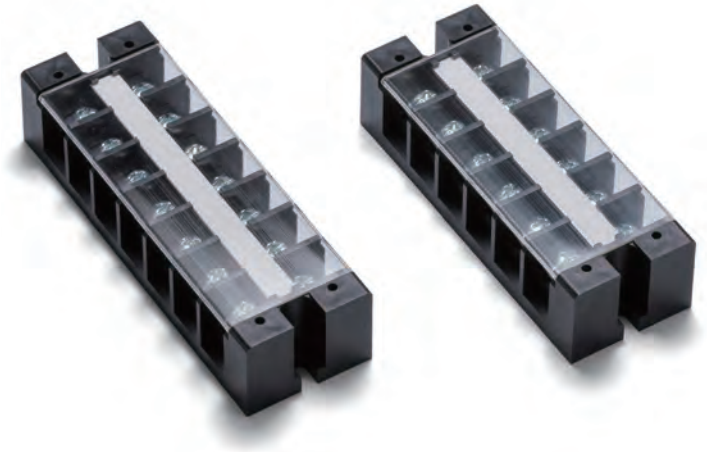

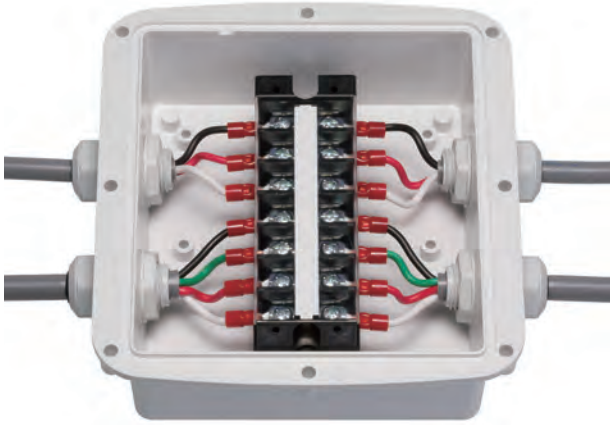

■ Compatible terminal blocks for WG • WGV series.

Components

No.	Part name	Pcs	Material	Color or Finish
1	Base	1	PBT UL94V-0	Black
2	Conductive plate	1	Brass	Nickel plated
3	Terminal screw (M4-10)	2 x P	Steel	Trivalent chromate
4	Symbol board	1	PET	White
5	Cover	1	Polycarbonate UL94V-0	Transparent
—	Screw (Bind tapping M4-10)	2	Steel	Trivalent chromate

Specification

1. Electrical Rating 600V • 35A
2. Insulation Resistance DC500V 1000MΩ ~
3. Withstand Voltage AC2500V (Tested for 1 min.)
4. Rising Temp. 30°C or less
5. Operating Temp. Range -40°C ~ +90°C
6. Storage Temp. Range -40°C ~ +90°C

WTB dimensions

■ DXF/DWG/PDF drawings available on our website.

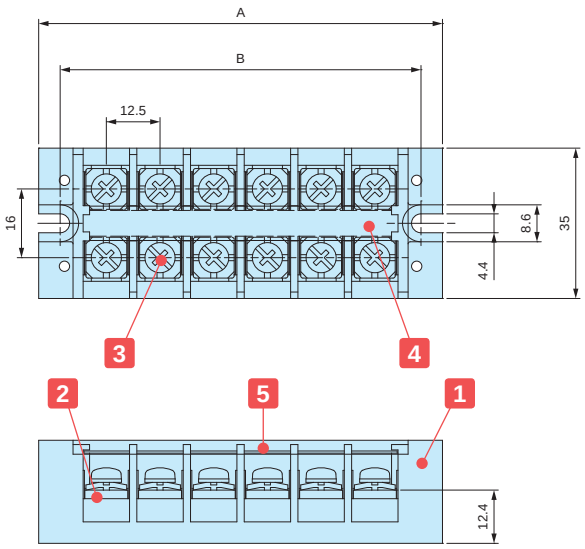

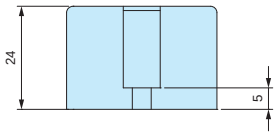

Product no. / Dimensions

Product no.	P (Number of poles)	A	B	Suitable models
WTB-240- 3P-FB	3	56.5	46.5	WG • WGV10-15-□ (W direction)
WTB-240- 6P-FB	6	94.0	84.0	WG • WGV15-16-□, WG • WGV15-21-□ (W direction)
WTB-240- 7P-FB	7	106.5	96.5	WG • WGV10-15-□, WG • WGV15-16-□ (D direction)
WTB-240-10P-FB	10	144.0	134.0	WG • WGV15-21-□ (D direction)

WGF series WALL MOUNTING BRACKET for WG • WGV

NEW

WGF dimensions

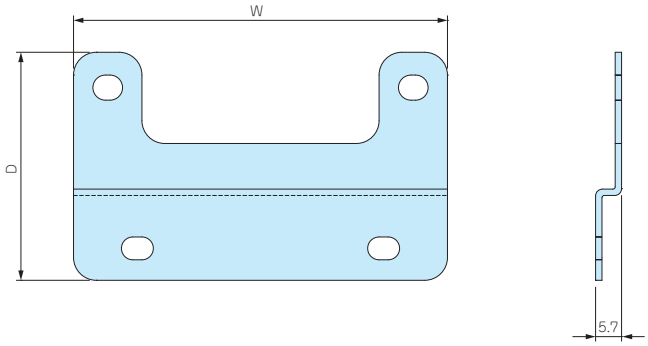

■ DXF/DWG/PDF/STP drawings available on our website.

Product no. / Dimensions

■ Stainless steel mounting screws included.

Product no.	W	D	Suitable models	Material / Finish	Pack of
WGF-10	82	50	WG • WGV10-15-□ (W direction)	Stainless steel t=1.5mm / Barrel finish	2
WGF-15	132	50	WG • WGV10-15-□ (D direction) WG • WGV15-21-□ (W direction) WG • WGV15-16-□ (W • D direction)		2

WGMB series POLE MOUNTING BRACKET for WG • WGV

NEW

WGMB dimensions

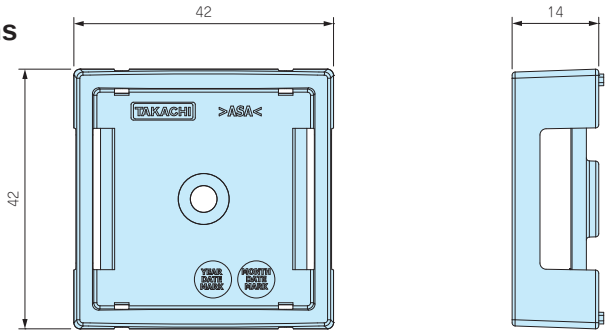

■ Pole mount bracket made from weather resistant ASA material.

■ Hole milling is not required when installing the mount bracket, thus allowing the enclosure to maintain its IP rating.

■ WG • WGV10-15-□ and 15-16-□ can be installed in both the W or D direction.

■ Pole mount is possible with the use of SNB or PKB series mounting belt. (See page 323 ~ 324)

■ DXF/DWG/PDF/STP drawings available on our website.

Product no. / Dimensions

Product no.	Suitable models	Material / Color	Weight (g)	Pack of
WGMB-1W	WG • WGV10-15-□ WG • WGV15-16-□- (1 pc required) WG • WGV15-21-□- (2 pcs required)	ASA UL94-HB / Off-white	9	1

Installation example

Installation (1 pc)

Installation (2 pcs)

WPMB-M4-2 POLE MOUNTING BRACKET

WPMB-M4-2 dimensions

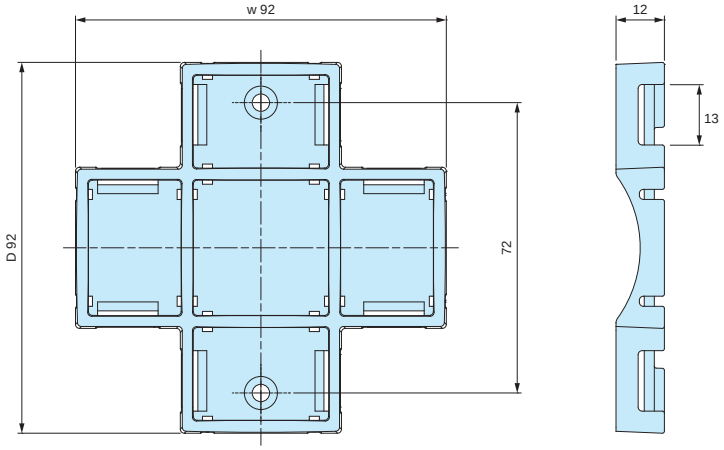

■ DXF/DWG/PDF/STP drawings available on our website.

■ Pole mount bracket made from weather resistant ASA material.

■ Pole mounting belt can be installed either W or D direction.

■ Pole mount is possible with the use of PKB series mounting belt. (See page 324)

■ Hole milling is not required when installing the mount bracket, thus allowing the enclosure to maintain its protection class.

*Stainless steel screw belt SNB series is not usable on WPMB-M4-2 series.

Color
White gray

Product no. / Dimensions

Product no.	Suitable models	Recommended torque (N • m)	Weight (g)	Pack of
WPMB-M4-2G	WG • WGV15-21-6, WG • WGV15-21-9	0.45 ~ 0.5	24	1

■ Recommended torque listed is for reference only; actual may differ. Assemble after testing torque.

Installation example

Vertical mounting

Horizontal mounting

ECONOMICAL OUTDOOR NETWORK BOX

Unique construction rainproof box

OB series

REASONS for ECONOMICAL

1. No Gasket required by the unique construction

2. Wall/Pole bracket integrated

Unique seamless construction

No rain entry by the seamless construction without gasket nor joint.

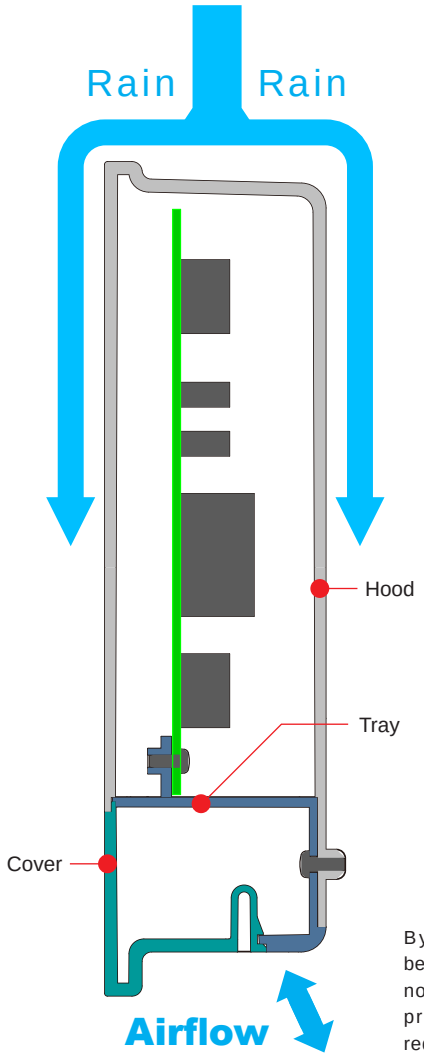

By having a slight gap between the cover and tray, no ventilation plug for the pressure equalization is required.

Wall • Pole mounting bracket integrated

The slit of the integrated bracket in the backside can hold the pole mounting belts. And the hanging holes can be utilize for wall mounting.

Weather-resistant ASA material

ASA material is resistant to deterioration and discoloration from ultraviolet rays. Perfect for use as outdoor communication or network devices.

How to install PCB • Mounting plate

1) Fix PCB or mounting plate on the tray with screws.

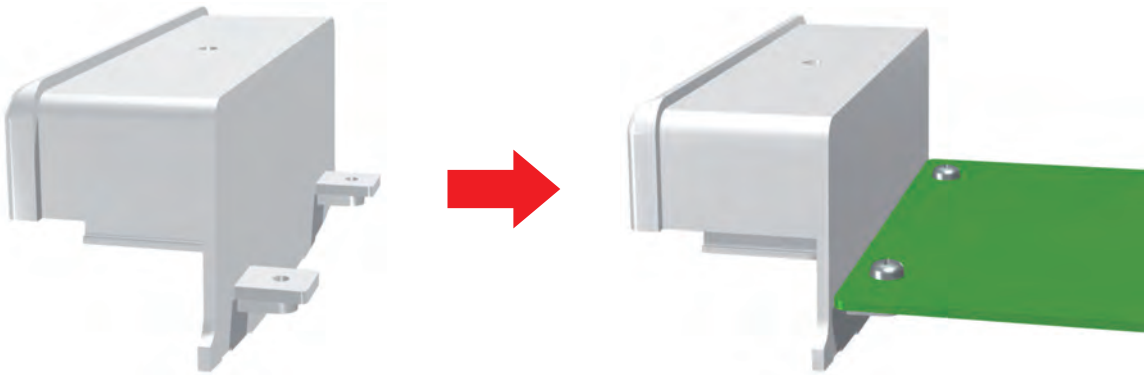

2) Push PCB or mounting plate fixed on the tray all the way along the grooves on inside of the hood into.

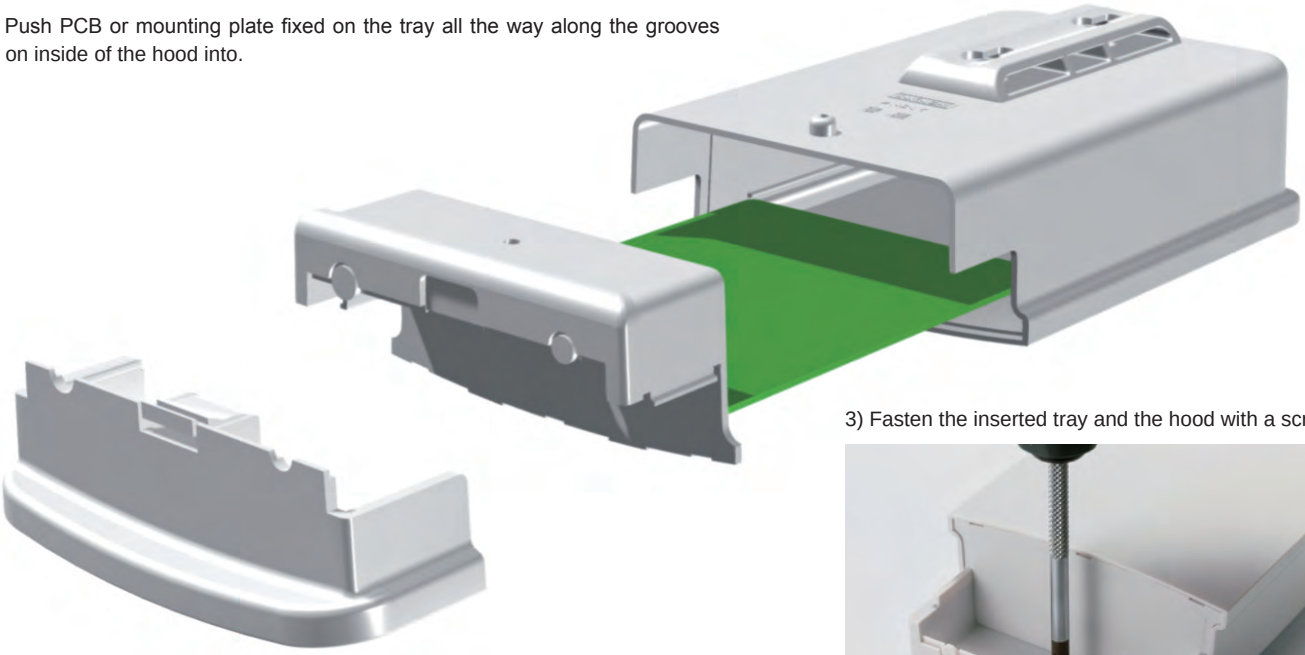

3) Fasten the inserted tray and the hood with a screw.

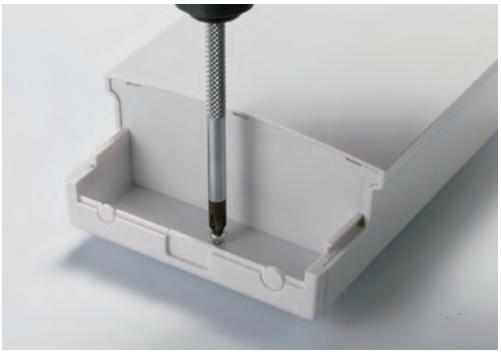

Easy knock-out hole punching & cover replacement

Tray comes with knock-out holes for wiring. Knock-out holes can easily be punched out through with a plier or a nipper.
The cover can be easily removed with one touch, hence it is a excellent structure for performing maintenance.
For wiring, please machine cutout/hole on the side-wall of the tray as shown in the installation example below.

Connecter installation example

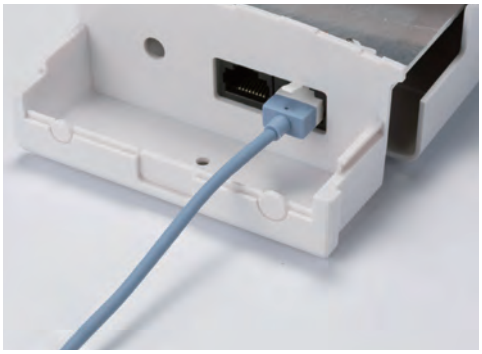

OB series ECONOMICAL OUTDOOR NETWORK BOX

NEW

- Unique seamless construction and rainproof outdoor network box.
  Although it is IP44, it can completely protect the internal components against rain when installed vertically.
- ASA material is resistant to deterioration and discoloration from ultraviolet rays.
  Perfect for use as outdoor communication devices.
- Bracket integrated in the backside equipped with the slits allows for pole mounting belt to be passed through the slit for pole mounting, while the hanging holes enable it to be secured onto wall hooks or brackets.
- Tray comes with knock-out holes for wiring. Knock-out holes can easily be punched out through with a plier or a nipper.

IP44

Technical Data
Protection class : IP44 Operating temperature : -30°C ~ +60°C

*May become brittle and break under impact when temperature is lowered close to -30°C.

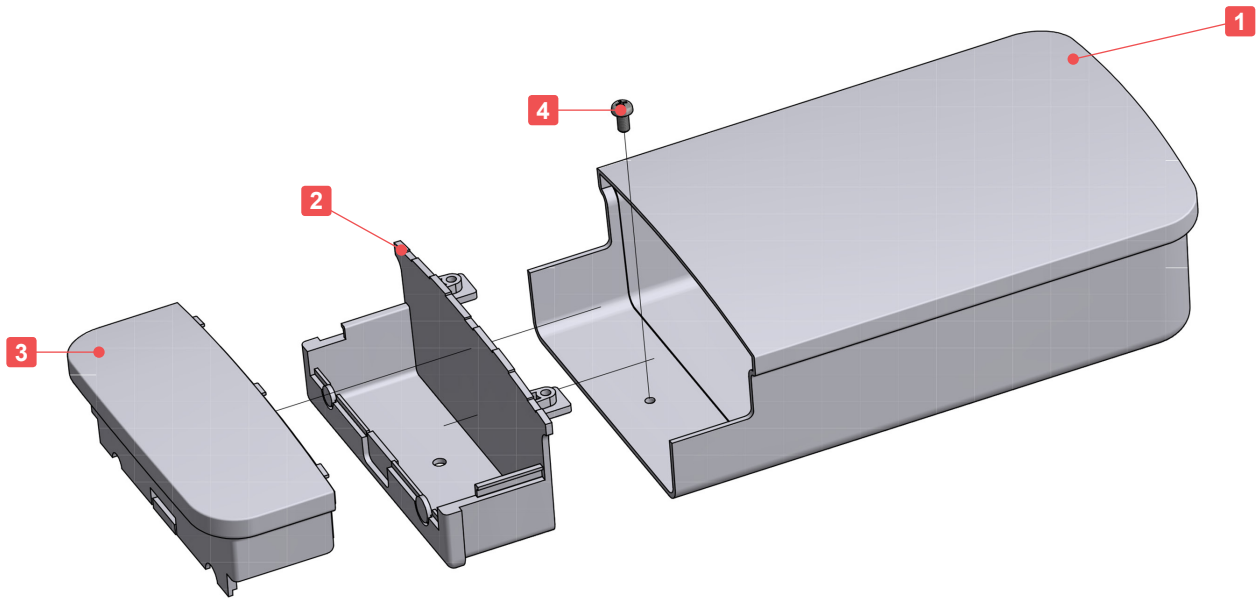

Components

No.	Part name	Pcs	Material / Color
1	Hood	1	ASA UL94HB / Off-white
2	Tray	1	ASA UL94HB / Off-white
3	Cover	1	ASA UL94HB / Off-white
4	Screw (Tray/PCB installation)	3	Stainless steel / Unfinished

OB dimensions

■ DXF/DWG/PDF/STP drawings available on our website.

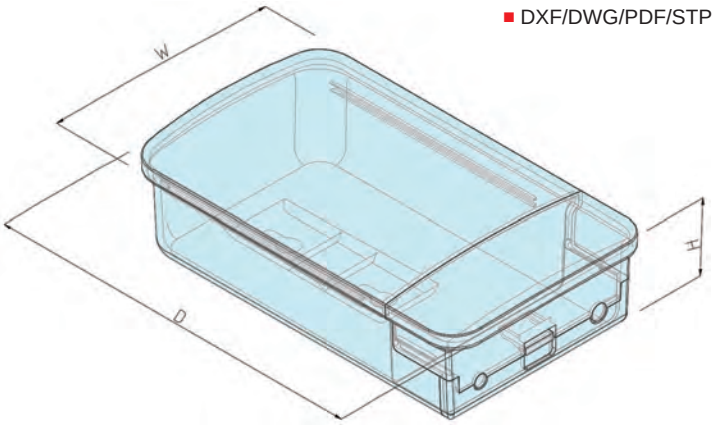

Product no. / Dimensions

Product no.	External dimensions			Knock-out holes
	W	D	H	
OB 8-14-4W	75	140	35	5.6Φ x1 • 7.2Φ x1
OB10-17-5W	100	170	45	5.6Φ x1 • 7.2Φ x1
OB13-21-6W	125	210	55	7Φ x1 • 10Φ x1

Accessories (Optional parts)

Pole mounting belt SNB • PKB series
See page 323 ~ 324

Mounting plate OBP series
See page 14

Accessories (Optional parts)

OBP series MOUNTING PLATE for OB

NEW

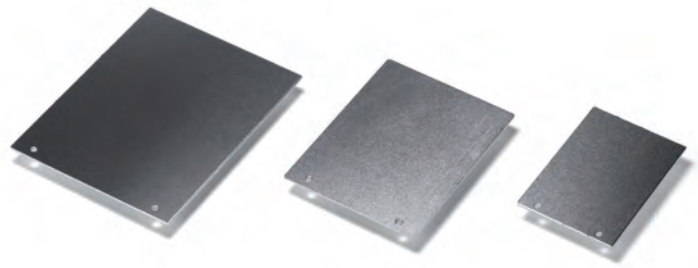

■ Material / Finish : A1050P / Unfinished
■ Aluminium mounting plate for OB series outdoor network box.
■ Recommended to be used for installing network module, sensor, terminal block, etc.

OBP dimensions

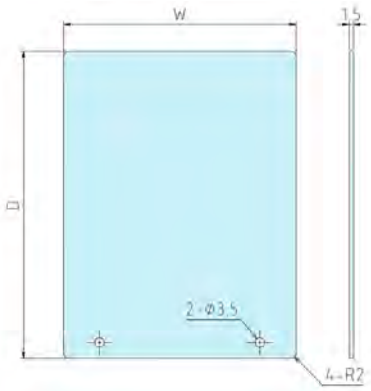

Product no. / Dimensions

Product no.	W	D	Suitable models	Weight (g)
OBP8-14	61.2	92	OB 8-14-4W	22.5
OBP10-17	87.1	115	OB10-17-5W	40
OBP13-21	110	137	OB13-21-6W	61

■ DXF/DWG/PDF drawings available on our website.

IP67 / IP68 UV-PROTECT NETWORK PLASTIC BOX

WP series

Waterproofing ability by using silicone gasket

Highly elastic and durable silicone gasket for high waterproof ability. The use of insert nuts allows the unit to retain its waterproof ability even after multiple opening and closing.

Weather-resistant ASA material

The white gray "G" type utilize a UV resistant, durable ASA material. Recommended for outdoor usage as a communication device type equipment.

Outdoors Use Example
IT Sensor Data Logger

Easy installation on walls

Easy mounting onto walls by opening the blind lids. A clean and sleek appearance can be maintained as screws are hidden away by the blind lids.

Easy installation on electrical poles

By using a pole mounting accessory, it can be attached to poles with ease.

Information on waterproofing after hole milling for switches

The waterproof performance will be lost once hole or cutout is milling on IP rated enclosure.
To ensure it remains waterproof after hole/cutout milling, IP rated membrane pad or overlay is required.

Product by Arrow7 (Japan)

WP series APPLICATION EXAMPLE

Outdoor Lighting Remote Controller

Product by GrowFlux (USA)

Leak Guard - Home Water Leak Detector

Product by Veimart (Finland)

Clay Pigeon Shooting Controller

Product by Viktor Gajadacs (Hungary)

Wireless Temperature / Humidity Transmitter

Product by Masibus (India)

WP series APPLICATION EXAMPLE

LoRa Gateway

*LoRa = Long Range Transmission

Product by EASEL (Japan)

IoT Sensor Data Logger for Agriculture

Product by Nishimu Electronics Industries (Japan)

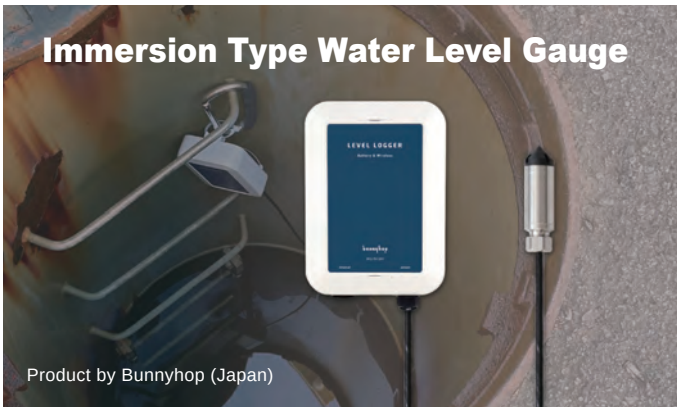

Immersion Type Water Level Gauge

Product by Bunnyhop (Japan)

Outdoor Cloud Data Logger

Product by
Smart Logic (Japan)

Detection Sensor for Bird/Beast Trap

Product by MASPRO (Japan)

Crane Expansion Sensor

Product by mSOLUTIONS (Hong Kong)

Wireless Indoor Air Monitoring System

Product by Pietiko (Finland)

LoRa WAN Pressure Transmitter

Product by ellenex (Australia)

Sigfox Multi Sensor

Product by OMICRON (Columbia)

Network Sensor for Agriculture

Product by Demand Side Instruments (France)

Argonomic Parameter Surveillance Unit

Product by Argotec (Spain)

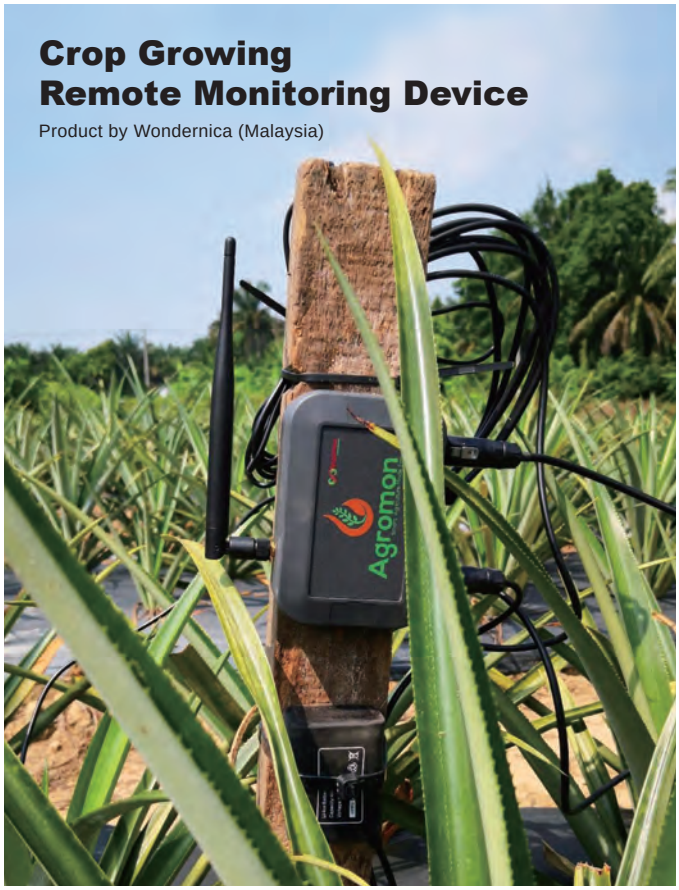

Crop Growing Remote Monitoring Device

Product by Wondernica (Malaysia)

Bird/Beast Damage Control Sensor

Product by Kyowa Techno (Japan)

WP series IP67 / IP68 NETWORK PLASTIC BOX

- IP68 (IP67 for WP20-28-◯) high performance plastic box protected from immersion as long as 24 hours at 1m depth.
- 24 different sizes available in white gray UV-resistant ASA and charcoal gray flame-resistant ABS. Recommended for use as outdoor communication or network devices.
- Mount on walls or brackets by simply opening the blind lids.
- Pole mounting is possible via an optional pole mounting bracket accessory.

IP67 IP68

Technical Data

Protection class :
IP68 (24-hours/1m-depth)
WP20-28-5□ } IP67
WP20-28-7□ } IP67
Operating temperature :
Models = 5-7-□ ~ 20-20-□:
ASA[1]-20 ~ +60°C
ABS -10 ~ +50°C
Models = 20-28-□[2] :
ASA[1]-20 ~ +55°C
ABS -10 ~ +45°C

[1] May become brittle and break under impact when temperature is lowered close to -20°C.
[2] Usage of the PMF series protective vent will raise the temperature limit for ASA and ABS to +60°C and +50°C respectively.
※Refer to page 23 for more information.

WP5-7-2 ~ WP13-18-5

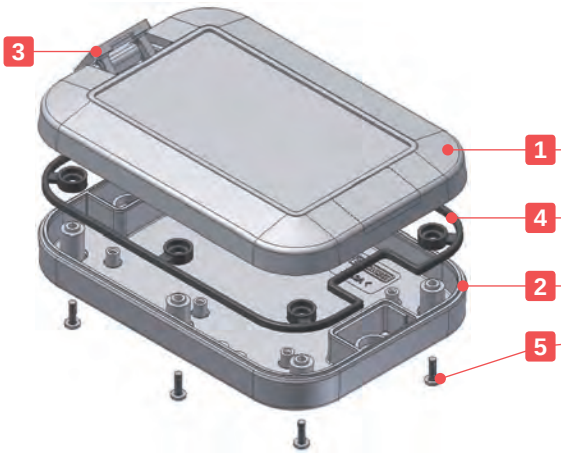

WP15-15-4 ~ WP20-28-7

Components

No.	Part name	Pcs	Material / Color
1	Top cover	1	ASA UL94HB / White gray : Flame-resistant ABS UL94V-0 / Charcoal gray
2	Bottom base	1	ASA UL94HB / White gray : Flame-resistant ABS UL94V-0 / Charcoal gray
3	Blind lids	2	ASA UL94HB / White gray : Flame-resistant ABS UL94V-0 / Charcoal gray
4	Gasket	1	Silicone / Black
5	Screw	4 ~ 8	Stainless steel binding head screw / Unfinished

WP dimensions

■ DXF/DWG/PDF/STP drawings available on our website.

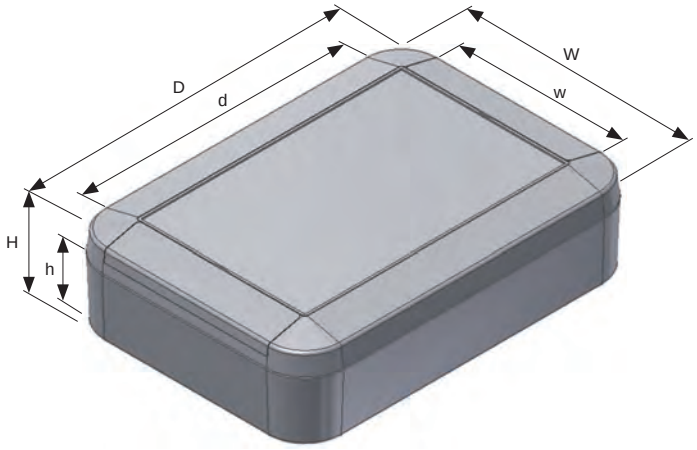

Product no. / Dimensions

Product no.		IP Code	External dimensions			Internal dimensions			Screw	Recommended torque (N • m)	Weight (g)
● White gray (ASA)	● Charcoal gray (ABS)		W	D	H	w	d	h			
WP 5- 7-2G	WP 5- 7-2C	IP68	52	65	18	46	37	13	M2-8 × 4pcs	0.2 ~ 0.25	31.5
WP 5- 7-3G	WP 5- 7-3C	IP68	52	65	27	45	36.5	22	M2-8 × 4pcs	0.2 ~ 0.25	39.5
WP 6- 8-2G	WP 6- 8-2C	IP68	60	80	20	53.5	52	14.7	M2-8 × 4pcs	0.25 ~ 0.3	41.5
WP 6- 8-3G	WP 6- 8-3C	IP68	60	80	30	53	51	24.7	M2-8 × 4pcs	0.25 ~ 0.3	49
WP 8- 8-2G	WP 8- 8-2C	IP68	75	75	22	67	42	16.4	M2.5-8 × 4pcs	0.25 ~ 0.35	57.5
WP 8- 8-4G	WP 8- 8-4C	IP68	75	75	35	66	42	29.4	M2.5-16 × 4pcs	0.25 ~ 0.35	88.5
WP 8-10-2G	WP 8-10-2C	IP68	75	100	22	67	67	16	M2.5-8 × 4pcs	0.25 ~ 0.35	74
WP 8-10-4G	WP 8-10-4C	IP68	75	100	35	66	67	29	M2.5-16 × 4pcs	0.25 ~ 0.35	95
WP 9-13-3G	WP 9-13-3C	IP68	90	130	25	81	91	18	M2.5-8 × 6pcs	0.25 ~ 0.35	113
WP 9-13-4G	WP 9-13-4C	IP68	90	130	40	81	91	33	M2.5-16 × 6pcs	0.25 ~ 0.35	141
WP10-10-3G	WP10-10-3C	IP68	100	100	25	90	61	18	M2.5-8 × 4pcs	0.25 ~ 0.35	96
WP10-10-4G	WP10-10-4C	IP68	100	100	40	90	61	33	M2.5-16 × 4pcs	0.25 ~ 0.35	121
WP11-15-3G	WP11-15-3C	IP68	110	150	27	100	110	20	M2.5-8 × 6pcs	0.25 ~ 0.35	153
WP11-15-4G	WP11-15-4C	IP68	110	150	40	100	110	33	M2.5-16 × 6pcs	0.25 ~ 0.35	181
WP13-18-3G	WP13-18-3C	IP68	130	175	30	120	135	23	M2.5-8 × 6pcs	0.25 ~ 0.35	225
WP13-18-5G	WP13-18-5C	IP68	130	175	45	120	135	38	M2.5-16 × 6pcs	0.25 ~ 0.35	266
WP15-15-4G	WP15-15-4C	IP68	150	150	40	141	100	33.5	M3-8 × 4pcs	0.35 ~ 0.45	239
WP15-15-6G	WP15-15-6C	IP68	150	150	55	140	100	48.5	M3-8 × 4pcs	0.35 ~ 0.45	282.5
WP15-21-4G	WP15-21-4C	IP68	150	210	40	141	160	33.5	M3-8 × 6pcs	0.35 ~ 0.45	323
WP15-21-6G	WP15-21-6C	IP68	150	210	55	140	160	48.5	M3-8 × 6pcs	0.35 ~ 0.45	367.5
WP20-20-5G	WP20-20-5C	IP68	200	200	45	190	150	38.5	M3-8 × 8pcs	0.45 ~ 0.55	446
WP20-20-7G	WP20-20-7C	IP68	200	200	65	189	149	58.5	M3-8 × 8pcs	0.45 ~ 0.55	524.5
WP20-28-5G	WP20-28-5C	IP67	200	280	45	190	230	38.5	M3-8 × 8pcs	0.45 ~ 0.55	557.5
WP20-28-7G	WP20-28-7C	IP67	200	280	65	189	229	58.5	M3-8 × 8pcs	0.45 ~ 0.55	646

■ Recommended torque listed is for reference only; actual may differ. Assemble after testing torque.

Accessories (Optional parts)

Pole mount bracket WPMB series
See page 21

Rubber feet PFRF series
See page 22

TORX screw MR series
See page 22

PCB mounting screw EM series
See page 123

Protective vent PMF series
See page 325 ~ 326

Cable gland
See page 333 ~ 340

Pole mounting belt PKB-10 series
See page 324

Tapping standoff TPS series
See page 122

WPMB series POLE MOUNTING BRACKET for WP

- Pole mount bracket made from weather resistant ASA material.
- Hole milling is not required when installing the mount bracket, thus allowing the enclosure to maintain its IP67 protection.
- WPMB-M4-2 can be used for both vertical and horizontal installation.
- Together with WPMB series, the PKB series mounting belt allows the unit to be mounted onto a pole.

WPMB dimensions

- DXF/DWG/PDF/STP drawings available on our website.

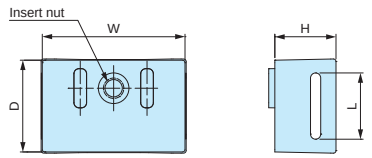

WPMB-M3 • WPMB-M4

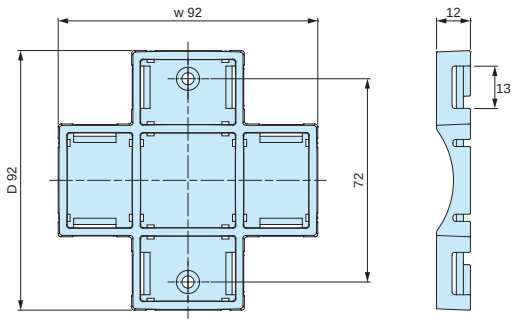

WPMB-M4-2

Color Type

Code	Color
G	White gray
D	Dark gray

Product no. / Dimensions

- Please suffix color code at the end of the product number.

Product no.	Dimensions				Screw	Suitable models	Recommended torque (N • m)	Weight (g)	Pack of
	W	D	H	L					
WPMB-M3□	18	14	9.5	11	Stainless steel M3-6 x 2 pcs	WP5-7-2 • 5-7-3 • 6-8-2 • 6-8-3 • 8-8-2 • 8-8-4 • 8-10-2 • 8-10-4	0.4 ~ 0.45	3	2
WPMB-M4□	28	18	12	13	Stainless steel M4-8 x 2 pcs	WP9-13-3 • 9-13-4 • 10-10-3 • 10-10-4 • 11-15-3 • 11-15-4 • 13-18-3 • 13-18-5	0.45 ~ 0.5	10	2
WPMB-M4-2□	92	92	12	13	Stainless steel M4-6 x 2 pcs	WP15-15-4 • 15-15-6 • 15-21-4 • 15-21-6 • 20-20-5 • 20-20-7 • 20-28-5 • 20-28-7	0.45 ~ 0.5	24	1

- Recommended torque listed is for reference only; actual may differ. Assemble after testing torque.

WPMB-M3 / WPMB-M4

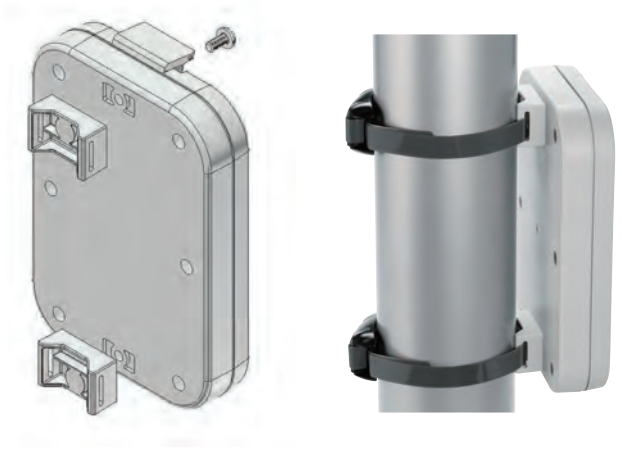

WPMB-M4-2

PFRF series RUBBER FEET

PFRF dimensions

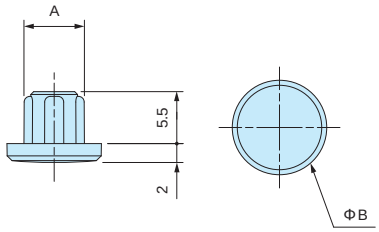

■ STP drawings available on our website.

■ Recommended to be used with WP series as a desktop-type unit.
■ No additional hole milling is required as the rubber feet fits snuggly into the screw holes.
■ Made from elastomer material.
■ Unavailable for use with WP5-7-2, 5-7-3, 6-8-2, and 6-8-3 models.

Product no. / Dimensions

Product no.	Dimensions		Material	Color	Suitable models	Pack of
	A	B				
PFRF-M2.5D	6.4	10	Elastomer UL94HB	Dark gray	WP8-8-2 • 8-8-4 • 8-10-2 • 8-10-4 • 9-13-3 • 9-13-4 • 10-10-3 • 10-10-4 • 11-15-3 • 11-15-4 • 13-18-3 • 13-18-5	4
PFRF-M3D	7.2	11	Elastomer UL94HB	Dark gray	WP15-15-4 • 15-15-6 • 15-21-4 • 15-21-6 • 20-20-5 • 20-20-7 • 20-28-5 • 20-28-7	4

MR series TORX SCREW

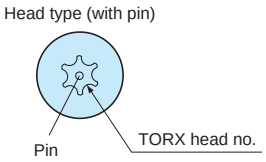

■ Recommended to be used for tamper resistance, or for an elegant look and feel.
■ Requires the use of a specialized screwdriver.
■ Unavailable for use with WP5-7-2, 5-7-3, 6-8-2, and 6-8-3 models.

Product no. / Dimensions

Product no.	Dimensions		TORX head no.	Material	Finish	Suitable models	Pack of
	M	L					
MR2.5-8ST	2.5	8	T 8 (with pin)	Stainless steel	Unfinished	WP8-8-2 • 8-10-2 • 9-13-3 • 10-10-3 • 11-15-3 • 13-18-3/WSC series	20
MR2.5-16ST	2.5	16	T 8 (with pin)	Stainless steel	Unfinished	WP8-8-4 • 8-10-4 • 9-13-4 • 10-10-4 • 11-15-4 • 13-18-5	20
MR3-8ST	3	8	T 10 (with pin)	Stainless steel	Unfinished	WP15-15-4 • 15-15-6 • 15-21-4 • 15-21-6 • 20-20-5 • 20-20-7 • 20-28-5 • 20-28-7	20

Effect of PMF protective vent on WP series box

WP series enclosure comes with a silicone gasket, which allows the enclosure to be airtight when assembled.

When used in environments where there are large temperature fluctuations or differences, the internal and external pressure will become uneven.
If this pressure within is unable to be properly vented, it may cause the enclosure to deform and warp.
By installing the PMF series protective vent, it will assist in equalizing the air pressure, and prevent potential deformation.

Evaluation Target

1. WP20-28-7G - 2 pcs / 2. WP20-28-7G with PMF-12HAS - 2 pcs

Test Conditions

Device : Constant temperature/humidity test chamber - LH43-W14P
Make : NAGANO SCIENCE CO., LTD.
Testing in -20ºC ~ +60ºC (Operating temperature for WP series)
Low Temperature : -20ºC / 96 hours • High Temperature : +60ºC / 96 hours

Test Result

1. WP20-28-7G - 2 pcs

Uneven internal and external pressure causes deformation of the enclosure.

Before

Low Temp. Test

1. First piece

Top • Bottom / Contracted

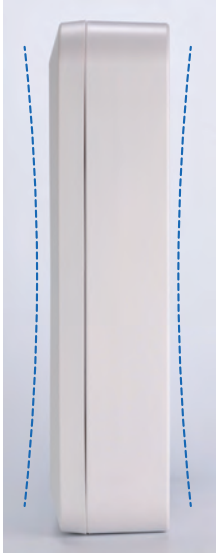

Before

High Temp. Test

1. Second piece

Top • Bottom / Expanded

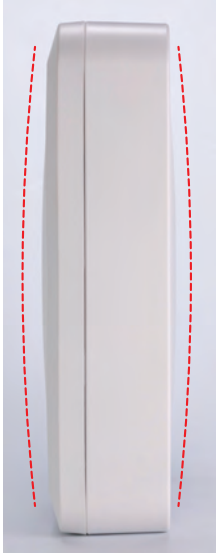

Test Result

2. WP20-28-7G with PMF-12HAS - 2 pcs

Equalized pressure from the usage of a protective vent prevents deformation of the enclosure.

Before

Low Temp. Test

2. First piece

To • Bottom / No deformation

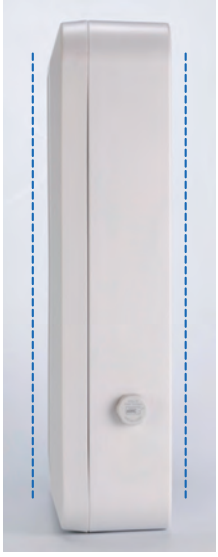

Before

High Temp. Test

2. Second piece

Top • Bottom / No deformation

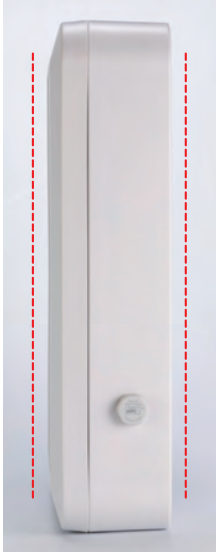

Information on installation of cable glands

■ When affixing on cable glands to areas without sufficient space, the nut may not be able to be properly secured on.
For such instances, a thread-hole should be made for the cable gland to be directly screwed into without utilizing the nut.

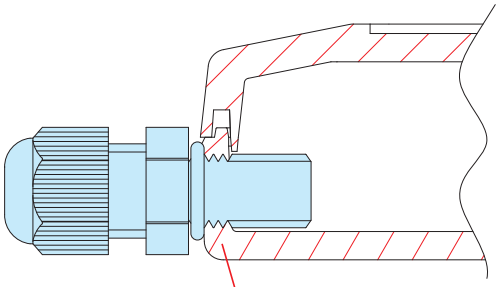

Cross-section

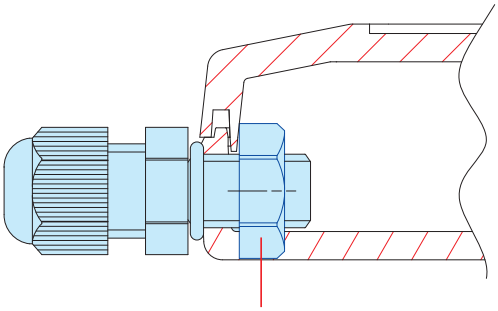

Obstruction

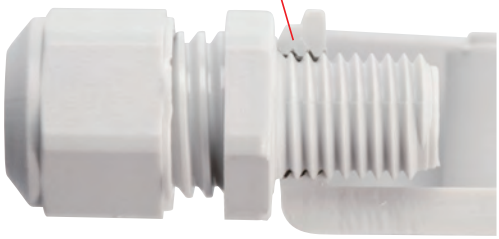

■ Thread-hole sizes from M6~M32, and PG7~PG21 are possible with our customization services

■ Please utilize a cable gland from our available range of cable gland accessories.
Refer to page 333 ~ 340 for more information.

NEW COMPACT PLASTIC CASE for NEXT GENERATION IoT

Stylish and elegant plastic case for use with all your IoT related devices

SIC•SIM series

Sleek & Glossy Finish High Performance Case

Multipurpose & Wall Mount Models Available

Multipurpose Model
SIC series

Wall Mount Model
SIM series

COMPACT PLASTIC CASE for IoT DEVICES

SIC • SIM series are snap-in type compact-sized plastic case without screws.
Despite the small size, ample internal space is achieved by a snap-in assembly construction.
A rounded design yet having flat surfaces enables easy customization such as hole milling or printing.
Ideal for small IoT appliances such as LoRa WAN or Sigfox power-saving communication devices, RFID or GPS gadgets, or network sensors.

Wall Mount Communication Network Device

RFID Reader

Remote Controller

Security Sensor

USB Data Logger

SIC series IoT SMALL PLASTIC CASE

NEW

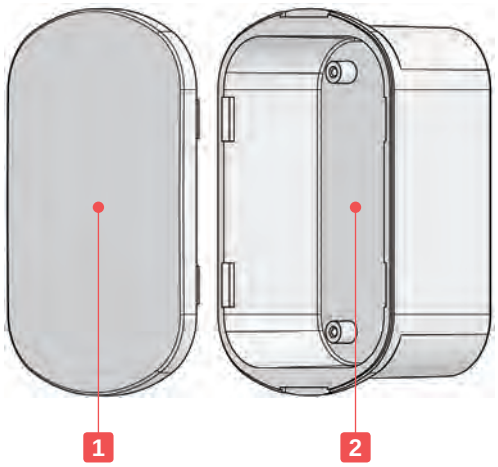

Technical Data
Protection class : IP40 Operating temperature Black (ABS) : -10°C ~ +60°C Off-white (ASA) : -30°C ~ +60°C

*May become brittle and break under impact when temperature is lowered close to -30°C.

- Small rounded design plastic case ideal for use as IoT devices.
- Easy and tool-less assembly snap-in case.
- While being small in size, there is ample internal space by utilization of the snap-in structure.
- The polished surface also provides a high-end finish and gives off a superior quality and feel while having superb cost performance.
- Off-white models are made of weather-resistant ASA material.
  Suitable for devices intending to be used under direct sunlight.

- Optional universal PCB, PCB32-53 is compatible with SIC5-7-2 and 5-7-3 models.
  See PCB series on our website for more details.

Components

No.	Part name	Pcs	Material	Color / Finish
1	Cover	1	ABS UL94HB	Black / Polished
			Weather-resistant ASA UL94HB	Off-white / Polished
2	Base	1	ABS UL94HB	Black / Polished
			Weather-resistant ASA UL94HB	Off-white / Polished

Accessories (Optional parts)

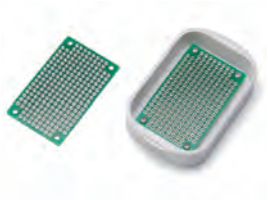

Universal PCB PCB series
See website

PCB mounting screw EM-2
See page 123

Neodymium magnet NMG series
See page 117

SIC dimensions

■ DXF/DWG/PDF/STP drawings available on our website.

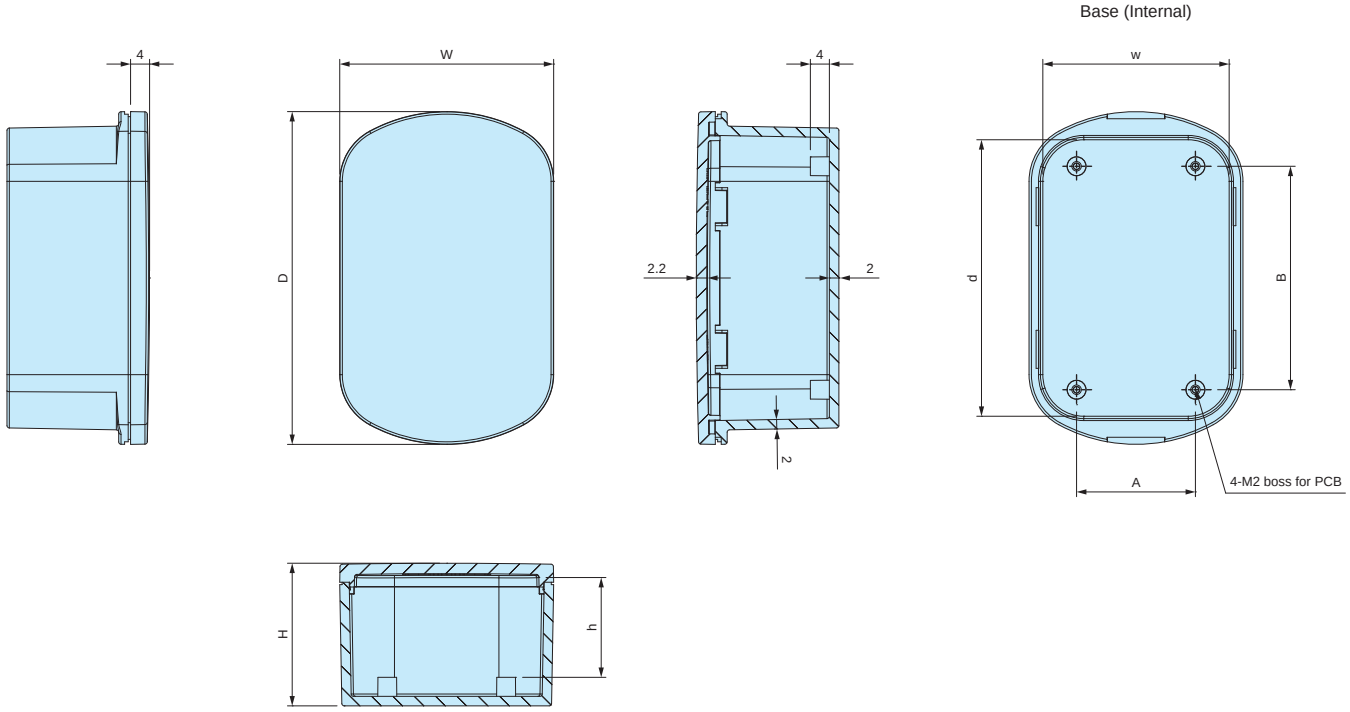

Product no. / Dimensions

Product no.		External dimensions			Internal dimensions			Boss pitch		Weight (g)
● Black	● Off-white	W	D	H	w	d	h	A	B	
SIC5-7-2B	SIC5-7-2W	45	70	20	39.5	58.5	10.9	25	47	20.1
SIC5-7-3B	SIC5-7-3W	45	70	30	39.1	58.1	20.9	25	47	24.1
SIC5-9-2B	SIC5-9-2W	45	90	20	39.5	78.5	10.9	25	67	24.9
SIC5-9-3B	SIC5-9-3W	45	90	30	39.1	78.1	20.9	25	67	29.4

Accessories (Optional parts) COIN CELL BATTERY HOLDERS

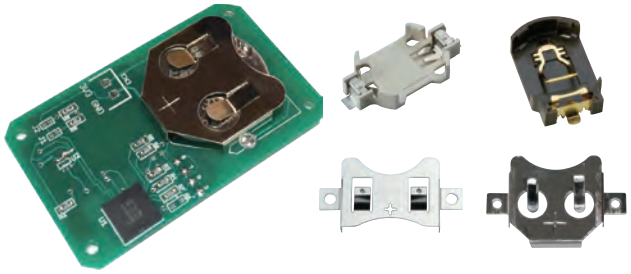

- Various coin cell battery holders can be utilized.
  See coin cell battery holders on our website for more details.
  Refer to the chart for compatible holders.
- Chart on the right is based upon mounting onto a 1.2mm thick PCB.
- Please note that depending on the mounting location, PCB may not be able to be properly affixed on.

COMPATIBLE COIN CELL BATTERY HOLDERS CHART

Product no.	Compatible coin cell battery holders
SIC5-7-2□ SIC5-9-2□	SMTU357 • 1220 (G) • 1225 • 1632 (G) • 2-2016 SMTU2032 (G) • 2430 • 2450 HU357 • 1220 • 1225 • 1632 • 2032 • 2430 • 2450 PB621, PD23, BCR20H4, BCR20H5, CH7410 BK-879, 5091, 5067, 888 SMTM1632, 2032
SIC5-7-3□ SIC5-9-3□	SMTU357 • 1220 (G) • 1225 • 1632 (G) • 2-2016 SMTU2032 (G) • 2430 • 2450 • 2477 HU357 • 1220 • 1225 • 1632 • 2032 • 2430 • 2450 • 2477 PB621, PD23, BCR20H4 • 20H5, BH-50N, CH7410 BK-879, 5091, 5067, 888 SMTM1632 • 2032

SIM series WALL MOUNT IoT SMALL PLASTIC CASE NEW

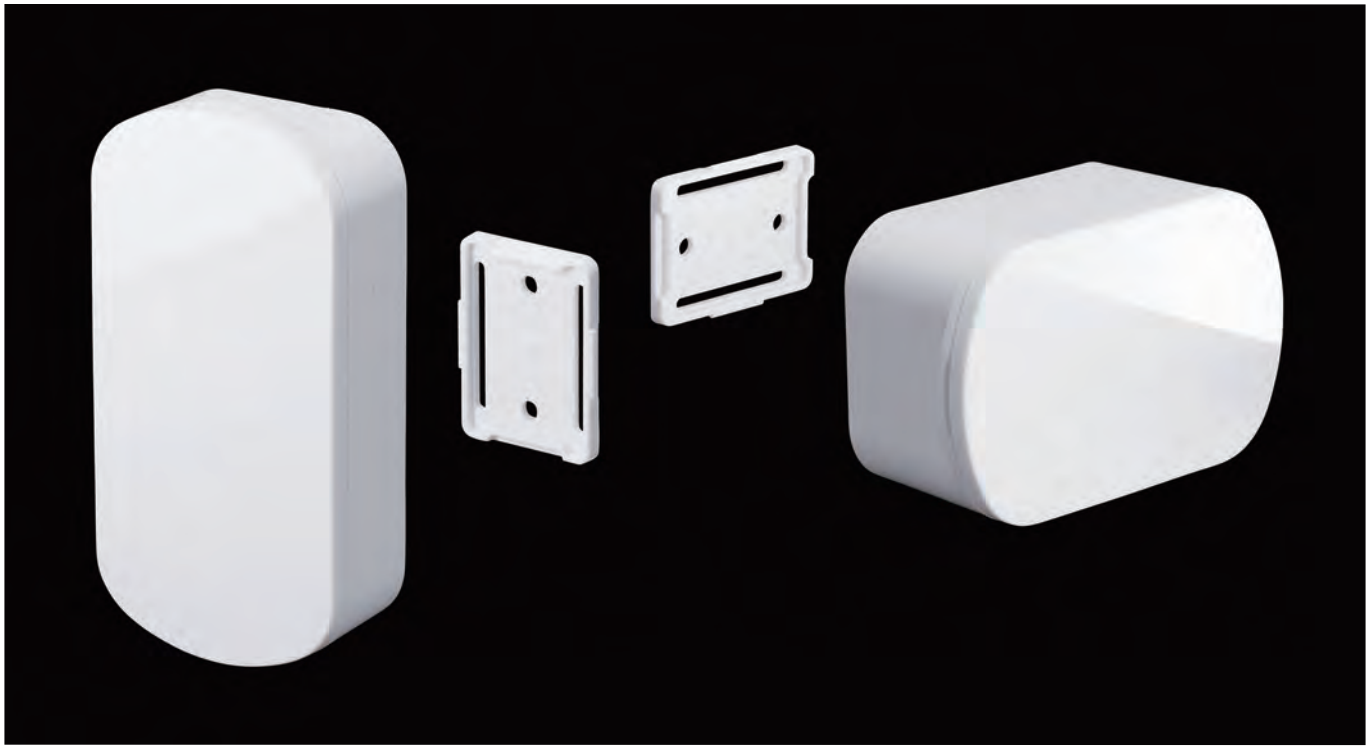

Technical Data
Protection class: IP40 Operating temperature: -30°C ~ +60°C

*May become brittle and break under impact when temperature is lowered close to -30°C.

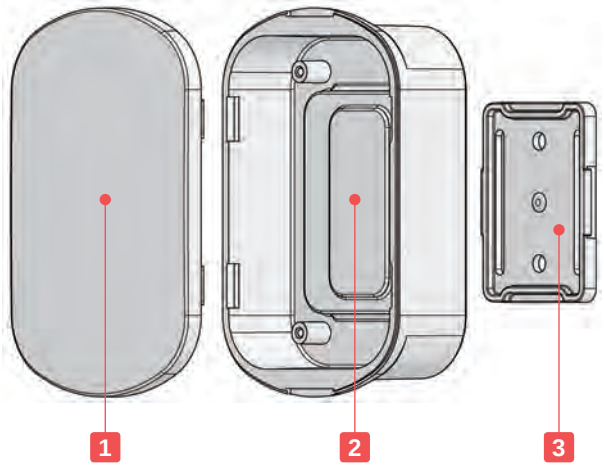

- Small rounded design plastic case ideal for use as IoT devices.
- Easily attached to, or detached from the wall by using the wall mounting bracket.
- Made of weather-resistant ASA material.
  Suitable for devices intending to be used under direct sunlight.
- Optional universal PCB, PCB32-53 is compatible with SIM5-7-2 and 5-7-3 models. See PCB series on our website for more details.

Components

No.	Part name	Pcs	Material	Color / Finish
1	Cover	1	Weather-resistant ASA UL94HB	Off-white / Polished
2	Base	1	Weather-resistant ASA UL94HB	Off-white / Polished
3	Wall mounting bracket	1	Weather-resistant ASA UL94HB	Off-white / Polished

Bracket installation

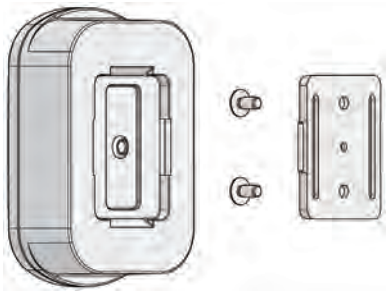

Accessories (Optional parts)

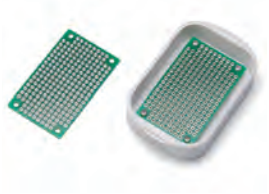

Universal PCB PCB series
See website

PCB mounting screw EM-2
See page 123

SIM dimensions

■ DXF/DWG/PDF/STP drawings available on our website.

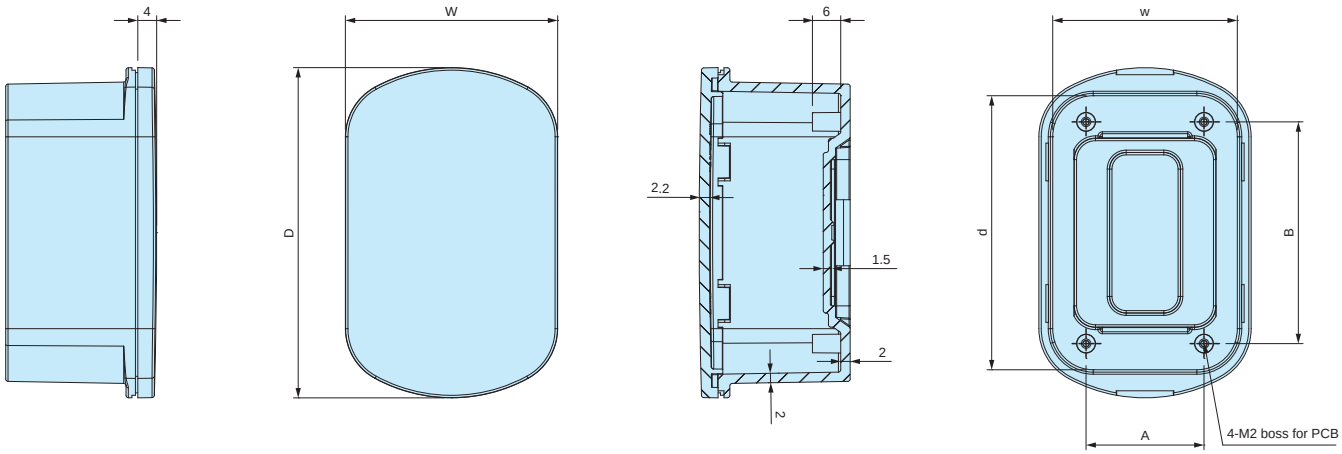

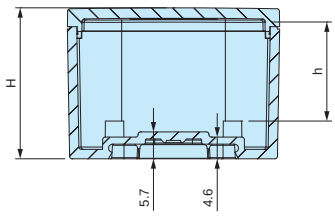

*No changes to external height (H) when affixed onto the wall mounting bracket.

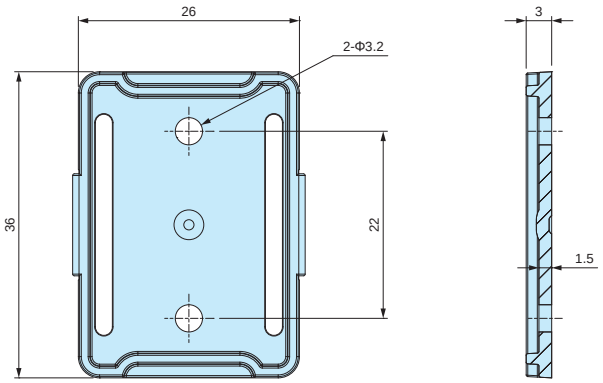

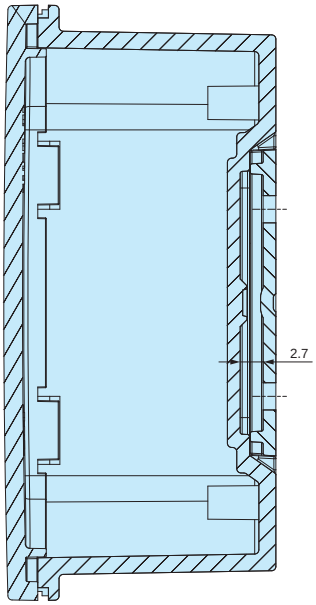

Hole layout for wall mount

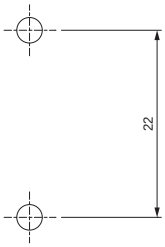

■ M3 screws for installation of bracket on walls are not included.

Product no. / Dimensions

Product no.	External dimensions			Internal dimensions			Boss pitch		Weight (g)
	W	D	H	w	d	h	A	B	
SIM5-7-2W	45	70	22	39.4	58.4	10.9	25	47	22.8
SIM5-7-3W	45	70	32	39.1	58	20.9	25	47	25.9
SIM5-9-2W	45	90	22	39.4	78.4	10.9	25	67	27,7
SIM5-9-3W	45	90	32	39.1	78	20.9	25	67	32.3

SHOCKPROOF PLASTIC ENCLOSURE

Ensure your industrial tablet, measuring equipment and controller is protected with the silicone corner guards.

PFG series

6 DIFFERENT COLOR COMBINATIONS AVAILABLE

3 corner guard colors and 2 plastic box colors available for a total of 6 color combinations to choose from.
Different color combinations can be freely chosen depending on your environment.

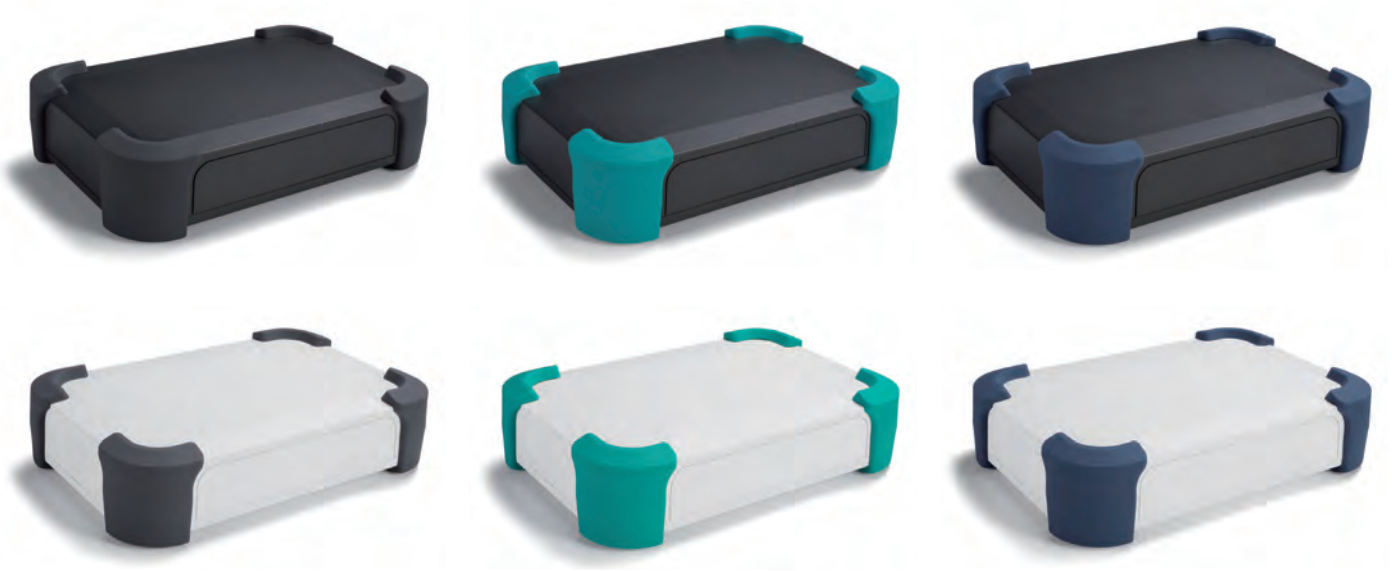

HOW TO ASSEMBLE CORNER GUARD

1. Insert corner guards into designated holes on the top corners.

2. Insert spacers into the holes on the bottom of corner guards. Fasten bottom base and corner guards together with screws.

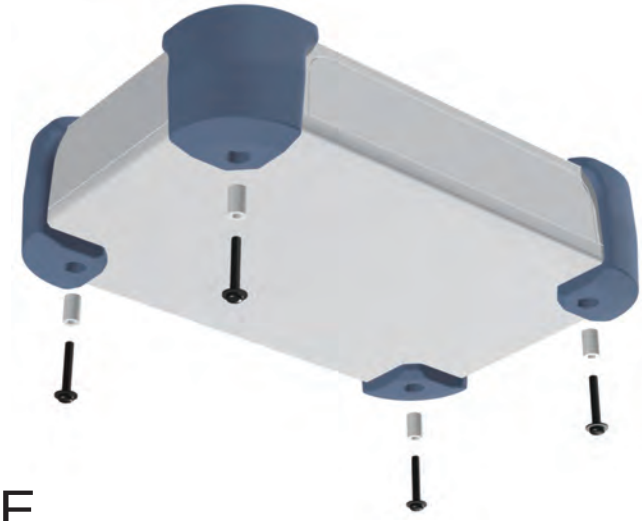

APPLICATION EXAMPLE

Industrial Tablet

Medical Equipment

Network Device

PFG series SHOCKPROOF PLASTIC ENCLOSURE

NEW

Technical Data
Protection class: IP40 Operating temperature: -10°C ~ +60°C

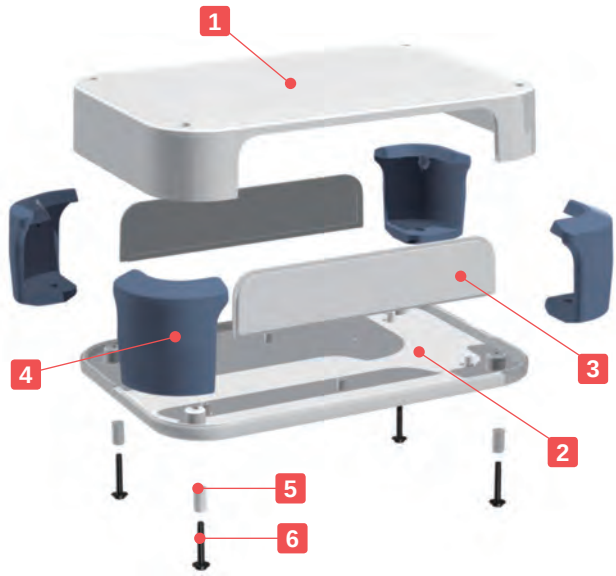

- Network plastic box attached with shockproof silicone corner guards.
- Suitable for industrial tablet, measuring equipment, controller or various other applications.
- A total of 6 color combinations available with 3 corner guard colors - Dark gray, Emerald, Indigo - and 2 plastic box colors - Dark gray and Off-white.

Components

No.	Part name	Pcs	Material	Color / Finish
1	Top cover	1	ABS UL94V-0	Off-white • Dark gray
2	Bottom base	1	ABS UL94V-0	Off-white • Dark gray
3	Panel	2	ABS UL94V-0	Off-white • Dark gray
4	Corner guard	4	Silicone	Dark gray • Emerald • Indigo
5	Spacer	4	PA	White
6	Self-tapping screw	4	Steel	Nickel plated

Color Type

Code	DD Dark gray / Dark gray	DE Dark gray / Emerald	DI Dark gray / Indigo
Color		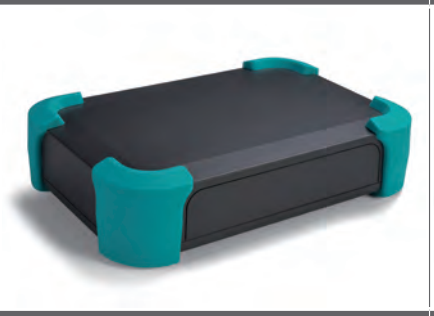	
Code	**WD Off-white / Dark gray**	**WE Off-white / Emerald**	**WI Off-white / Indigo**
Color			

PFG dimensions

■ DXF/DWG/PDF/STP drawings available on our website.

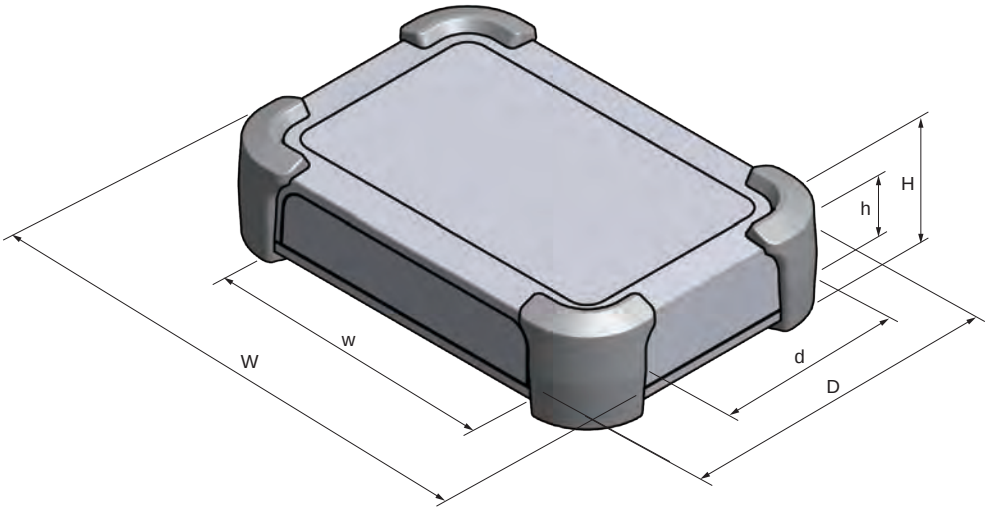

Product no. / Dimensions

■ Please suffix color code at the end of the product number.

Product no.	External dimensions			Internal dimensions			Weight (g)
	W	H	D	w	h	d	
PFG20-4-13 □□	208 (200)	51 (40)	143 (135)	151.6	27.3	124.4	346
PFG20-4-20 □□	208 (200)	51 (40)	208 (200)	151.6	27.3	189.4	450
PFG24-6-17 □□	248 (240)	71.5 (60)	173 (165)	187.6	47	153.2	520
PFG24-6-24 □□	248 (240)	71.5 (60)	248 (240)	187.6	47	228.2	696.5

■ ( ) value = enclosure dimension.

Accessories (Optional parts)

Embedded battery box BC series
See page 125 ~ 128

Tapping standoff TPS series
See page 122

PCB mounting screw EM series
See page 123

Tilt leg TLW series
See page 222

PF series FLAT NETWORK CASE

Huge selection, 41 different sizes are now available.
Suitable for IOT device, data transmitter/receiver, and access point.

From 80 x 50 x 22.5 to 320 x 225 x 100 mm.

NEW SIZE

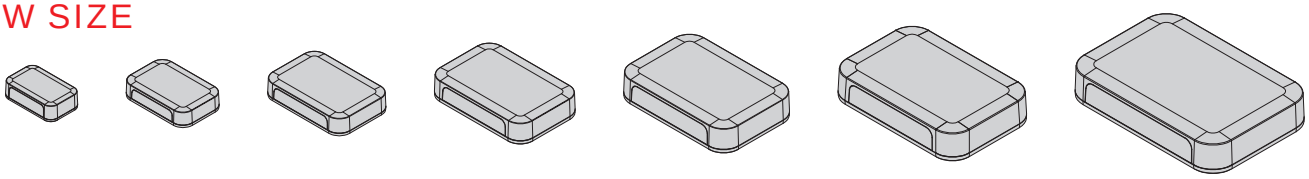

NEW SIZE

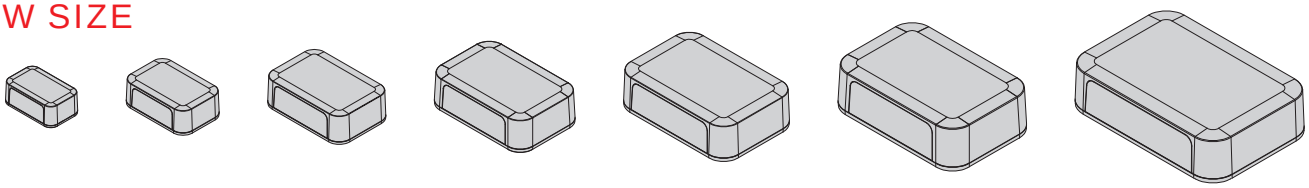

NEW SIZE

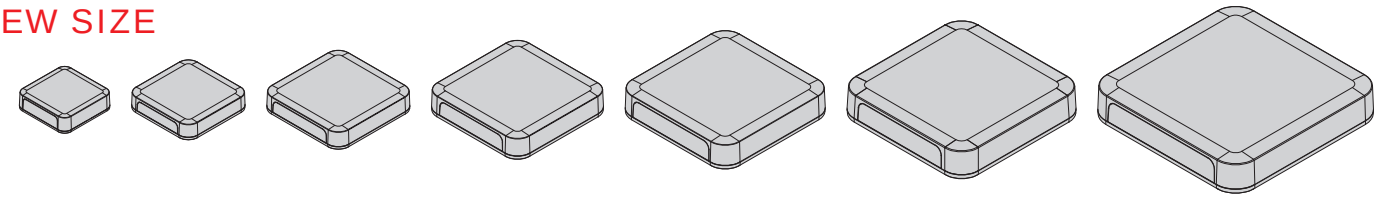

NEW SIZE

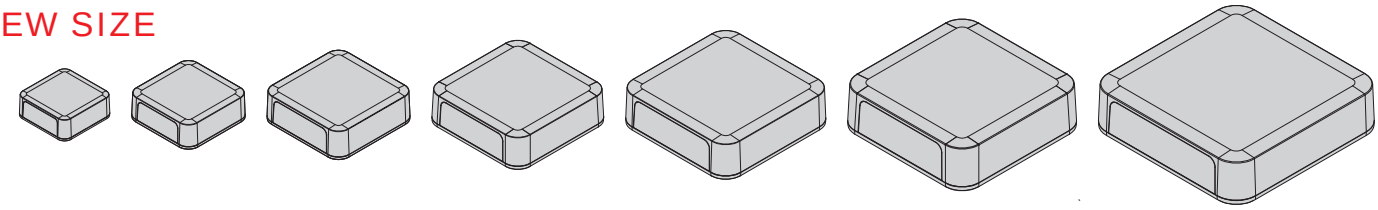

NEW SIZE

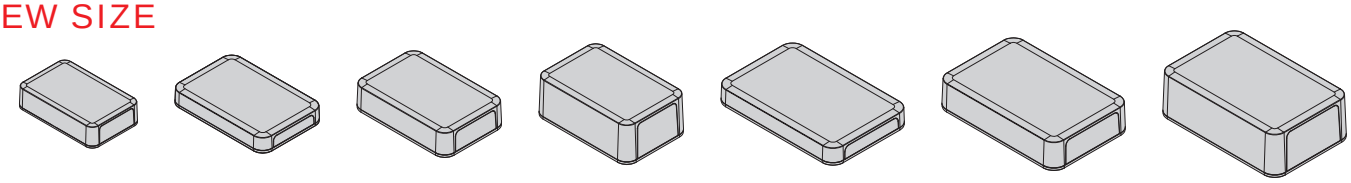

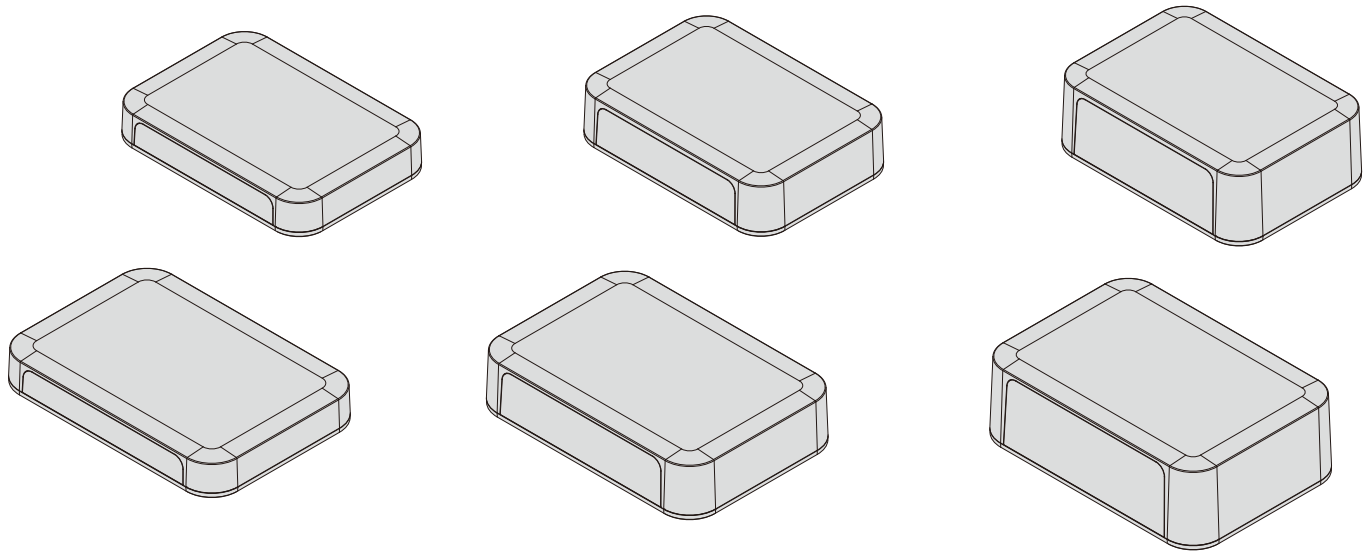

APPLICATION EXAMPLE

WiFi Access Point

Product by VNPT Technology (Vietnam)

USB Power Charging Hub + Data Hub

Product by MT-planning (Japan)

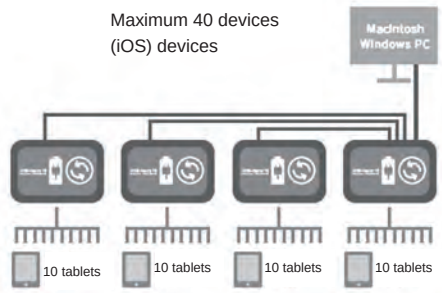

Possible to power charging while transferring data.

Front Door Electric Opener System Controller

Product by LIXIL (Japan)

USB Hemodynamic Research Device

Product by Cardiovascular Engineering (USA)

Multi Channel Data Logger

Product by LUMEL (Poland)

Storage Battery Monitoring System

Product by GS YUASA (Japan)

Wireless CO_2 Monitoring System

Product by Pietiko (Finland)

Wireless Safety Confirmation System

Product by BEPREVENT (Spain)

Wireless Home Electronics Controller

Product by AR SMART (Colombia)

G4 Flight Tracker

Product by Guardian Mobility (Canada)

Advanced Trigger Station

Product by BrainTrends (Italy)

iCONSE-T IoT and Sensor Network Training System

Product by Benchmark Electronic Systems (India)

Wireless Network Data Logger

Product by SensingWinTech (Japan)

Analog Serial Converter

Product by DATATECHNO (Japan)

"SenSu" Communication Unit with Sensor

Product by ITbook Technology (Japan)

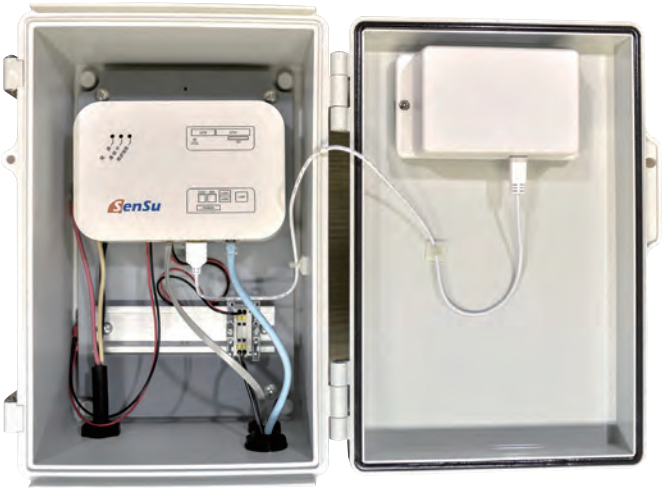

Modbus Converter

Product by DATATECHNO (Japan)

PF series NETWORK PLASTIC BOX

NEW SIZE

Technical Data
Protection class: IP40 Operating temperature: -10°C ~ +60°C

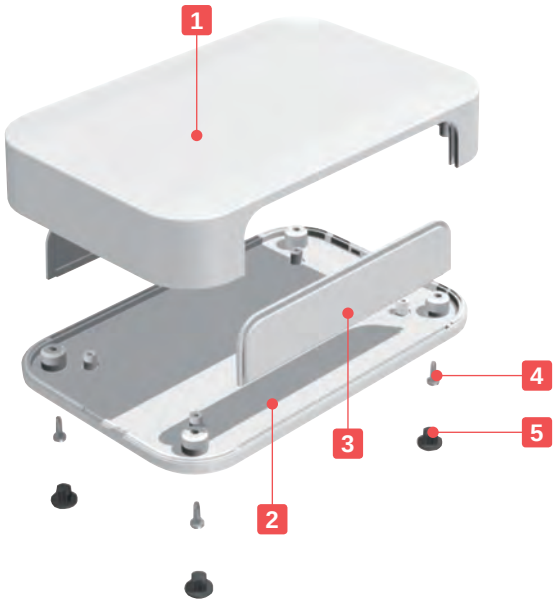

- 5 new sizes added for a total of 41 different sizes available for selection.
- Flat designed plastic case with detachable panels.
- Made of flame-resistant ABS UL94V-0 and available in Off-white and Dark gray colors.
- Equipped with built-in bosses for PCB mounting.
- Suitable for Wi-Fi access point, measuring equipment, controller or various other applications.

Components

No.	Part name	Pcs	Material	Color / Finish
1	Top cover	1	ABS UL94V-0	Off-white • Dark gray
2	Bottom base	1	ABS UL94V-0	Off-white • Dark gray
3	Panel	2	ABS UL94V-0	Off-white • Dark gray
4	Self-tapping screw	4	Steel	Nickel plated
5	Rubber feet※	4	Elastomer UL94HB	Dark gray

※Rubber feet are not included in PF8-□-5, PF8-□-8, PF8-3-13 models.

Accessories (Optional parts)

Embedded battery box BC series
See page 125 ~ 128

Tapping standoff TPS series
See page 122

PCB mounting screw EM series
See page 123

Suspension bracket WM series
See page 116

PF dimensions

■ DXF/DWG/PDF/STP drawings available on our website.

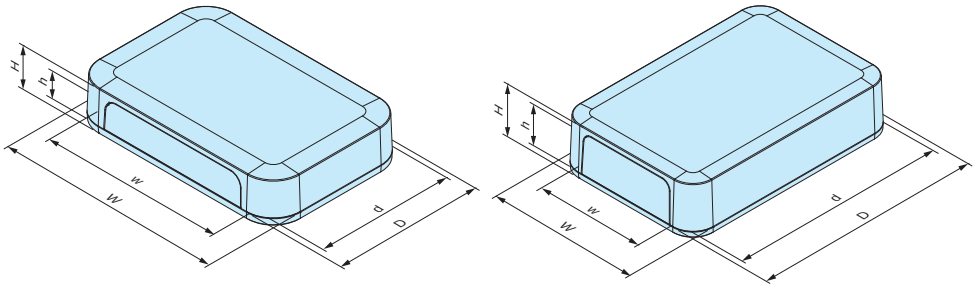

Product no. / Dimensions

Product no.		External dimensions			Internal dimensions			Weight (g)
● Off-white	● Dark gray	W	H	D	w	h	d	
NEW PF 8- 2- 5W	NEW PF 8- 2- 5D	80	22.5	50	55.5	13.5	42.8	36.2
NEW PF 8- 2- 8W	NEW PF 8- 2- 8D	80	22.5	80	55.5	13.5	72.8	53.3
NEW PF 8- 3- 5W	NEW PF 8- 3- 5D	80	30	50	55.5	21	42.3	41.6
NEW PF 8- 3- 8W	NEW PF 8- 3- 8D	80	30	80	55.5	21	72.3	60.1
NEW PF 8- 3-13W	NEW PF 8- 3-13D	80	30	125	55.5	21	117.3	87.3
PF10- 2- 7W	PF10- 2- 7D	100	22.5	67	67.4	11.1	58.4	60
PF10- 2-10W	PF10- 2-10D	100	22.5	100	67.4	11.1	91.4	82.9
PF10- 2-15W	PF10- 2-15D	100	22.5	150	67.4	11.1	141.4	120.2
PF10- 4- 7W	PF10- 4- 7D	100	35	67	67.4	23.6	57.5	65
PF10- 4-10W	PF10- 4-10D	100	35	100	67.4	23.6	90.5	97.1
PF10- 4-15W	PF10- 4-15D	100	35	150	67.4	23.6	140.5	132.6
PF10- 6-15W	PF10- 6-15D	100	55	150	67.4	43.6	139.1	169.1
PF13- 3- 9W	PF13- 3- 9D	125	25	85	92.4	13.5	76.2	90.8
PF13- 3-13W	PF13- 3-13D	125	25	125	92.4	13.5	116.2	127.5
PF13- 3-19W	PF13- 3-19D	125	25	190	92.4	13.5	181.2	186.8
PF13- 4- 9W	PF13- 4- 9D	125	40	85	92.4	28.5	75.2	108.4
PF13- 4-13W	PF13- 4-13D	125	40	125	92.4	28.5	115.2	151.4
PF13- 4-19W	PF13- 4-19D	125	40	190	92.4	28.5	180.2	214.9
PF13- 6-19W	PF13- 6-19D	125	60	190	92.4	48.5	178.8	250.4
PF15- 3-10W	PF15- 3-10D	150	30	100	112.4	17.8	90	145.5
PF15- 3-15W	PF15- 3-15D	150	30	150	112.4	17.8	140	207.5
PF15- 5-10W	PF15- 5-10D	150	45	100	112.4	32.8	88.9	166
PF15- 5-15W	PF15- 5-15D	150	45	150	112.4	32.8	138.9	233.5
PF18- 4-12W	PF18- 4-12D	175	35	120	132.4	22.4	110.3	188.7
PF18- 4-18W	PF18- 4-18D	175	35	175	132.4	22.4	165.3	266.8
PF18- 5-12W	PF18- 5-12D	175	50	120	132.4	37.4	109.3	213.6
PF18- 5-18W	PF18- 5-18D	175	50	175	132.4	37.4	164.3	302.1
PF20- 4-13W	PF20- 4-13D	200	40	135	151.6	27.3	124.4	264
PF20- 4-20W	PF20- 4-20D	200	40	200	151.6	27.3	189.4	368.5
PF20- 6-13W	PF20- 6-13D	200	60	135	151.6	47.3	123	302.5
PF20- 6-20W	PF20- 6-20D	200	60	200	151.6	47.3	188	417
PF24- 4-17W	PF24- 4-17D	240	42.5	165	187.6	29.5	154.5	370.4
PF24- 4-24W	PF24- 4-24D	240	42.5	240	187.6	29.5	229.5	521.4
PF24- 6-17W	PF24- 6-17D	240	60	165	187.6	47	153.2	408.8
PF24- 6-24W	PF24- 6-24D	240	60	240	187.6	47	228.2	568.7
PF28- 5-20W	PF28- 5-20D	280	45	200	223.6	31.4	189.3	564.1
PF28- 7-20W	PF28- 7-20D	280	65	200	223.6	51.4	187.9	618.4
PF28- 9-20W	PF28- 9-20D	280	90	200	223.6	76.4	186.2	709.2
PF32- 5-23W	PF32- 5-23D	320	45	225	259.6	31.3	214.3	697.1
PF32- 7-23W	PF32- 7-23D	320	70	225	259.6	56.3	212.6	782.1
PF32-10-23W	PF32-10-23D	320	100	225	259.6	86.3	210.5	899.8

* H dimension does not include the height of rubber feet.(Rubber feet height = +2mm)

PFE series EMC SHIELDED PLASTIC BOX

EMC Shielding Effects

- PFE series is an EMC shielded version of the PF series network plastic box coated internally with DOTITE conductive paint (acrylic paint mixed with nickel filler).
- Flat designed plastic case with detachable panels.
- Made of flame-resistant ABS UL94V-0.
- Equipped with built-in bosses for PCB mounting.
- Suitable for Wi-Fi access point, measuring equipment, controller or various other applications for desktop, wall mounting use and so on.

Technical Data
Protection class: IP40 Operating temperature: -10°C ~ +60°C

Components

No.	Part name	Pcs	Material	Color / Finish	Conductive paint
1	Top cover	1	ABS UL94V-0	Off-white	DOTITE
2	Bottom base	1	ABS UL94V-0	Off-white	DOTITE
3	Panel	2	ABS UL94V-0	Off-white	DOTITE
4	Self-tapping screw	4	Steel	Nickel plated	–
5	Rubber feet	4	Elastomer	Dark gray	–

Accessories (Optional parts)

Tapping standoff TPS series
See page 122

PCB mounting screw EM series
See page 123

TORX screw MR series
See page 123

Suspension bracket WM series
See page 116

Embedded battery box BC series
See page 125 ~ 128

PFE dimensions

■ DXF/DWG/PDF/STP drawings available on our website.

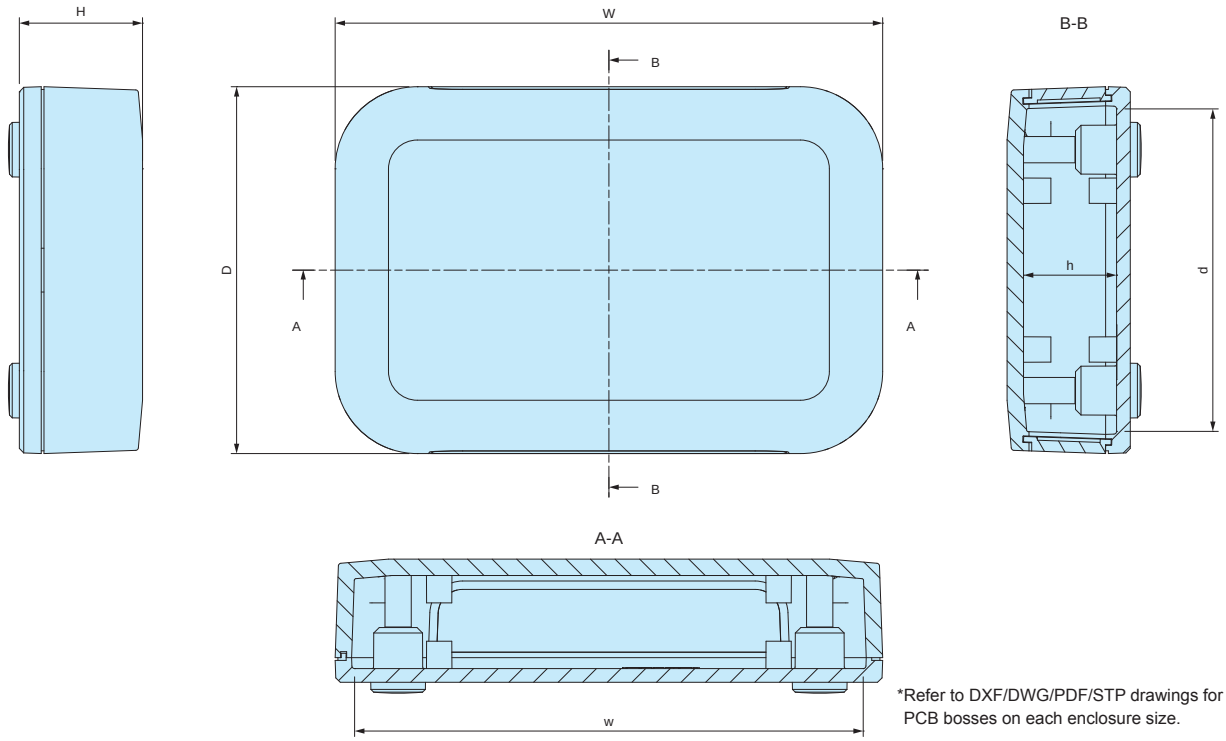

*Refer to DXF/DWG/PDF/STP drawings for number of PCB bosses on each enclosure size.

Product no. / Dimensions

*H dimension does not include the height of rubber feet. (Rubber feet height = +2mm)

Product no.	External dimensions			Internal dimensions			Screw	Weight (g)
	W	H	D	w	h	d		
PFE13-4- 9W	125	40	85	116	75	34.5	M2.5-8 x 4 pcs	114
PFE15-3-10W	150	30	100	142	90	24	M2.5-8 x 4 pcs	152
PFE15-5-15W	150	45	150	141	139	39	M2.5-8 x 4 pcs	244.5
PFE20-4-13W	200	40	135	191.5	124.5	34	M3-8 x 4 pcs	274.5

Accessories (Optional parts)

PFRF series RUBBER FEET for PF • PFE

- Rubber feet for PF • PFE series.
- Inserted into the screw holes on the underside of box.
- Elastomer material is resistant against color migration.
- PF • PFE boxes comes with PFRF rubber feet. Utilize PFRF as spare or replacement.

PFRF dimensions

■ STP drawings available on our website.

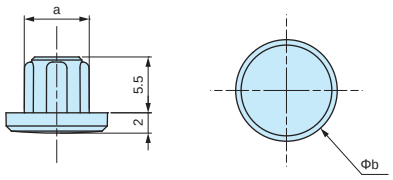

Product no. / Dimensions

Product no.	Dimensions		Suitable models	Material	Color	Pack of
	a	b				
PFRF-M2.5D	6.4	10	PF10-2-7,10-2-10,10-2-15,10-4-7,10-4-10,10-4-15 PF10-6-15,13-3-9,13-3-13,13-3-19,13-4-9,13-4-13 PF13-4-19,13-6-19,15-3-10,15-3-15,15-5-10,15-5-15 PF18-4-12,18-4-18,18-5-12,18-5-18 PFE13-4-9,15-3-10,15-5-15	Elastomer	Dark gray	4
PFRF-M3D	7.2	11	PF20-4-13,20-4-20,20-6-13,20-6-20,24-4-17 PF24-4-24,24-6-17,24-6-24,28-5-20,28-7-20 PF28-9-20,32-5-23,32-7-23,32-10-23 PFE20-4-13	Elastomer	Dark gray	4

PFF series FLANGED NETWORK PLASTIC BOX

Technical Data
Protection class: IP40 Operating temperature: -10°C ~ +60°C

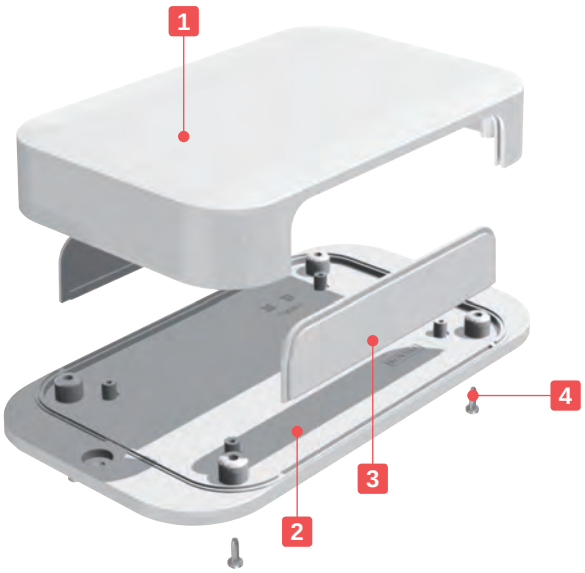

- PF plastic case with wall mounting flange bottom design.
- Made of flame-resistant ABS UL94V-0 and available in Off-white color.
- Flat designed plastic case with detachable panels.
- Total of 30 different sizes available for selection.
- Suitable for wireless LAN, Wi-Fi access point, HUB, controller or other applications.

Components

No.	Part name	Pcs	Material	Color / Finish
1	Top cover	1	ABS UL94V-0	Off-white
2	Flanged base	1	ABS UL94V-0	Off-white
3	Panel	2	ABS UL94V-0	Off-white
4	Self-tapping screw	4	Steel	Nickel plated

Accessories (Optional parts)

Tapping standoff TPS series
See page 122

PCB mounting screw EM series
See page 123

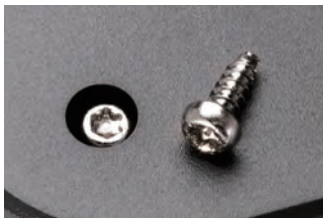

TORX screw MR series
See page 123

Adhesive standoff AST series
See page 121

PFF dimensions

■ DXF/DWG/PDF/STP drawings available on our website.

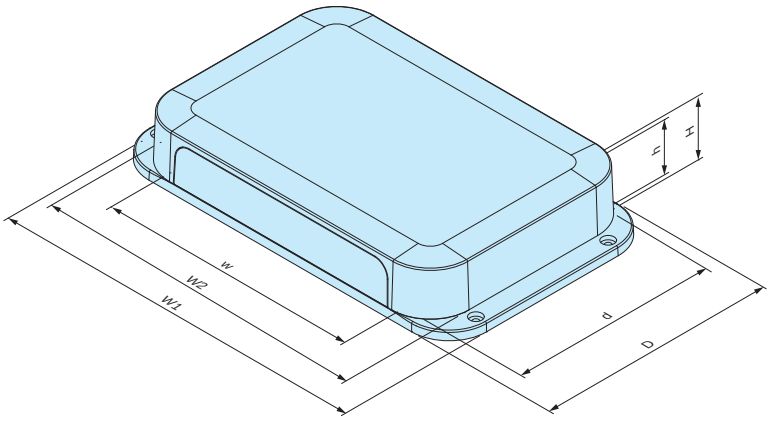

Product no. / Dimensions

Product no.	External dimensions				Internal dimensions			Weight (g)
	W1	W2	H	D	w	h	d	
PFF10- 2- 7W	124.3	100	22.5	67.3	67.4	11.1	58.4	60.8
PFF10- 2-10W	124.3	100	22.5	100.3	67.4	11.1	91.4	84.6
PFF10- 4- 7W	124.3	100	35	67.3	67.4	23.6	57.5	72
PFF10- 4-10W	124.3	100	35	100.3	67.4	23.6	90.5	99.1
PFF13- 3- 9W	149.3	125	25	85.3	92.4	13.5	76.2	90.8
PFF13- 3-13W	155.3	125	25	125.3	92.4	13.5	116.2	128.6
PFF13- 4- 9W	149.3	125	40	85.3	92.4	28.5	75.2	108.4
PFF13- 4-13W	155.3	125	40	125.3	92.4	28.5	115.2	152.3
PFF15- 3-10W	180.4	150	30	100.4	112.4	17.8	90	145.2
PFF15- 3-15W	180.4	150	30	150.4	112.4	17.8	140	211.3
PFF15- 5-10W	180.4	150	45	100.4	112.4	32.8	88.9	168.6
PFF15- 5-15W	180.4	150	45	150.4	112.4	32.8	138.9	235
PFF18- 4-12W	205.4	175	35	120.4	132.4	22.4	110.3	192.1
PFF18- 4-18W	205.4	175	35	175.4	132.4	22.4	165.3	209.8
PFF18- 5-12W	205.4	175	50	120.4	132.4	37.4	109.3	215.8
PFF18- 5-18W	205.4	175	50	175.4	132.4	37.4	164.3	299.7
PFF20- 4-13W	230.5	200	40	135.5	151.6	27.3	124.4	267.7
PFF20- 4-20W	230.5	200	40	200.5	151.6	27.3	189.4	376
PFF20- 6-13W	230.5	200	60	135.5	151.6	47.3	123	309.7
PFF20- 6-20W	230.5	200	60	200.5	151.6	47.3	188	422.9
PFF24- 4-17W	270.5	240	42.5	165.5	187.6	29.5	154.5	366.9
PFF24- 4-24W	270.5	240	42.5	240.5	187.6	29.5	229.5	513.5
PFF24- 6-17W	270.5	240	60	165.5	187.6	47	153.2	403.8
PFF24- 6-24W	270.5	240	60	240.5	187.6	47	228.2	560.8
PFF28- 5-20W	310.5	280	45	200.5	223.2	31.4	189.3	547.5
PFF28- 7-20W	310.5	280	65	200.5	223.2	51.4	187.9	606.6
PFF28- 9-20W	310.5	280	90	200.5	223.2	76.4	186.2	694.1
PFF32- 5-23W	350.5	320	45	225.5	259.2	31.3	214.3	679.9
PFF32- 7-23W	350.5	320	70	225.5	259.2	56.3	212.6	767.4
PFF32-10-23W	350.5	320	100	225.5	259.2	86.3	210.5	887.4

TWF series
FLANGED PLASTIC ENCLOSURE

Multi-purpose flanged enclosure designed for use as a wall-mounted device/terminal.
23 different sizes in 2 colors available.
Recommended to be used as measurement instruments, wireless communication gadgets, controller devices and so on.

APPLICATION EXAMPLE

Solar Power System Remote Controller

Product by Wave Energy (Japan)

Solar Panel Charge Controller

Product by SunWorks (UK)

Wireless RFID Tag Search Device

RFID Tag

Utilization of TAKACHI PS-65W portable plastic case.

Product by MULTILUX (Slovenia)

CO_2 Sensor

Temperature • Humidity Sensor

Product by HANERON (Japan)

Remote Power Control Unit

Product by M.C.S (Japan)

Communication Converter

Roof Sprinkler Controller

Product by ES-Waternet (Japan)

LED Lighting RGB Controller

Product by TRi TERASU (Japan)

Private LoRA Gateway

Product by Bunnyhop (Japan)

Contact Relay Output Converter

Product by DAISEN Electronics Industrial (Japan)

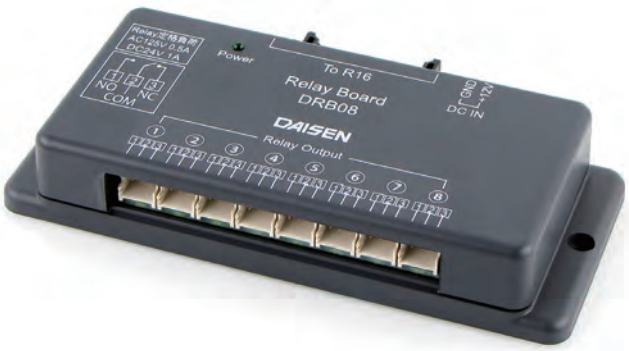

TWF series FLANGED PLASTIC ENCLOSURE

Technical Data
Protection class: IP40 Operating temperature: -10°C ~ +60°C

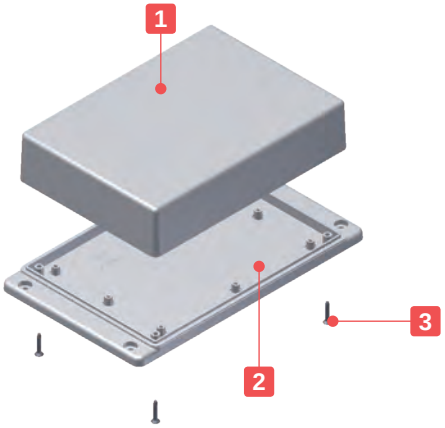

- Multi-purpose flanged enclosure designed for use as a wall-mounted device/ terminal.
- 23 different sizes in 2 colors. Made of ABS UL94V-0.
- Equipped with screwing bosses for PCB.
- Recommended to be used as measurement instruments, wireless communication gadgets, controller devices and so on.

Components

No.	Part name	Pcs	Material	Color / Finish
1	Cover	1	ABS UL94V-0	Off-white • Dark gray
2	Flanged base	1	ABS UL94V-0	Off-white • Dark gray
3	Self-tapping screw	2 / 4	Steel	Nickel plated • Black trivalent chromate

Accessories (Optional parts)

Tapping standoff TPS series
See page 122

PCB mounting screw EM-2.3
See page 123

TORX screw MR series
See page 123

TWF dimensions

■ DXF/DWG/PDF/STP drawings available on our website.

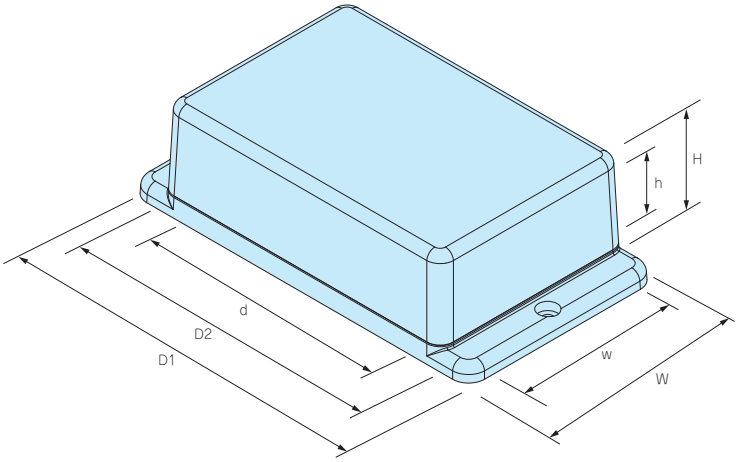

Color Type

Code	Cover	Flanged base	Screw
W	Off-white	Off-white	Nickel plated
D	Dark gray	Dark gray	Black trivalent chromate

Product no. / Dimensions

Product no.		External dimensions				Internal dimensions			Screw	Weight (g)
● Off-white	● Dark gray	W	H	D1	D2	w	h	d		
TWF 4-2- 5W	TWF 4-2- 5D	35.4	22	70.4	50	27.2	13.2	32.4	M2.6-12 x 2 pcs	19.7
TWF 5-2- 5W	TWF 5-2- 5D	50.4	17	70.4	50	42.7	8	31.9	M2.6-12 x 4 pcs	21.5
TWF 5-2- 7W	TWF 5-2- 7D	50.4	17	90.4	70	43.1	8	52.9	M2.6-12 x 4 pcs	29
TWF 5-3- 5W	TWF 5-3- 5D	50.4	27	70.4	50	42.7	18	31.9	M2.6-12 x 4 pcs	26.5
TWF 5-3- 7W	TWF 5-3- 7D	50.4	29.5	90.4	70	43.1	20.5	52.9	M2.6-12 x 4 pcs	36
TWF 5-3- 9W	TWF 5-3- 9D	45.6	27.5	111	90	37.2	17.5	70.4	M2.6-12 x 4 pcs	43
TWF 5-4- 7W	TWF 5-4- 7D	50.4	42	90.4	70	42.5	33	52.9	M2.6-12 x 4 pcs	43.5
TWF 7-2-11W	TWF 7-2-11D	70.6	20.5	127	105	61.4	10.5	83	M2.6-12 x 4 pcs	66.5
TWF 7-3-13W	TWF 7-3-13D	65.5	25.5	150	130	57.7	14.2	105	M3 -16 x 4 pcs	87
TWF 7-4-11W	TWF 7-4-11D	70.6	35.5	127	105	61.4	25.5	83	M2.6-12 x 4 pcs	82
TWF 7-5-11W	TWF 7-5-11D	70.6	50.5	127	105	61.1	40.5	83	M2.6-12 x 4 pcs	96.5
TWF 7-5-13W	TWF 7-5-13D	65.5	50	150	130	55.9	38.7	105	M3 -16 x 4 pcs	114
TWF 8-2- 8W	TWF 8-2- 8D	80.6	23.5	100.6	80	71.5	13.5	59	M2.6-12 x 4 pcs	62
TWF 8-4- 8W	TWF 8-4- 8D	80.6	43.5	100.6	80	71.5	33.5	59	M2.6-12 x 4 pcs	82
TWF 9-4-17W	TWF 9-4-17D	86	35	190	170	76.5	23.7	143	M3 -16 x 4 pcs	150
TWF 9-6-17W	TWF 9-6-17D	86	60	190	170	75.7	48.7	143	M3 -16 x 4 pcs	184
TWF11-5-22W	TWF11-5-22D	110.3	45	250.6	220	100.8	33.7	191	M3 -16 x 4 pcs	250
TWF11-8-22W	TWF11-8-22D	110.3	75	250.6	220	99.3	63.7	191	M3 -16 x 4 pcs	303
TWF13-3-13W	TWF13-3-13D	125.6	25	155.6	125	114.5	13.7	100	M3 -16 x 4 pcs	155
TWF13-3-18W	TWF13-3-18D	125.6	25	205.6	175	114.5	13.7	148	M3 -16 x 4 pcs	199
TWF13-5-13W	TWF13-5-13D	125.6	45	155.6	125	114.5	33.7	100	M3 -16 x 4 pcs	189
TWF13-5-18W	TWF13-5-18D	125.6	45	205.6	175	114.5	33.7	148	M3 -16 x 4 pcs	242
TWF13-7-18W	TWF13-7-18D	125.6	65	205.6	175	114.2	53.7	148	M3 -16 x 4 pcs	281

BUILT-IN BATTERY COMPARTMENT MODEL CHART

Series / Battery Compartment	WC series Page 51 ~ 54	CS series Page 87 ~ 88	CSS series Page 85 ~ 86
	IP67		
CR2032 x 1	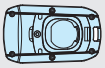 WC72-15(43×15.5×72) WC72-21(43×21.5×72) WC90-15(44.2×15.7×90)	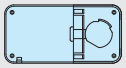 CS75 (35×12×75) CS90 (45×12×90)	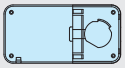 CSS75 (38.6×15.5×78.6) CSS90 (48.6×15.5×93.6)
CR2032 x 2		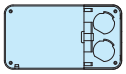 CS115 (63×12×115)	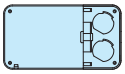 CSS115 (67.1×16×119.1)
CR2450 / CR2477 ×1		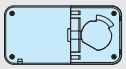 CS100 (50×16.8×100)	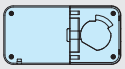 CSS100 (54.1×20.8×104.1)
AAA x 2	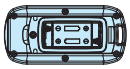 WC105-28-F2(50.5×28.2×105)		
AAA x 3			
AAA x 4			
AAA x 6			
AA x 2			
AA x 3			
AA x 4			
AA x 6			
9V x 1			

■ Enclosure shape, model number, and dimensions (W x H x D) are listed.

WH series Page 57 ~ 62	LC series Page 75 ~ 76	LCS series Page 71 ~ 74	LCT series Page 67 ~ 70
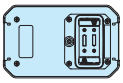 WH125-20-F2 (79×20×126) WH125-28-F2 (79×28×126)	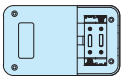 LC115-F2 (69×19.5×115) LC115H-F2(69×28×115)	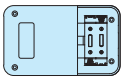 LCS115-F2 (74×24×120) LCS115H-F2 (74×32.5×120)	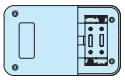 LCT115-F2 (76×28×121.9) LCT115H-F2 (76×36.5×121.9)
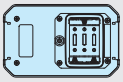 WH125-20-F3 (79×20×126) WH125-28-F3 (79×28×126)	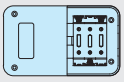 LC115-F3 (69×19.5×115) LC115H-F3 (69×28×115)	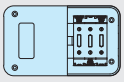 LCS115-F3 (74×24×120) LCS115H-F3 (74×32.5×120)	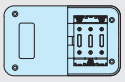 LCT115-F3 (76×28×121.9) LCT115H-F3 (76×36.5×121.9))
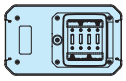 WH145-20-F4 (88×20×146)	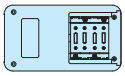 LC135-F4 (76×27×135) LC135H-F4 (76×35×135)	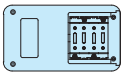 LCS135-F4 (81×32×141) LCS135H-F4 (81×40×141)	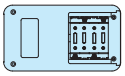 LCT135-F4 (85×40×143.9) LCT135H-F4 (85×48×143.9)
	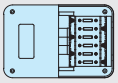 LC145S-F6 (96×20×145) LC145-F6 (96×27×145) LC145H-F6(96×35×145)	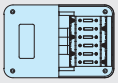 LCS145-F6 (101×32×151) LCS145H-F6(101×40×151)	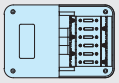 LCT145-F6 (105×40×153.9) LCT145H-F6(105×48×153.9)
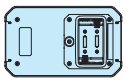 WH145-25-M2 (88×25×146) WH145-33-M2 (88×33×146)	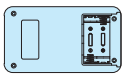 LC115H-M2 (69×28×115) LC135-M2 (76×27×135) LC135H-M2 (76×35×135) LC145-M2 (96×27×145) LC145H-M2 (96×35×145)	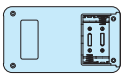 LCS115H-M2 (74×32.5×120) LCS135-M2 (81×32×141) LCS135H-M2 (81×40×141) LCS145-M2 (101×32×151) LCS145H-M2 (101×40×151)	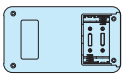 LCT115H-M2 (76×36.5×121.9) LCT135-M2 (85×40×143.9) LCT135H-M2 (85×48×143.9) LCT145-M2 (105×40×153.9) LCT145H-M2 (105×48×153.9)
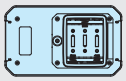 WH145-25-M3 (88×25×146) WH145-33-M3 (88×33×146)	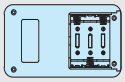 LC135-M3 (76×27×135) LC135H-M3 (76×35×135)	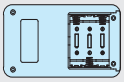 LCS135-M3 (81×32×141) LCS135H-M3 (81×40×141)	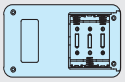 LCT135-M3(85×40×143.9) LCT135H-M3(85×48×143.9)
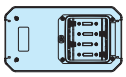 WH170-25-M4 (95×25×171) WH170-33-M4 (95×33×171)	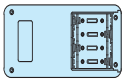 LC145-M4 (96×27×145) LC145H-M4 (96×35×145) LC165-M4 (80×27×165) LC165H-M4 (80×35×165)	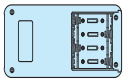 LCS145-M4(101×32×151) LCS145H-M4(101×40×151) LCS165-M4 (85×32×171) LCS165H-M4 (85×40×171)	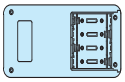 LCT145-M4(105×40×153.9) LCT145H-M4(105×48×153.9) LCT165-M4 (89×40×173.9) LCT165H-M4 (89×48×173.9)
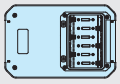 WH190-25-M6 (126×25×191) WH190-33-M6 (126×33×191)			
	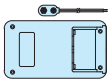 LC115H-9V (69×28×115) LC135-9V (76×27×135) LC135H-9V (76×35×135)	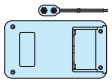 LCS115H-9V (74×32.5×120) LCS135-9V (81×32×141) LCS135H-9V (81×40×141)	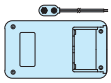 LCT115H-9V (76×36.5×121.9) LCT135-9V (85×40×143.9) LCT135H-9V (85×48×143.9)

*Dimensions shown for CSS, LCT and LCS series are with silicone cover attached.

IP67 PORTABLE CASE

WC series

IP67

IP67 is

●IEC60529 standard is a system for classifying the degrees of protection provided by the enclosures of electrical equipment, such as against dust and water.

IP6x : No ingress of dust; complete protection against contact (dust tight)
IPx7 : No ingress of water when submerged up to a depth of 1 m for 30 min

High waterproof performance with both TPE and silicone gasket

ABS and TPE double-shot molded top & bottom covers allows for a good waterproof seal.
The durable silicone gasket maintains the battery lid seal.
Insert nut and screw allow the battery compartment to remain durable even after repeated opening/closing.

Great protection by TPE sides

Side grips in TPE material provides a comfort -able grip and protection against drop impact.

Available in 3 different color combinations

APPLICATION EXAMPLE

Best for outdoor use as a remote control, RFID tag, compact GPS, wireless device, simplified measurement gadget and so on.

Multi-function Infrared Remote Controller

Product by SIMEX (Poland)

Emergency Call Receiver / Transmitter

Product by Knop Elektronik (Denmark)

Long Range Keyfob Remote Controller

Product by Elsema (Australia)

Structure AI Inspection Noise Detector System

Product by AIST (Japan)

Custom embossed or standard overlay sheets with low initial costs are available

Waterproof performance may be lost by drilling/milling holes or cut-outs for buttons or switches on waterproof enclosures.
Use an IP rated overlay sheet, or membrane keypad in order to allow the milled area to remain waterproof.

Advantage 1 Reduce initial cost with digital inkjet printing.

Advantage 2 Reduce initial tooling cost for cutting die with digital cutting plotter.

Advantage 3 Reduce initial tooling cost for embossing with in-house mold processing.

Advantage 4 Shorter lead-time made possible by having all production be in-house.

*applicable to small quantity orders

WC series IP67 PORTABLE PLASTIC CASE

NEW SIZE

IP67

- Double shot injection molded TPE Grip and ABS Body.
- New AAA x 2 battery compartment model added. Case with a CR2032 coin battery, and no battery compartment types are also available. Solder battery contacts on PCB for CR2032 models.
- TPE side grip provides not only a comfortable grip, but also protects from drop impact.
- Suitable to be used as a remote controller, key fob, wireless device, RFID tag, and so on.
- See page 54 for coin battery contact installation steps.

Technical Data

Protection class : IP67
Operating temperature : -10°C ~ +50°C
Recommended torque :
WC72 • WC90 : 0.06 ~ 0.08N • m
WC105 : 0.13 ~ 0.15N • m

WC72-□, WC90-□

WC105-28

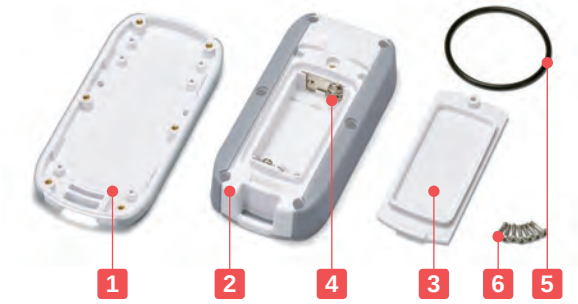

Components

No.	Part name	Pcs	Material	Color / Finish
1	Top cover	1	ABS UL94HB : Elastomer	Black & Black • Black & Marine • White & Light gray
2	Bottom cover	1	ABS UL94HB : Elastomer	Black & Black • Black & Marine • White & Light gray
3	Battery lid*	1	ABS UL94HB	Black • White
4	Battery contact*	1 set	WC72 • WC90 : Stainless steel SUS304 WC105 : Brass • Hard steel wire	Nickel plated
5	O-ring*	1	Silicone	Black
6	Screw	7	Stainless steel SUS304	Unfinished

*Not applicable to the N (no battery compartment type) models.

Accessories (Optional parts)

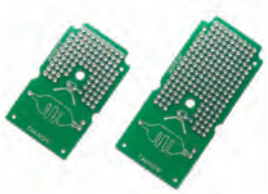

Exclusive PCB WCPB series
See page 56

Strap STPS series
See page 95

PCB mounting screw EM-1.6
See page 123

Neodymium magnet NMG series
See page 117

Coin Battery Contact Installation Steps

Solder the contacts onto the PCB

Install the PCB in the top cover

All set!

CAUTION ■ Use caution when mounting battery contacts.

■ Battery direction is incused on the inner side of the battery lid.

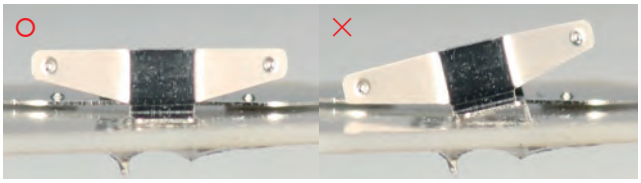

WC72-□, WC90-□

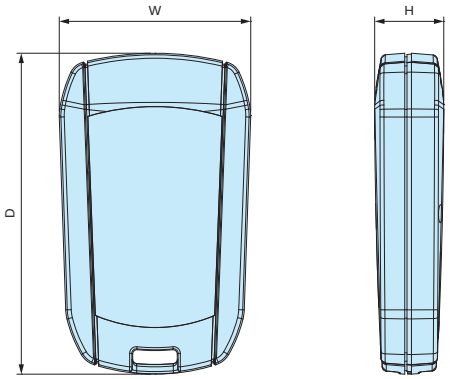

WC105-28

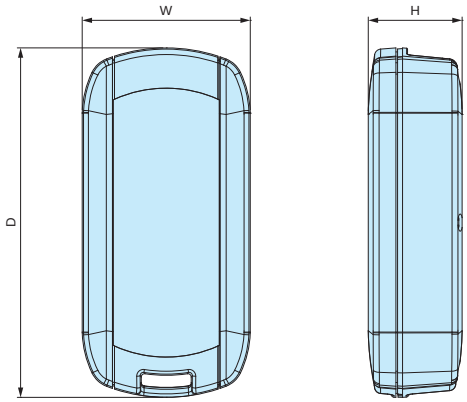

Battery Compartment Types

Type	N	C	F2
	None	CR2032 x 1	AAA x 2
Battery Compartment	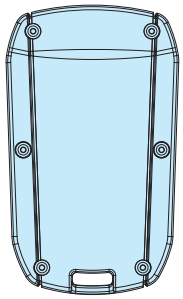	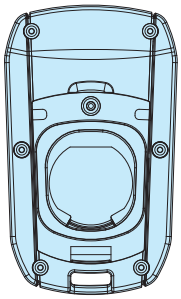	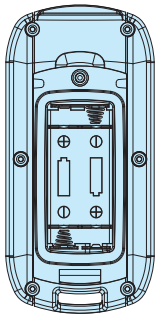

Color Type

Code	B B	B M	W L
Body	Black	Black	White
Grip	Black	Marine	Light gray
Color			

Product no. / Dimensions

■ Please suffix color code at the end of the product number.

Product no.	W	H	D	Battery Compartment	Weight (g)
WC 72-15-N -□□	43	15.5	72	None	18.5
WC 72-15-C -□□	43	15.5	72	CR2032	22
WC 72-21-N -□□	43	21.5	72	None	22
WC 72-21-C -□□	43	21.5	72	CR2032	25.5
WC 90-15-N -□□	44.2	15.7	90	None	23
WC 90-15-C -□□	44.2	15.7	90	CR2032	26.5
WC 90-21-N -□□	44.2	21.7	90	None	27
NEW WC105-28-N -□□	50.5	28.2	105	None	47
NEW WC105-28-F2-□□	50.5	28.2	105	AAA x 2	58.5

WC dimensions

■ DXF/DWG/PDF/STP drawings available on our website.

WC72-15-N / WC72-21-N
WC90-15-N / WC90-21-N
WC105-28-N

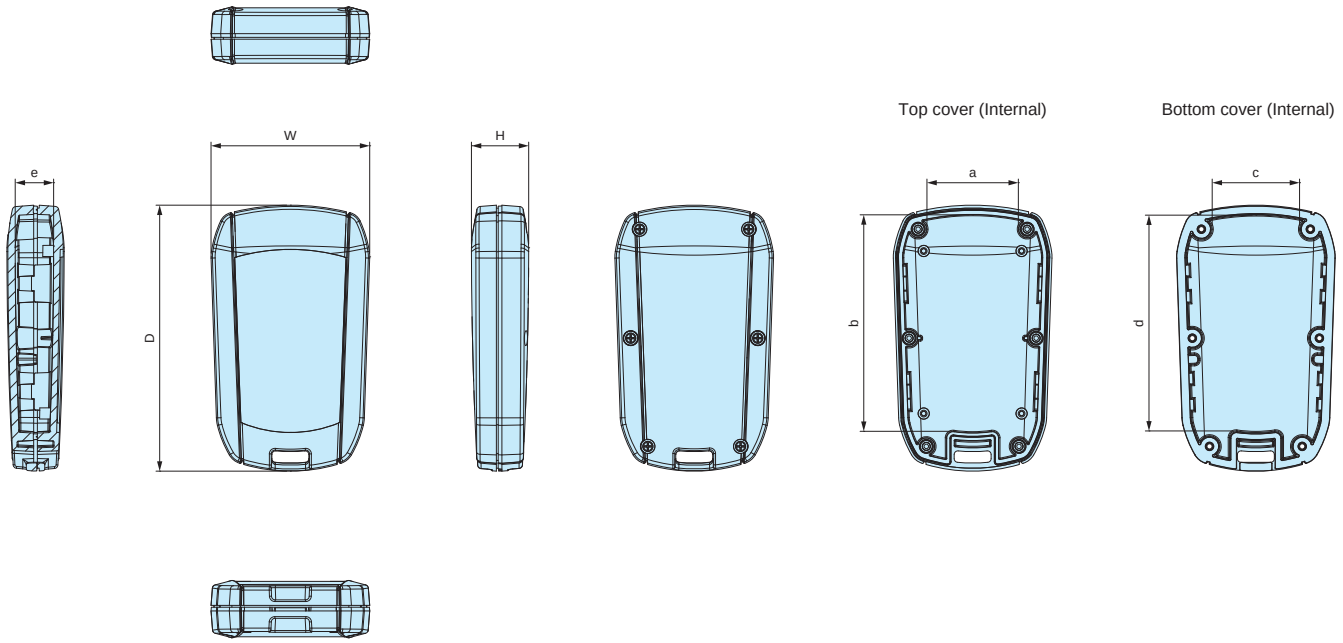

Product no.	W	H	D	a	b	c	d	e
WC 72-15-N-□□	43	15.5	72	24.7	58.6	23.6	58.4	10.4
WC 72-21-N-□□	43	21.5	72	24.7	58.6	23	56.3	16.3
WC 90-15-N-□□	44.2	15.7	90	26.1	76.6	25	76.4	10.4
WC 90-21-N-□□	44.2	21.7	90	26.1	76.6	24.4	74.3	16.4
WC105-28-N-□□	50.5	28.2	105	26.4	87.9	24.2	84.1	22.4

WC72-15-C / WC72-21-C
WC90-15-C
WC105-28-F2

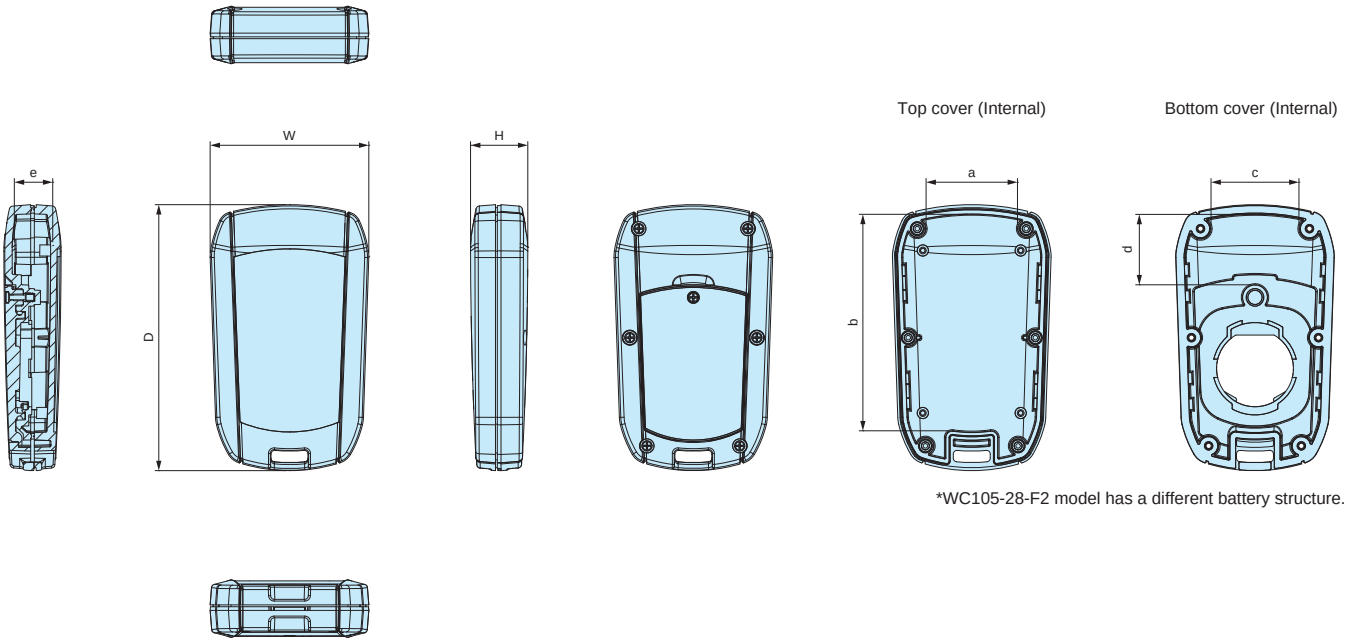

*WC105-28-F2 model has a different battery structure.

Product no.	W	H	D	a	b	c	d	e
WC 72-15-C-□□	43	15.5	72	24.7	58.6	23.8	19	10.4
WC 72-21-C-□□	43	21.5	72	24.7	58.6	23	17.3	16.3
WC 90-15-C-□□	44.2	15.7	90	26.1	76.6	25	36.9	10.4
WC105-28-F2-□□	50.5	28.2	105	26.4	87.9	24.2	14	22.4

WCPB series EXCLUSIVE PCB for WC

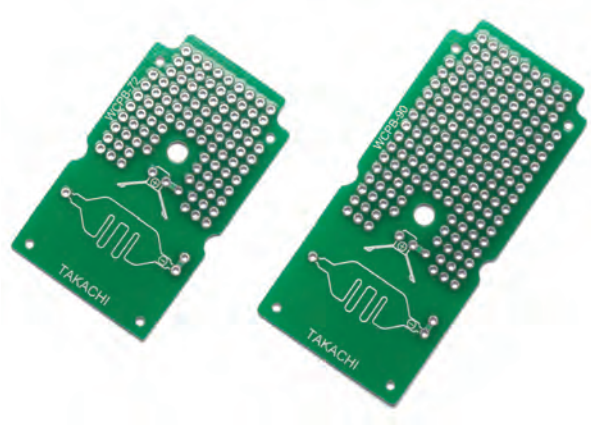

- Exclusive PCB for C-type of CR2032 models.
- Glass epoxy board (FR-4), through-holes on both sides, 2.54mm hold pitch.
- Designed with a battery contact hole. Battery contact position and direction are printed onto the PCB.

Please use battery contacts included with WC C-type of CR2032 models

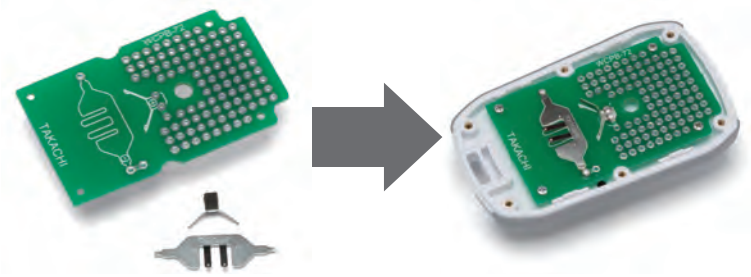

WCPB dimensions

- DXF/DWG/PDF/STP drawings available on our website.

WCPB-72

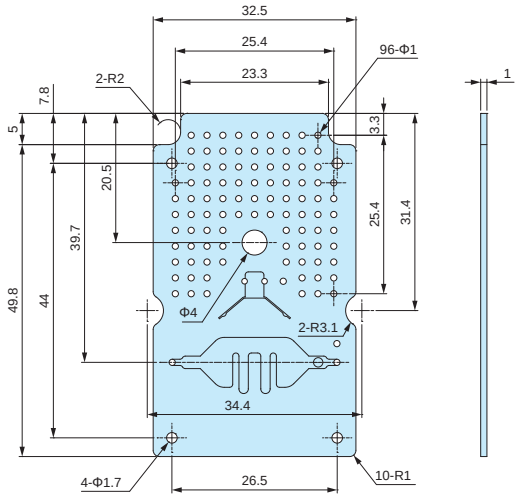

WCPB-90

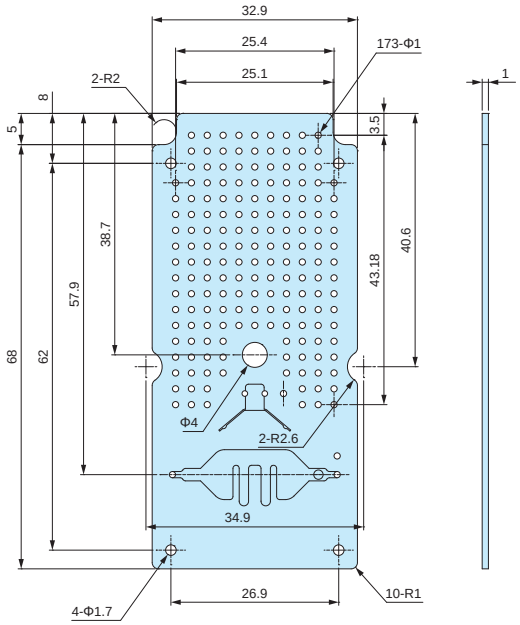

Note : Holes (4-Φ1.7) for PCB mounting bosses are un-soldered.

Components

Part name	Pcs	Material	Color / Finish
PCB	1	Glass epoxy (FR-4) t=1.0	Through-hole • Lead-free Solder • resist
Screw	4	Steel (Tapping M1.6-4)	Trivalent chromate

Product no. / Dimensions

Product no.	Suitable case
WCPB-72	WC72-15-C
	WC72-21-C
WCPB-90	WC90-15-C

Battery contact position details

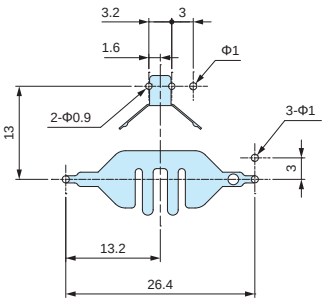

WH series

IP67 WATERPROOF HAND-HELD ENCLOSURE

IP67 is

●IEC60529 standard is a system for classifying the degrees of protection provided by the enclosures of electrical equipment, such as against dust and water.

IP6x : No ingress of dust; complete protection against contact (dust tight).
IPx7 : No ingress of water when submerged up to a depth of 1 m for 30 min

High waterproof performance with a silicone gasket

High elasticity and good durability for maintaining waterproofing capability.
Built-in insert nut use for great long lasting water protection even after frequent opening and closing. Battery compartment is also waterproofed.
Various battery compartment types are available, ranging from AAA x2, to AA x6.

Side grip provides great protection

Elastic TPE grips provides for a more secured hold. Side grips are designed to be on the sides and corners of the enclosure to minimize drop impact.

Available in 10 different color combinations

Information on waterproofing overlay sheets

APPLICATION EXAMPLE

Note that waterproofing will be invalidated if a hole is made for button or switch on waterproof enclosures.
Please utilize a waterproof (IP67 rated equivalent) membrane keypad or switch, or overlay sheet for maintaining IP67.
See page Custom-1 ~ Custom-2 for further details of digital printed overlay.

APPLICATION EXAMPLE

Suitable for industrial measuring instruments, transceivers, controllers, medical equipment and so on.

Portable Signal Generator

Product by Candox Systems (Japan)

Wireless CO_2 Microclimate Sensor

Product by GrowFlux (USA)

Wireless Food Probe Sensor

Product by Monnit (USA)

Wireless Temperature Detector

Product by BRESIMAR AUTOMAÇÃO (Portugal)

Sigfox Network Measurement Device

Product by Simple Hardware (Czech Republic)

IoT Temperature Monitoring Sensor for HACCP

Product by RATOC Systems (Japan)

*See page 91 for further details of Sigfox.

Competition Time Measurement System

Photo by TRAC (Japan)
Product by NIKKEN SOGYO (Japan)

Portable Airflow Meter

Product by KENEK (Japan)

Honey Bee Tracker

Product by APiS Technology (Portugal)

Digital X-ray System

Product by SmartRayVision (USA)

WH series IP67 HAND-HELD ENCLOSURE

Technical Data
Protection class : IP67 Operating temperature : -10°C ~ +60°C Recommended torque: 0.2N • m ~ 0.3N • m (2kgf • cm ~ 3kgf • cm)

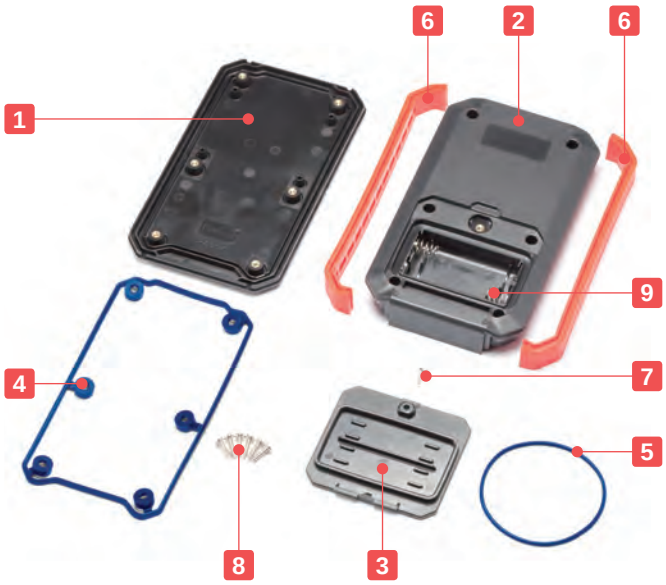

- Stylish and elegantly designed with chamfered edge construction.
- IP67 protection class enclosure.
- Manufactured from flame-resistant ABS UL94V-0 material.
- 8 different internal compartment types are available: AAA x 2, AAA x 3, AAA x 4, AA x 2, AA x 3, AA x 4, AA x 6 and no battery type. Battery compartments have positive (+) / negative (-) pole mark to prevent incorrect insertion.
- The TPE side grips are available in 5 unique colors, and functions as an anti-slip grip pad and drop impact protection.

Components

No.	Part name	Pcs	Material	Color / Finish
1	Top cover	1	ABS UL94V-0	Off-white • Black
2	Bottom cover	1	ABS UL94V-0	Off-white • Black
3	Battery cover *	1	ABS UL94V-0	Off-white • Black
4	Gasket	1	Silicone	N • F2 • F3 • M4 type : Black M2 • M6 type : Blue M3 • F4 • type : Light gray
5	O-ring *	1	Silicone	
6	Side grip	2	TPE	Black • Light gray • Navy • Red • Yellow
7	Battery cover screw *	1	Stainless steel M2.5-8	Unfinished
8	Screw	6	Stainless steel M2.5-10	Unfinished
9	Battery contact *	1 set	Brass	Nickel plated

* Not applicable to the N (no battery compartment type) models.

Accessories (Optional parts)

PCB mounting screw EM-2.3
See page 123

Tapping standoff TPS series
See page 122

Cable gland
See page 333 ~ 340

Neodymium magnet NMG series
See page 117

Battery Compartment Types

Type	N None	F2 AAA x 2	F3 AAA x 3	F4 AAA x 4	M2 AA x 2	M3 AA x 3	M4 AA x 4	M6 AA x 6
Battery Compartment	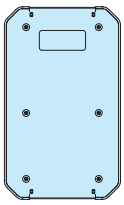	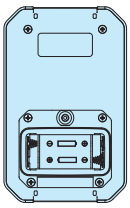	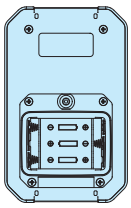	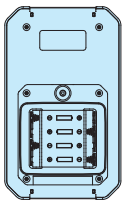	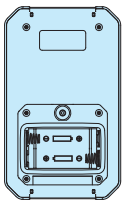	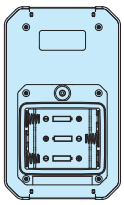	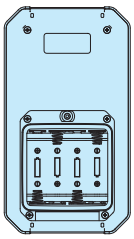	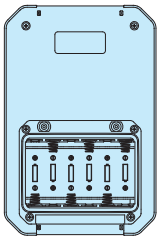

Color Type

Code	B B Black / Black	B L Black / Light gray	B N Black / Navy	B R Black / Red	B Y Black / Yellow
Color					
Code	**W B Off-white / Black**	**W L Off-white / Light gray**	**W N Off-white / Navy**	**W R Off-white / Red**	**W Y Off-white / Yellow**
Color					

WH dimensions

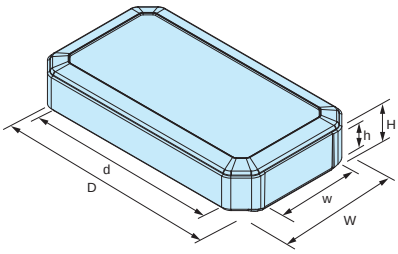

■ DXF/DWG/PDF/STP drawings available on our website.

Product no. / Dimensions

Product no.	External dimensions			Internal dimensions			Battery compartment	Weight (g)
	W	H	D	w	h	d		
WH125-20-N -□□	79	20	126	39	9	107.7	None	101.0
WH125-20-F2 -□□	79	20	126	60	9	46.4	AAA x 2	102.0
WH125-20-F3 -□□	79	20	126	60	9	35.9	AAA x 3	109.0
WH125-28-N -□□	79	28	126	39	17	106.3	None	119.0
WH125-28-F2 -□□	79	28	126	60	17	46.4	AAA x 2	121.0
WH125-28-F3 -□□	79	28	126	60	17	35.9	AAA x 3	127.0
WH145-20-N -□□	88	20	146	45	8	129.6	None	125.5
WH145-20-F4 -□□	88	20	146	69.4	8	36.5	AAA x 4	129.5
WH145-25-N -□□	88	25	146	45	13	129.6	None	137.5
WH145-25-M2 -□□	88	25	146	69.2	13	51.5	AA x 2	161.5
WH145-25-M3 -□□	88	25	146	69.2	13	36.5	AA x 3	159.5
WH145-33-N -□□	88	33	146	45	21	129.6	None	162.0
WH145-33-M2 -□□	88	33	146	69.2	21	51.5	AA x 2	180.5
WH145-33-M3 -□□	88	33	146	69.2	21	36.5	AA x 3	181.5
WH170-25-N -□□	95	25	171	51	13	154.4	None	169.0
WH170-25-M4 -□□	95	25	171	73.2	13	54.8	AA x 4	195.0
WH170-33-N -□□	95	33	171	50.9	21	150.7	None	191.0
WH170-33-M4 -□□	95	33	171	73.2	21	54.8	AA x 4	220.0
WH190-25-N -□□	126	25	191	81	13	170.3	None	226.0
WH190-25-M6 -□□	126	25	191	107.6	13	72.6	AA x 6	276.0
WH190-33-N -□□	126	33	191	81	21	170.3	None	252.0
WH190-33-M6 -□□	126	33	191	107	21	72.3	AA x 6	307.0

LCT•LCS•LC•LCE HAND-HELD PLASTIC CASE

Hand-held case suitable for industrial measuring equipment, wireless communication devices and medical equipment.
9 different sizes with 8 different battery compartment types line-up available.
Consisting of a line-up of 4 different series: LC - plastic case, LCT - case with shockproof silicone cover, LCS - case with silicone cover, and LCE - EMC shielded plastic case.

LCT Plastic Case with Shockproof Silicone Cover - 4 Rugged Shockproof Silicone Cover Colors

Orange

Green

Navy Blue

Dark Gray

LCS Plastic Case with Silicone Cover - 5 Silicone Cover Colors

Red

Green

Blue

Dark Gray

Light Gray

CUSTOMIZATION

Machining

Custom cut on silicone cover

Custom color, custom shaped silicone cover

Digital printed overlay

APPLICATION EXAMPLE

Metal Coating Thickness Gauge

Product by NOVOTEST (Ukraine)

Solar Panel Trouble Checker

Product by ITES (Japan)

Solar Cell Connection Checker

Product by Shinei Electronic Measuring (Japan)

Digital Pressure Gauge Setter

Product by NAGANO KEIKI (Japan)

Fluorescent Portable Dissolved Oxygen Meter

Product by Automatic system Research (Japan)

Distribution Transformer Tester

Product by ndb Technologies (Canada)

Network Partial Discharge Checker

Product by ndb Technologies (Canada)

Radiation Survey Meter

Product by HISAKI Sekkei (Japan)

Mini Radiation Survey Meter

Product by Techno AP (Japan)

Wireless Voltage Probe

Product by Enertronics (Switzerland)

Portable Anemometer

Product by FieldPro (Japan)

Ultrasonic Thickness Gauge

Product by DEMEQ (Argentina)

Hyperhidrosis Treatment Device

Product by Merebit (Czech Republic)

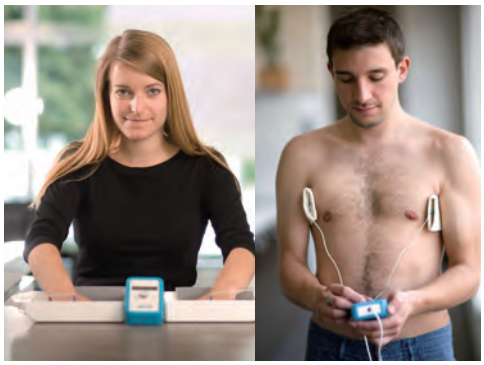

RF Scope

Product by Arrow7 Corporation (Japan)

Satellite Broadcasting Signal Generator

Product by MASPRO (Japan)

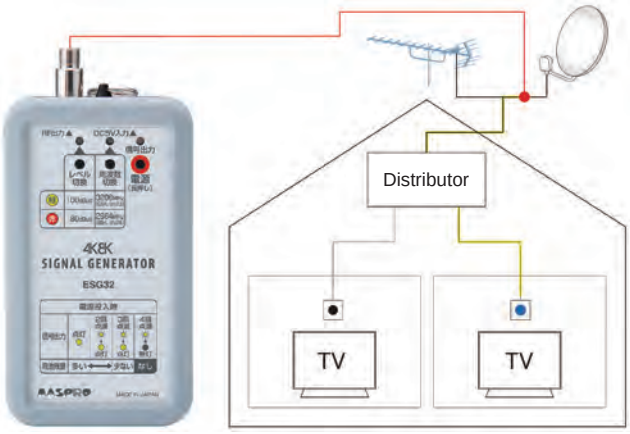

Onboard Programmer

Product by Hokuto Electronic (Japan)

Code Debugger

Product by BITRAN (Japan)

LCT series HAND-HELD CASE with SHOCKPROOF SILICONE COVER

Technical Data
Protection class: IP40 Operating temperature: -10°C ~ +60°C

- Plastic case with shockproof silicone cover. Protects the device from various impact.
- Manufactured with flame-resistant ABS UL94V-0 material. Selectable from a range of battery compartment types.
- Positive (+) / Negative (-) pole marks are incused on the inside of the battery compartments.
- Suitable for measuring instruments, test devices, wireless communication devices, medical devices and so on.

Battery compartment type

No battery compartment type

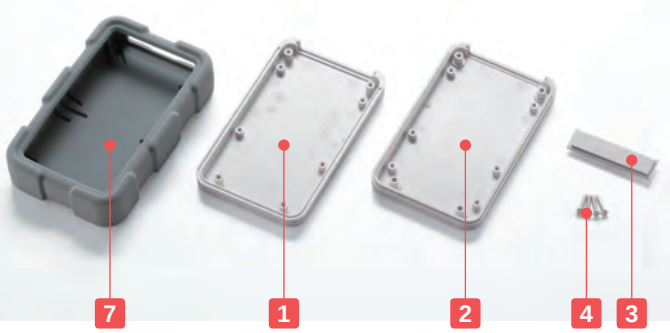

Components

No.	Part name	Pcs	Material	Color / Finish
1	Top cover	1	ABS UL94V-0	Off-white • Dark gray
2	Bottom cover	1	ABS UL94V-0	Off-white • Dark gray
3	Panel	1	ABS UL94V-0	Off-white • Dark gray
4	Self-tapping screw	4	Steel M2.6	Nickel plated • Black trivalent chromate
5	Battery cover	1	ABS UL94V-0	Off-white • Dark gray
6	Battery contact • Battery snap	1 set	Brass • Brass : PVC	Nickel plated • Nickel plated : Black
7	Silicone cover	1	Silicone	Orange • Green • Navy • Dark gray

Accessories (Optional parts)

Tapping standoff TPS series
See page 122

PCB mounting screw EM-2.3
See page 123

TORX screw MR series
See page 123

Key ring CR-20
See page 96

Strap STP series
See page 96

Battery Compartment Type

Type	N None	F2 AAA x 2	F3 AAA x 3	F4 AAA x 4	F6 AAA x 6	M2 AA x 2	M3 AA x 3	M4 AA x 4	9V 9V x 1
Battery compartment	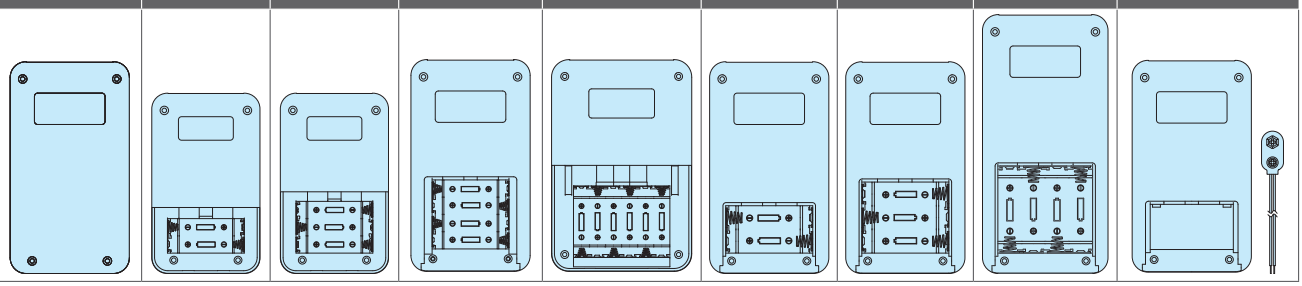								

Color Type

Code	DO Dark gray / Orange	DG Dark gray / Green	DN Dark gray / Navy	DD Dark gray / Dark gray
Color				
Code	WO Off-white / Orange	WG Off-white / Green	WN Off-white / Navy	WD Off-white / Dark gray
Color				

Product no. / Dimensions

■ Please suffix color code at the end of the product number.

Product no.	W	H	D	Battery compartment	Weight (g)
LCT115 -N -□□	76(69)	28(19.5)	121.9(115)	None	123.5
LCT115 -F2 -□□	76(69)	28(19.5)	121.9(115)	AAA x 2	128
LCT115 -F3 -□□	76(69)	28(19.5)	121.9(115)	AAA x 3	130
LCT115H-N -□□	76(69)	36.5(28)	121.9(115)	None	141
LCT115H-F2 -□□	76(69)	36.5(28)	121.9(115)	AAA x 2	145.5
LCT115H-F3 -□□	76(69)	36.5(28)	121.9(115)	AAA x 3	147
LCT115H-M2-□□	76(69)	36.5(28)	121.9(115)	AA x 2	149.5
LCT115H-9V -□□	76(69)	36.5(28)	121.9(115)	9V x 1	149
LCT135 -N -□□	85(76)	40(27)	143.9(135)	None	210.5
LCT135 -F4 -□□	85(76)	40(27)	143.9(135)	AAA x 4	225.5
LCT135 -M2-□□	85(76)	40(27)	143.9(135)	AA x 2	223.5
LCT135 -M3-□□	85(76)	40(27)	143.9(135)	AA x 3	229
LCT135 -9V -□□	85(76)	40(27)	143.9(135)	9V x 1	227
LCT135H-N -□□	85(76)	48(35)	143.9(135)	None	231.5
LCT135H-F4 -□□	85(76)	48(35)	143.9(135)	AAA x 4	246
LCT135H-M2-□□	85(76)	48(35)	143.9(135)	AA x 2	245
LCT135H-M3-□□	85(76)	48(35)	143.9(135)	AA x 3	250
LCT135H-9V -□□	85(76)	48(35)	143.9(135)	9V x 1	247.5
LCT145 -N -□□	105(96)	40(27)	153.9(145)	None	258.5
LCT145 -F6 -□□	105(96)	40(27)	153.9(145)	AAA x 6	278.5
LCT145 -M2-□□	105(96)	40(27)	153.9(145)	AA x 2	272.5
LCT145 -M4-□□	105(96)	40(27)	153.9(145)	AA x 4	279.5
LCT145H-N -□□	105(96)	48(35)	153.9(145)	None	282
LCT145H-F6 -□□	105(96)	48(35)	153.9(145)	AAA x 6	302.5
LCT145H-M2-□□	105(96)	48(35)	153.9(145)	AA x 2	296
LCT145H-M4-□□	105(96)	48(35)	153.9(145)	AA x 4	303
LCT165 -N -□□	89(80)	40(27)	173.9(165)	None	263.5
LCT165 -M4-□□	89(80)	40(27)	173.9(165)	AA x 4	283
LCT165H-N -□□	89(80)	48(35)	173.9(165)	None	286
LCT165H-M4-□□	89(80)	48(35)	173.9(165)	AA x 4	305

■ ( ) value = enclosure dimension.

Silicone cover dimensions

■ DXF/DWG/PDF drawings available on our website.

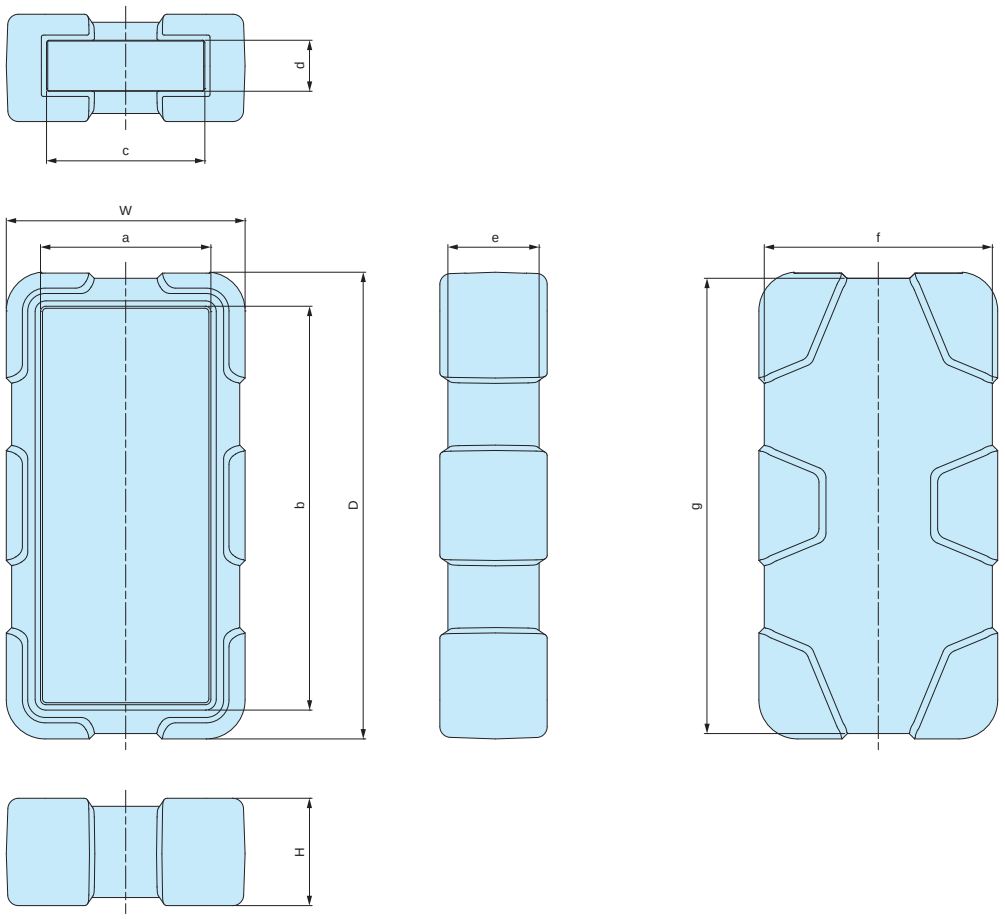

Product no.	W	H	D	a	b	c	d	e	f	g
LCT115 -N -□□	76	28	121.9	55.5	101.5	48.3	12	24	72	117.8
LCT115 -F2 -□□	76	28	121.9	55.5	101.5	48.3	12	24	72	117.8
LCT115 -F3 -□□	76	28	121.9	55.5	101.5	48.3	12	24	72	117.8
LCT115H-N -□□	76	36.5	121.9	55.5	101.5	48.3	20.5	32.5	72	117.8
LCT115H-F2 -□□	76	36.5	121.9	55.5	101.5	48.3	20.5	32.5	72	117.8
LCT115H-F3 -□□	76	36.5	121.9	55.5	101.5	48.3	20.5	32.5	72	117.8
LCT115H-M2-□□	76	36.5	121.9	55.5	101.5	48.3	20.5	32.5	72	117.8
LCT115H-9V -□□	76	36.5	121.9	55.5	101.5	48.3	20.5	32.5	72	117.8
LCT135 -N -□□	85	40	143.9	59.5	118.5	55	19	34	81	139.7
LCT135 -F4 -□□	85	40	143.9	59.5	118.5	55	19	34	81	139.7
LCT135 -M2-□□	85	40	143.9	59.5	118.5	55	19	34	81	139.7
LCT135 -M3-□□	85	40	143.9	59.5	118.5	55	19	34	81	139.7
LCT135 -9V -□□	85	40	143.9	59.5	118.5	55	19	34	81	139.7
LCT135H-N -□□	85	48	143.9	59.5	118.5	55	27	42	81	139.6
LCT135H-F4 -□□	85	48	143.9	59.5	118.5	55	27	42	81	139.6
LCT135H-M2-□□	85	48	143.9	59.5	118.5	55	27	42	81	139.6
LCT135H-M3-□□	85	48	143.9	59.5	118.5	55	27	42	81	139.6
LCT135H-9V -□□	85	48	143.9	59.5	118.5	55	27	42	81	139.6
LCT145 -N -□□	105	40	153.9	76.5	125.5	71	19	34	101	149.7
LCT145 -F6 -□□	105	40	153.9	76.5	125.5	71	19	34	101	149.7
LCT145 -M2-□□	105	40	153.9	76.5	125.5	71	19	34	101	149.7
LCT145 -M4-□□	105	40	153.9	76.5	125.5	71	19	34	101	149.7
LCT145H-N -□□	105	48	153.9	76.5	125.5	71	27	42	101	149.7
LCT145H-F6 -□□	105	48	153.9	76.5	125.5	71	27	42	101	149.7
LCT145H-M2-□□	105	48	153.9	76.5	125.5	71	27	42	101	149.7
LCT145H-M4-□□	105	48	153.9	76.5	125.5	71	27	42	101	149.7
LCT165 -N -□□	89	40	173.9	63.5	148.5	59	19	34	85	169.7
LCT165 -M4-□□	89	40	173.9	63.5	148.5	59	19	34	85	169.7
LCT165H-N -□□	89	48	173.9	63.5	148.5	59	27	42	85	169.6
LCT165H-M4-□□	89	48	173.9	63.5	148.5	59	27	42	85	169.6

Enclosure dimensions

■ DXF/DWG/PDF/STP drawings available on our website.

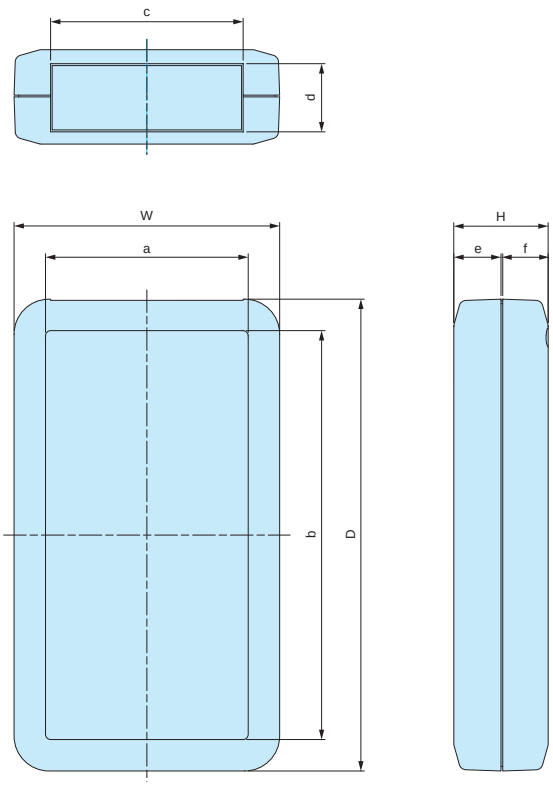

■ Please suffix color code at the end of the product number.

Product no.	W	H	D	a	b	c	d	e	f	Battery compartment
LCT115 -N -□□	69	19.5	115	54	100	48.1	12	10	9	None
LCT115 -F2 -□□	69	19.5	115	54	100	48.1	12	10	9	AAA x 2
LCT115 -F3 -□□	69	19.5	115	54	100	48.1	12	10	9	AAA x 3
LCT115H -N -□□	69	28	115	54	100	48.1	20.5	18.5	9	None
LCT115H -F2 -□□	69	28	115	54	100	48.1	20.5	18.5	9	AAA x 2
LCT115H -F3 -□□	69	28	115	54	100	48.1	20.5	18.5	9	AAA x 3
LCT115H -M2 -□□	69	28	115	54	100	48.1	20.5	18.5	9	AA x 2
LCT115H -9V -□□	69	28	115	54	100	48.1	20.5	18.5	9	9V x 1
LCT135 -N -□□	76	27	135	58	117	55.1	19.5	13.5	13	None
LCT135 -F4 -□□	76	27	135	58	117	55.1	19.5	13.5	13	AAA x 4
LCT135 -M2 -□□	76	27	135	58	117	55.1	19.5	13.5	13	AA x 2
LCT135 -M3 -□□	76	27	135	58	117	55.1	19.5	13.5	13	AA x 3
LCT135 -9V -□□	76	27	135	58	117	55.1	19.5	13.5	13	9V x 1
LCT135H -N -□□	76	35	135	58	117	55.1	27.5	21.5	13	None
LCT135H -F4 -□□	76	35	135	58	117	55.1	27.5	21.5	13	AAA x 4
LCT135H -M2 -□□	76	35	135	58	117	55.1	27.5	21.5	13	AA x 2
LCT135H -M3 -□□	76	35	135	58	117	55.1	27.5	21.5	13	AA x 3
LCT135H -9V -□□	76	35	135	58	117	55.1	27.5	21.5	13	9V x 1
LCT145 -N -□□	96	27	145	75	124	71.1	19.5	14.5	12	None
LCT145 -F6 -□□	96	27	145	75	124	71.1	19.5	14.5	12	AAA x 6
LCT145 -M2 -□□	96	27	145	75	124	71.1	19.5	14.5	12	AA x 2
LCT145 -M4 -□□	96	27	145	75	124	71.1	19.5	14.5	12	AA x 4
LCT145H -N -□□	96	35	145	75	124	71.1	27.5	22.5	12	None
LCT145H -F6 -□□	96	35	145	75	124	71.1	27.5	22.5	12	AAA x 6
LCT145H -M2 -□□	96	35	145	75	124	71.1	27.5	22.5	12	AA x 2
LCT145H -M4 -□□	96	35	145	75	124	71.1	27.5	22.5	12	AA x 4
LCT165 -N -□□	80	27	165	62	147	59.1	19.5	13.5	13	None
LCT165 -M4 -□□	80	27	165	62	147	59.1	19.5	13.5	13	AA x 4
LCT165H -N -□□	80	35	165	62	147	59.1	27.5	21.5	13	None
LCT165H -M4 -□□	80	35	165	62	147	59.1	27.5	21.5	13	AA x 4

LCS series HAND-HELD CASE with SILICONE COVER

Technical Data
Protection class: IP40 Operating temperature: -10°C ~ +60°C

- Plastic case with silicone cover providing not only comfortable and anti-slip grip, but also protection from drop impact.
- Manufactured with flame-resistant ABS UL94V-0. Several battery compartment types are available.
- Positive (+) / negative (-) pole mark are incused on the inside of the battery compartments.
- Suitable for measuring instruments, test devices, wireless communication devices, medical devices and so on.

Components

No.	Part name	Pcs	Material	Color / Finish
1	Top cover	1	ABS UL94V-0	Off-white • Dark gray
2	Bottom cover	1	ABS UL94V-0	Off-white • Dark gray
3	Panel	1	ABS UL94V-0	Off-white • Dark gray
4	Self-tapping screw	4	Steel M2.6	Nickel plated • Black trivalent chromate
5	Battery cover	1	ABS UL94V-0	Off-white • Dark gray
6	Battery contact • Battery snap	1 set	Brass • Brass : PVC	Nickel plated • Nickel plated : Black
7	Silicone cover	1	Silicone	Red • Green • Blue • Light gray • Dark gray

Accessories (Optional parts)

Tapping standoff TPS series
See page 122

PCB mounting screw EM-2.3
See page 123

TORX screw MR series
See page 123

Key ring CR-20
See page 96

Strap STP series
See page 96

Battery Compartment Type

Type	N None	F2 AAA x 2	F3 AAA x 3	F4 AAA x 4	F6 AAA x 6	M2 AA x 2	M3 AA x 3	M4 AA x 4	9V 9V x 1
Battery compartment	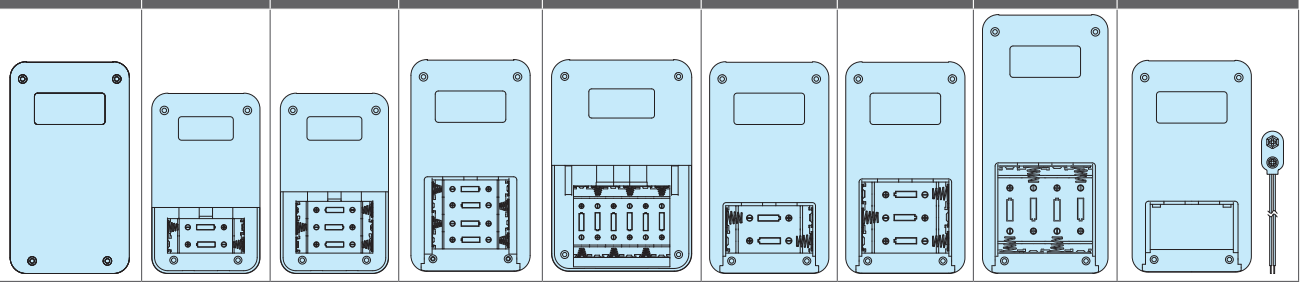								

Color Type

Code	DR Dark gray / Red	DG Dark gray / Green	DB Dark gray / Blue	DD Dark gray / Dark gray	DL Dark gray / Light gray
Color					
Code	**WR Off-white / Red**	**WG Off-white / Green**	**WB Off-white / Blue**	**WD Off-white / Dark gray**	**WL Off-white / Light gray**
Color					

Product no. / Dimensions

■ Please suffix color code at the end of the product number.

Product no.	W	H	D	Battery compartment	Weight (g)
LCS115 -N -□□	74(69)	24(19.5)	120(115)	None	113
LCS115 -F2 -□□	74(69)	24(19.5)	120(115)	AAA x 2	117.5
LCS115 -F3 -□□	74(69)	24(19.5)	120(115)	AAA x 3	119.5
LCS115H-N -□□	74(69)	32.5(28)	120(115)	None	130
LCS115H-F2 -□□	74(69)	32.5(28)	120(115)	AAA x 2	134.5
LCS115H-F3 -□□	74(69)	32.5(28)	120(115)	AAA x 3	136
LCS115H-M2-□□	74(69)	32.5(28)	120(115)	AA x 2	138.5
LCS115H-9V -□□	74(69)	32.5(28)	120(115)	9V x 1	138
LCS135 -N -□□	81(76)	32(27)	141(135)	None	165
LCS135 -F4 -□□	81(76)	32(27)	141(135)	AAA x 4	180
LCS135 -M2-□□	81(76)	32(27)	141(135)	AA x 2	178
LCS135 -M3-□□	81(76)	32(27)	141(135)	AA x 3	183.5
LCS135 -9V -□□	81(76)	32(27)	141(135)	9V x 1	181.5
LCS135H-N -□□	81(76)	40(35)	141(135)	None	183
LCS135H-F4 -□□	81(76)	40(35)	141(135)	AAA x 4	197.5
LCS135H-M2-□□	81(76)	40(35)	141(135)	AA x 2	196.5
LCS135H-M3-□□	81(76)	40(35)	141(135)	AA x 3	201.5
LCS135H-9V -□□	81(76)	40(35)	141(135)	9V x 1	199
LCS145 -N -□□	101(96)	32(27)	151(145)	None	202
LCS145 -F6 -□□	101(96)	32(27)	151(145)	AAA x 6	222
LCS145 -M2-□□	101(96)	32(27)	151(145)	AA x 2	216
LCS145 -M4-□□	101(96)	32(27)	151(145)	AA x 4	223
LCS145H-N -□□	101(96)	40(35)	151(145)	None	224
LCS145H-F6 -□□	101(96)	40(35)	151(145)	AAA x 6	244.5
LCS145H-M2-□□	101(96)	40(35)	151(145)	AA x 2	238
LCS145H-M4-□□	101(96)	40(35)	151(145)	AA x 4	245
LCS165 -N -□□	85(80)	32(27)	171(165)	None	203
LCS165 -M4-□□	85(80)	32(27)	171(165)	AA x 4	222.5
LCS165H-N -□□	85(80)	40(35)	171(165)	None	220.5
LCS165H-M4-□□	85(80)	40(35)	171(165)	AA x 4	239.5

■ ( ) value = enclosure dimension.

Silicone cover dimensions

■ DXF/DWG/PDF drawings available on our website.

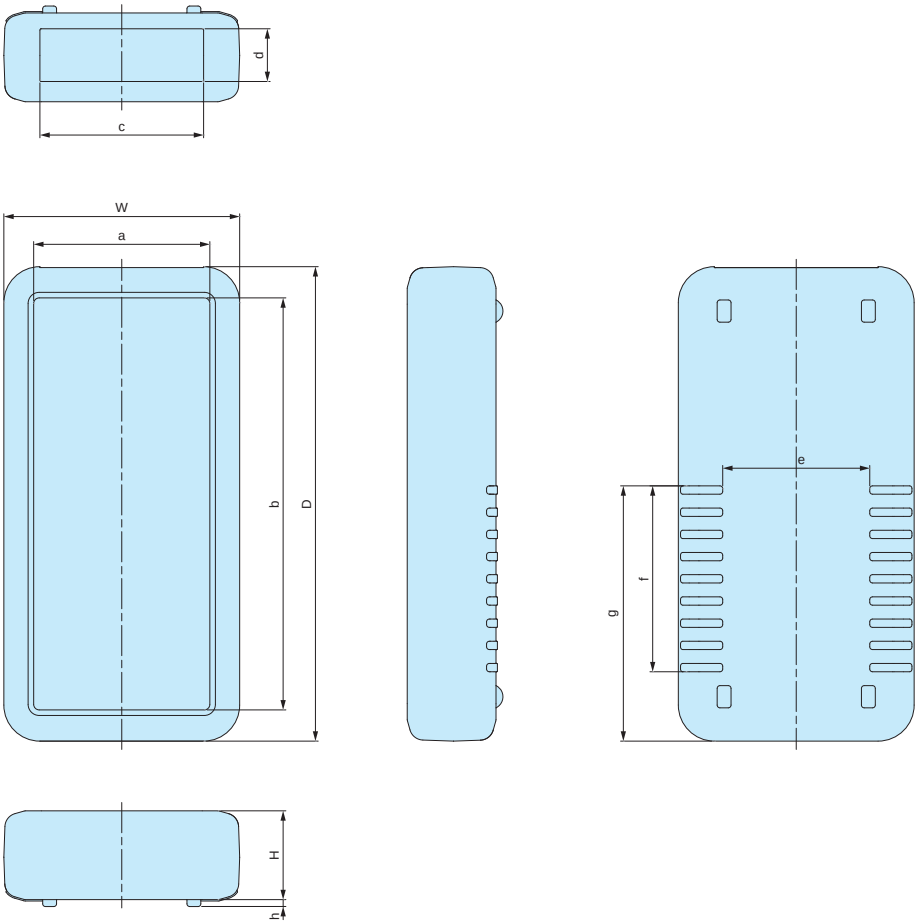

Product no.	W	H	D	a	b	c	d	e	f	g	h
LCS115 -N -□□	74	24	120	55.5	101.5	48.3	12	46	44.5	60.5	2
LCS115 -F2 -□□	74	24	120	55.5	101.5	48.3	12	46	44.5	60.5	2
LCS115 -F3 -□□	74	24	120	55.5	101.5	48.3	12	46	44.5	60.5	2
LCS115H-N -□□	74	32.5	120	55.5	101.5	48.3	20.5	46	44.5	60.5	2
LCS115H-F2 -□□	74	32.5	120	55.5	101.5	48.3	20.5	46	44.5	60.5	2
LCS115H-F3 -□□	74	32.5	120	55.5	101.5	48.3	20.5	46	44.5	60.5	2
LCS115H-M2-□□	74	32.5	120	55.5	101.5	48.3	20.5	46	44.5	60.5	2
LCS115H-9V -□□	74	32.5	120	55.5	101.5	48.3	20.5	46	44.5	60.5	2
LCS135 -N -□□	81	32	141	59.5	118.5	55	19	53	59	79	2.5
LCS135 -F4 -□□	81	32	141	59.5	118.5	55	19	53	59	79	2.5
LCS135 -M2-□□	81	32	141	59.5	118.5	55	19	53	59	79	2.5
LCS135 -M3-□□	81	32	141	59.5	118.5	55	19	53	59	79	2.5
LCS135 -9V -□□	81	32	141	59.5	118.5	55	19	53	59	79	2.5
LCS135H-N -□□	81	40	141	59.5	118.5	55	27	53	59	79	2.5
LCS135H-F4 -□□	81	40	141	59.5	118.5	55	27	53	59	79	2.5
LCS135H-M2-□□	81	40	141	59.5	118.5	55	27	53	59	79	2.5
LCS135H-M3-□□	81	40	141	59.5	118.5	55	27	53	59	79	2.5
LCS135H-9V -□□	81	40	141	59.5	118.5	55	27	53	59	79	2.5
LCS145 -N -□□	101	32	151	76.5	125.5	71	19	71	59	81	2.5
LCS145 -F6 -□□	101	32	151	76.5	125.5	71	19	71	59	81	2.5
LCS145 -M2-□□	101	32	151	76.5	125.5	71	19	71	59	81	2.5
LCS145 -M4-□□	101	32	151	76.5	125.5	71	19	71	59	81	2.5
LCS145H-N -□□	101	40	151	76.5	125.5	71	27	71	59	81	2.5
LCS145H-F6 -□□	101	40	151	76.5	125.5	71	27	71	59	81	2.5
LCS145H-M2-□□	101	40	151	76.5	125.5	71	27	71	59	81	2.5
LCS145H-M4-□□	101	40	151	76.5	125.5	71	27	71	59	81	2.5
LCS165 -N -□□	85	32	171	63.5	148.5	59	19	53	67	92	2.5
LCS165 -M4-□□	85	32	171	63.5	148.5	59	19	53	67	92	2.5
LCS165H-N -□□	85	40	171	63.5	148.5	59	27	53	67	92	2.5
LCS165H-M4-□□	85	40	171	63.5	148.5	59	27	53	67	92	2.5

Enclosure dimensions

■ DXF/DWG/PDF/STP drawings available on our website.

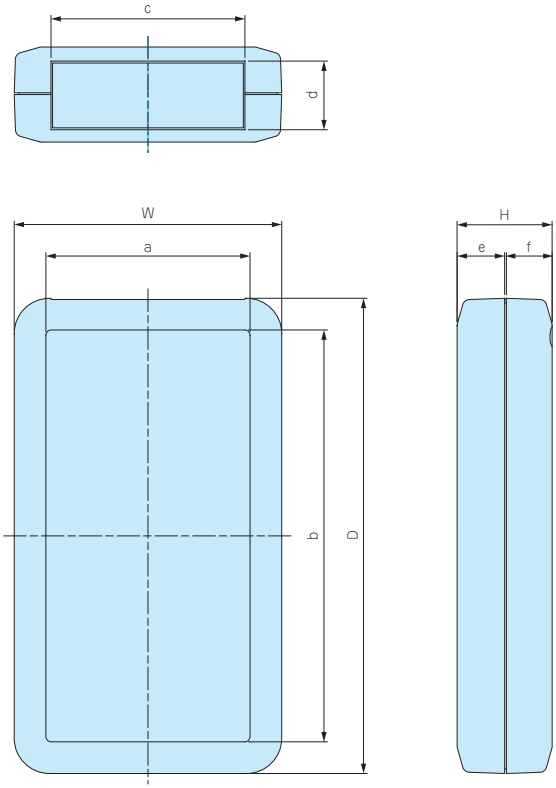

■ Please suffix color code at the end of the product number.

Product no.	W	H	D	a	b	c	d	e	f	Battery compartment
LCS115 -N -□□	69	19.5	115	54	100	48.1	12	10	9	None
LCS115 -F2 -□□	69	19.5	115	54	100	48.1	12	10	9	AAA x 2
LCS115 -F3 -□□	69	19.5	115	54	100	48.1	12	10	9	AAA x 3
LCS115H-N -□□	69	28	115	54	100	48.1	20.5	18.5	9	None
LCS115H-F2 -□□	69	28	115	54	100	48.1	20.5	18.5	9	AAA x 2
LCS115H-F3 -□□	69	28	115	54	100	48.1	20.5	18.5	9	AAA x 3
LCS115H-M2-□□	69	28	115	54	100	48.1	20.5	18.5	9	AA x 2
LCS115H-9V -□□	69	28	115	54	100	48.1	20.5	18.5	9	9V x 1
LCS135 -N -□□	76	27	135	58	117	55.1	19.5	13.5	13	None
LCS135 -F4 -□□	76	27	135	58	117	55.1	19.5	13.5	13	AAA x 4
LCS135 -M2-□□	76	27	135	58	117	55.1	19.5	13.5	13	AA x 2
LCS135 -M3-□□	76	27	135	58	117	55.1	19.5	13.5	13	AA x 3
LCS135 -9V -□□	76	27	135	58	117	55.1	19.5	13.5	13	9V x 1
LCS135H-N -□□	76	35	135	58	117	55.1	27.5	21.5	13	None
LCS135H-F4 -□□	76	35	135	58	117	55.1	27.5	21.5	13	AAA x 4
LCS135H-M2-□□	76	35	135	58	117	55.1	27.5	21.5	13	AA x 2
LCS135H-M3-□□	76	35	135	58	117	55.1	27.5	21.5	13	AA x 3
LCS135H-9V -□□	76	35	135	58	117	55.1	27.5	21.5	13	9V x 1
LCS145 -N -□□	96	27	145	75	124	71.1	19.5	14.5	12	None
LCS145 -F6 -□□	96	27	145	75	124	71.1	19.5	14.5	12	AAA x 6
LCS145 -M2-□□	96	27	145	75	124	71.1	19.5	14.5	12	AA x 2
LCS145 -M4-□□	96	27	145	75	124	71.1	19.5	14.5	12	AA x 4
LCS145H-N -□□	96	35	145	75	124	71.1	27.5	22.5	12	None
LCS145H-F6 -□□	96	35	145	75	124	71.1	27.5	22.5	12	AAA x 6
LCS145H-M2-□□	96	35	145	75	124	71.1	27.5	22.5	12	AA x 2
LCS145H-M4-□□	96	35	145	75	124	71.1	27.5	22.5	12	AA x 4
LCS165 -N -□□	80	27	165	62	147	59.1	19.5	13.5	13	None
LCS165 -M4-□□	80	27	165	62	147	59.1	19.5	13.5	13	AA x 4
LCS165H-N -□□	80	35	165	62	147	59.1	27.5	21.5	13	None
LCS165H-M4-□□	80	35	165	62	147	59.1	27.5	21.5	13	AA x 4

LC series HAND-HELD PLASTIC CASE

Technical Data
Protection class: IP40 Operating temperature: -10°C ~ +60°C

- Designed with beveled edges and rounded corners, and manufactured from flame-retardant ABS UL94V-0 material.
- Available in 9 different compartment types: AAx2, AAx3, AAx4, AAAx2, AAAx3, AAAx4, AAAx6, 9Vx1, and no battery compartment type.
- Positive (+) / negative (-) pole mark are incused within each battery compartment.
- Recommended to be used as measurement instruments, testing devices, wireless communication gadgets, medical equipment, and so on.

Battery compartment type

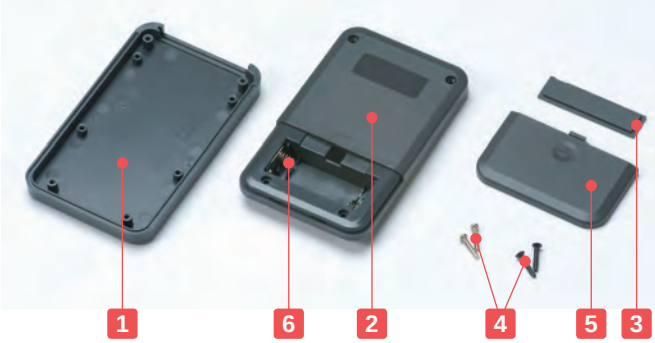

No battery compartment type

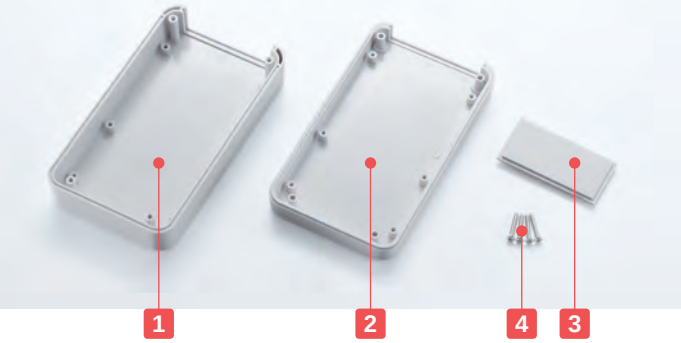

Components

No.	Part name	Pcs	Material	Color / Finish
1	Top cover	1	ABS UL94V-0	Off-white • Dark gray
2	Bottom cover	1	ABS UL94V-0	Off-white • Dark gray
3	Panel	1	ABS UL94V-0	Off-white • Dark gray
4	Self-tapping screw	4	Steel M2.6	Nickel plated • Black trivalent chromate
5	Battery cover	1	ABS UL94V-0	Off-white • Dark gray
6	Battery contact • Battery snap	1 set	Brass • Brass : PVC	Nickel plated

Accessories (Optional parts)

Tapping standoff TPS series
See page 122

PCB mounting screw EM-2.3
See page 123

Belt clip GDH series
See page 118

Key ring • Strap CR-20 • STP series
See page 96

Suspension bracket WM series
See page 116

Neodymium magnet NMG series
See page 117

LC dimensions

■ DXF/DWG/PDF/STP drawings available on our website.

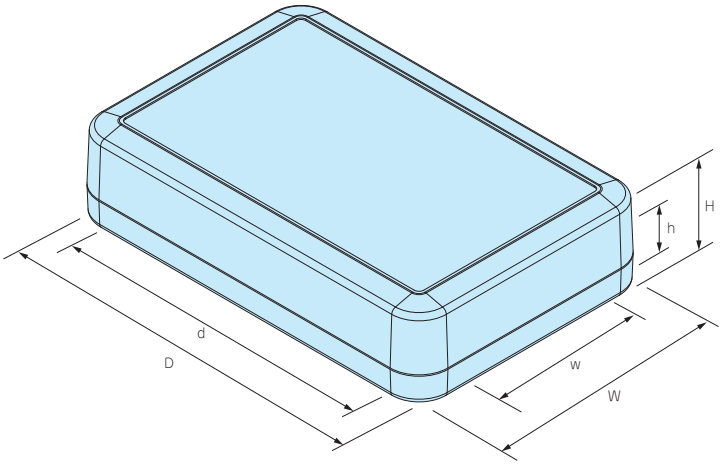

Battery Compartment Type

Type	N None	F2 AAAx2	F3 AAAx3	F4 AAAx4	F6 AAAx6	M2 AAx2	M3 AAx3	M4 AAx4	9V 9Vx1
Battery compartment	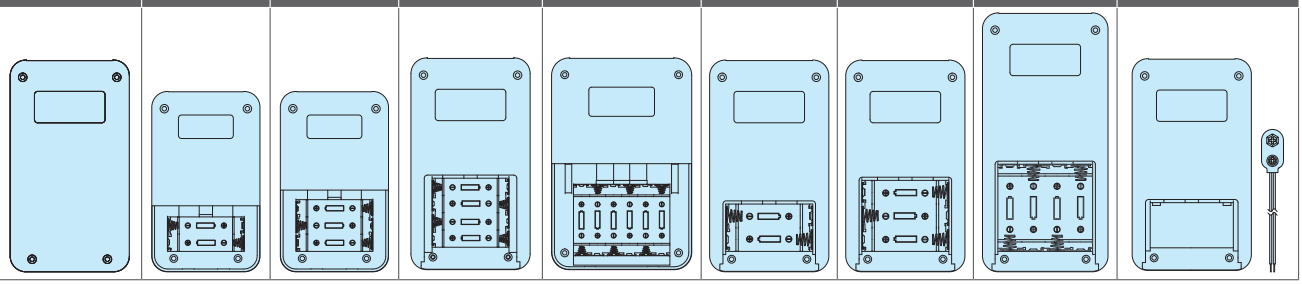								

Product no. / Dimensions

■ Please suffix color code at the end of the product number.

Product no.		External dimensions			Internal dimensions			Screw	Battery compartment	Weight (g)
● Dark gray	● Off-white	W	H	D	w	h	d			
LC115 -N -D	LC115 -N -W	69	19.5	115	61.5	9.5	86.5	M2.6-14 flat head x 4 pcs	None	70
LC115 -F2 -D	LC115 -F2 -W	69	19.5	115	61.5	9.5	63	M2.6-14 flat head x 2 pcs / M2.6-12 pan head x 2 pcs	AAA x 2	74.5
LC115 -F3 -D	LC115 -F3 -W	69	19.5	115	61.5	9.5	52	M2.6-14 flat head x 2 pcs / M2.6-12 pan head x 2 pcs	AAA x 3	76.5
LC115H -N -D	LC115H -N -W	69	28	115	60.9	18	86.5	M2.6-18 flat head x 4 pcs	None	80
LC115H -F2 -D	LC115H -F2 -W	69	28	115	60.9	18	63	M2.6-18 flat head x 2 pcs / M2.6-14 pan head x 2 pcs	AAA x 2	84.5
LC115H -F3 -D	LC115H -F3 -W	69	28	115	60.9	18	52	M2.6-18 flat head x 2 pcs / M2.6-14 pan head x 2 pcs	AAA x 3	86
LC115H -M2-D	LC115H -M2-W	69	28	115	60.9	18	54.8	M2.6-18 flat head x 2 pcs / M2.6-14 pan head x 2 pcs	AA x 2	88.5
LC115H -9V -D	LC115H -9V -W	69	28	115	60.9	18	55.7	M2.6-18 flat head x 2 pcs / M2.6-14 pan head x 2 pcs	9V x 1	88
LC135 -N -D	LC135 -N -W	76	27	135	68.2	16	107	M2.6-18 flat head x 4 pcs	None	95
LC135 -F4 -D	LC135 -F4 -W	76	27	135	68.2	16	59.2	M2.6-18 flat head x 2 pcs / M2.6-14 pan head x 2 pcs	AAA x 4	110
LC135 -M2-D	LC135 -M2-W	76	27	135	68.2	16	74.3	M2.6-18 flat head x 2 pcs / M2.6-14 pan head x 2 pcs	AA x 2	108
LC135 -M3-D	LC135 -M3-W	76	27	135	68.2	16	59.2	M2.6-18 flat head x 2 pcs / M2.6-14 pan head x 2 pcs	AA x 3	113.5
LC135 -9V -D	LC135 -9V -W	76	27	135	68.2	16	74.3	M2.6-18 flat head x 2 pcs / M2.6-14 pan head x 2 pcs	9V x 1	111.5
LC135H -N -D	LC135H -N -W	76	35	135	67.7	24	107	M2.6-18 flat head x 4 pcs	None	107.5
LC135H -F4 -D	LC135H -F4 -W	76	35	135	67.7	24	59.2	M2.6-18 flat head x 2 pcs / M2.6-14 pan head x 2 pcs	AAA x 4	122
LC135H -M2-D	LC135H -M2-W	76	35	135	67.7	24	74.3	M2.6-18 flat head x 2 pcs / M2.6-14 pan head x 2 pcs	AA x 2	121
LC135H -M3-D	LC135H -M3-W	76	35	135	67.7	24	59.2	M2.6-18 flat head x 2 pcs / M2.6-14 pan head x 2 pcs	AA x 3	126
LC135H -9V -D	LC135H -9V -W	76	35	135	67.7	24	74.3	M2.6-18 flat head x 2 pcs / M2.6-14 pan head x 2 pcs	9V x 1	123.5
LC145S -N -D	LC145S -N -W	96	20	145	87.9	9.5	112.9	M2.6-14 flat head x 4 pcs	None	110
LC145S -F6 -D	LC145S -F6 -W	96	20	145	88.1	9.2	67.8	M2.6-14 flat head x 2 pcs / M2.6-12 pan head x 2 pcs	AAA x 6	130
LC145 -N -D	LC145 -N -W	96	27	145	87.8	16.5	112.9	M2.6-18 flat head x 4 pcs	None	121
LC145 -F6 -D	LC145 -F6 -W	96	27	145	87.8	16.5	67.8	M2.6-18 flat head x 2 pcs / M2.6-14 pan head x 2 pcs	AAA x 6	141
LC145 -M2-D	LC145 -M2-W	96	27	145	87.8	16.5	86.8	M2.6-18 flat head x 2 pcs / M2.6-14 pan head x 2 pcs	AA x 2	135
LC145 -M4-D	LC145 -M4-W	96	27	145	87.8	16.5	63.4	M2.6-18 flat head x 2 pcs / M2.6-14 pan head x 2 pcs	AA x 4	142
LC145H -N -D	LC145H -N -W	96	35	145	87.2	24.5	112.9	M2.6-18 flat head x 4 pcs	None	135
LC145H -F6 -D	LC145H -F6 -W	96	35	145	87.2	24.5	67.8	M2.6-18 flat head x 2 pcs / M2.6-14 pan head x 2 pcs	AAA x 6	155.5
LC145H -M2-D	LC145H -M2-W	96	35	145	87.2	24.5	86.8	M2.6-18 flat head x 2 pcs / M2.6-14 pan head x 2 pcs	AA x 2	149
LC145H -M4-D	LC145H -M4-W	96	35	145	87.2	24.5	63.4	M2.6-18 flat head x 2 pcs / M2.6-14 pan head x 2 pcs	AA x 4	156
LC165 -N -D	LC165 -N -W	80	27	165	72.2	16	137	M2.6-18 flat head x 4 pcs	None	120.5
LC165 -M4-D	LC165 -M4-W	80	27	165	72.2	16	79	M2.6-18 flat head x 2 pcs / M2.6-14 pan head x 2 pcs	AA x 4	140
LC165H -N -D	LC165H -N -W	80	35	165	71.7	24	137	M2.6-18 flat head x 4 pcs	None	134.5
LC165H -M4-D	LC165H -M4-W	80	35	165	71.7	24	79	M2.6-18 flat head x 2 pcs / M2.6-14 pan head x 2 pcs	AA x 4	153.5

LCE series EMC SHIELDED HAND-HELD PLASTIC CASE

EMC Shielding Effects

Technical Data
Protection class: IP40 Operating temperature: -10°C ~ +60°C

- LCE series is an EMC shielded version of LC hand-held plastic case coated internally with DOTITE conductive paint (acrylic paint mixed with nickel filler).
- Designed with beveled edges and rounded corners, and manufactured from flame-resistant ABS UL94V-0 material.
- Recommended to be used as measurement instruments, testing devices, wireless communication gadgets, medical equipment, and so on.

Components

No.	Part name	Pcs	Material	Color / Finish	Conductive paint
1	Top cover	1	ABS UL94V-0	Dark gray	DOTITE
2	Bottom cover	1	ABS UL94V-0	Dark gray	DOTITE
3	Panel	1	ABS UL94V-0	Dark gray	DOTITE
4	Self-tapping screw	4	Steel M2.6	Black trivalent chromate	–

Accessories (Optional parts)

Silicone cover LCTP • LCSC series
See page 79 ~ 80

Tapping standoff TPS series
See page 122

PCB mounting screw EM-2.3
See page 123

TORX screw MR series
See page 123

Suspension bracket WM series
See page 116

LCE dimensions

■ DXF/DWG/PDF/STP drawings available on our website.

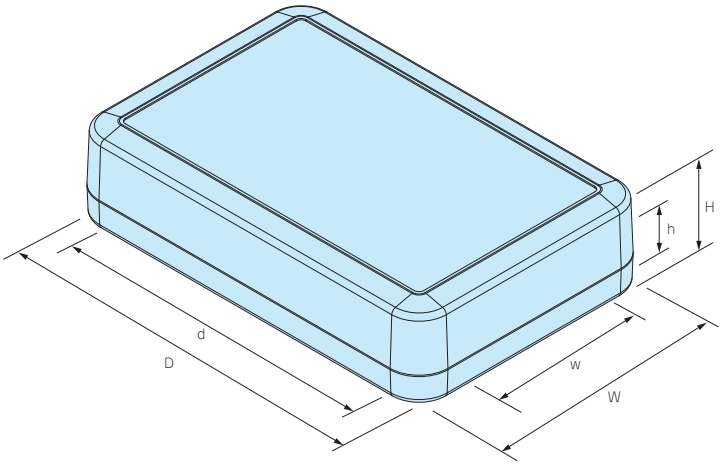

Product no. / Dimensions

Product no.	External dimensions			Internal dimensions			Screw	Weight (g)
	W	H	D	w	h	d		
LCE115 -N -D	69	19.5	115	61.5	9.5	86.5	M2.6-18 flat head x 4 pcs	72.5
LCE115H -N -D	69	28	115	60.9	18	86.5	M2.6-18 flat head x 4 pcs	84
LCE135 -N -D	76	27	135	68.2	16	107	M2.6-18 flat head x 4 pcs	97
LCE145H -N -D	96	35	145	87.2	24.5	112.9	M2.6-18 flat head x 4 pcs	137
LCE165H -N -D	80	35	165	71.7	24	137	M2.6-18 flat head x 4 pcs	139

CONDUCTIVE PAINT CUSTOMIZATION AVAILABLE for LC series.

The LCE series are a selected few models of the LC series, customized with conductive paint.
Other LC series enclosures not listed can also be customized with conductive paint.

Contact us for more details.
E-mail : sales@takachi-el.co.jp

LCTP series SHOCKPROOF SILICONE COVER for LC • LCE

Color Type

Code	O Orange	G Green	N Navy	D Dark gray
Color				

- Shock-proof silicone cover for LC and LCE series.
- Custom color is available from just 1 pc. For 500 pcs or more, manufacture costs will be similar to a standard color. Please inquire for more details. For custom color order, please specify **PANTONE**® color code.

LCTP dimensions

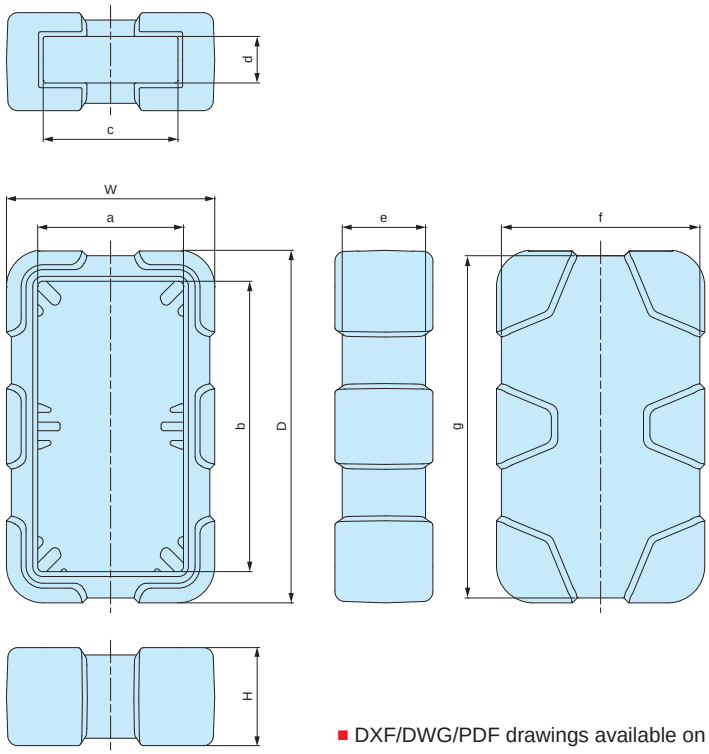

APPLICATION EXAMPLE

Ultrasonic Hardness Tester
Product by NOVOTEST (Ukraine)

- DXF/DWG/PDF drawings available on our website.

Components

Part name	Material	Color
Silicone cover	Silicone	Orange • Green • Navy • Dark gray

Product no. / Dimensions

- Please suffix color code at the end of the product number.

Product no.	W	H	D	a	b	c	d	e	f	g	Suitable models	Weight (g)
LCTP115 -□	76	28	121.9	55.5	101.5	48.3	12	24	72	117.8	LC • LCE115	53.5
LCTP115H -□	76	36.5	121.9	55.5	101.5	48.3	20.5	32.5	72	117.8	LC • LCE115H	61
LCTP135 -□	85	40	143.9	59.5	118.5	55	19	34	81	139.7	LC • LCE135	115.5
LCTP135H -□	85	48	143.9	59.5	118.5	55	27	42	81	139.6	LC135H	124
LCTP145 -□	105	40	153.9	76.5	125.5	71	19	34	101	149.7	LC145	137.5
LCTP145H -□	105	48	153.9	76.5	125.5	71	27	42	101	149.7	LC • LCE145H	147
LCTP165 -□	89	40	173.9	63.5	148.5	59	19	34	85	169.7	LC165	143
LCTP165H -□	89	48	173.9	63.5	148.5	59	27	42	85	169.6	LC • LCE165H	151.5

LCSC series SILICONE COVER for LC • LCE

Color Type

Code	R Red	G Green	B Blue	D Dark gray	L Light gray
Color					

- Silicone cover for LC and LCE series.
- Custom color is available from just 1 pc. For 500pcs or more, manufacture costs will be similar to a standard color. Please inquire for more details. For custom color order, please specify **PANTONE**® color code.

LCSC dimensions

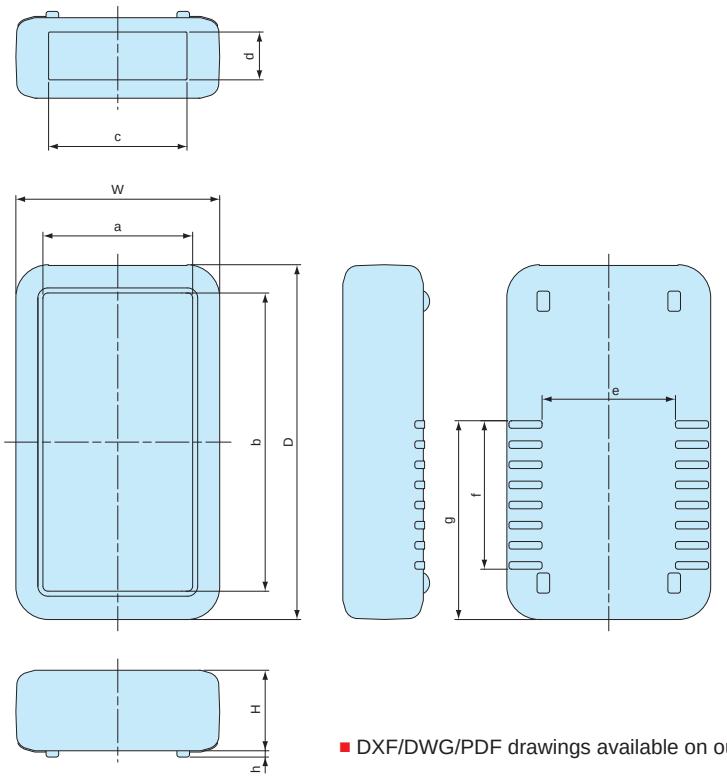

APPLICATION EXAMPLE

Temperature Surveillance Sensor

Product by SENFIO (Brazil)

- DXF/DWG/PDF drawings available on our website.

Components

Part name	Material	Color
Silicone cover	Silicone	Red • Green • Blue • Light gray • Dark gray

Product no. / Dimensions

- Please suffix color code at the end of the product number.

Product no.	W	H	D	a	b	c	d	e	f	g	h	Suitable models	Weight (g)
LCSC115 -☐	74	24	120	55.5	101.5	48.3	12	46	44.5	60.5	2	LC • LCE115	43
LCSC115H-☐	74	32.5	120	55.5	101.5	48.3	20.5	46	44.5	60.5	2	LC • LCE115H	50
LCSC135 -☐	81	32	141	59.5	118.5	55	19	53	59	79	2.5	LC • LCE135	70
LCSC135H-☐	81	40	141	59.5	118.5	55	27	53	59	79	2.5	LC135H	75.5
LCSC145 -☐	101	32	151	76.5	125.5	71	19	71	59	81	2.5	LC145	81
LCSC145H-☐	101	40	151	76.5	125.5	71	27	71	59	81	2.5	LC • LCE145H	89
LCSC165 -☐	85	32	171	63.5	148.5	59	19	53	67	92	2.5	LC165	82.5
LCSC165H-☐	85	40	171	63.5	148.5	59	27	53	67	92	2.5	LC • LCE165H	86

TAKACHI

CSS·CS series

Slim designed small type handheld enclosures
with built-in coin cell battery compartment.
Suitable for IOT device, Remote controller, Portable GPS,
Wireless key-fob, RFID tag, small device, and so on.
4 different sizes with 10 color variations each are available.

•Built-in battery compartment

NEW SIZE

for CR2450/CR2477

Black | Light gray | Orange | Green | Cyan

APPLICATION EXAMPLE

Motor Sport Infrared Laptimer (Bluetooth 4.0 & Android Application)

Product by General Mechatronics (Hungary)

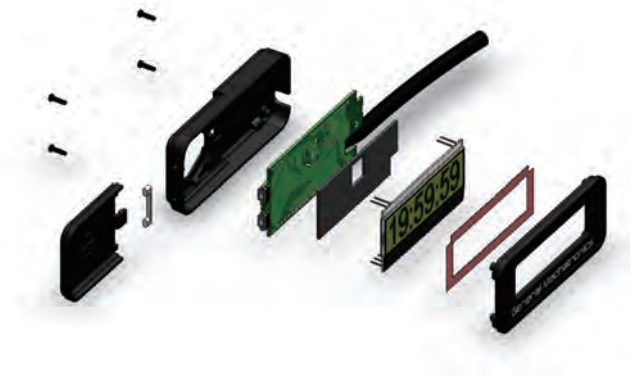

Bluetooth Temperature Data Logger

Product by Almendo Technologies (Germany)

Impact Detection Sensor for Relay Tester

Product by MUSASHI INTECH (Japan)

Wireless Remote Control Switch

Product by HERUTU ELECTRONICS (Japan)

Handi Quilter Easy-Set Tension™ Kit

Product by Handi Quilter (USA)

Wireless Microphone for Hearing Aid

Product by Audinor (Norway)

USB Noise Remover

Product by SPEC (Japan)

High Frequency Preamplifier

Product by NATEC (Japan)

Indoor Environment Sensor

Product by Bunnyhop (Japan)

Detection Sensor for Wandering Behavior

Product by Tecnos Japan (Japan)

Serial EEPROM Programmers

Product by SolitonWave (Japan)

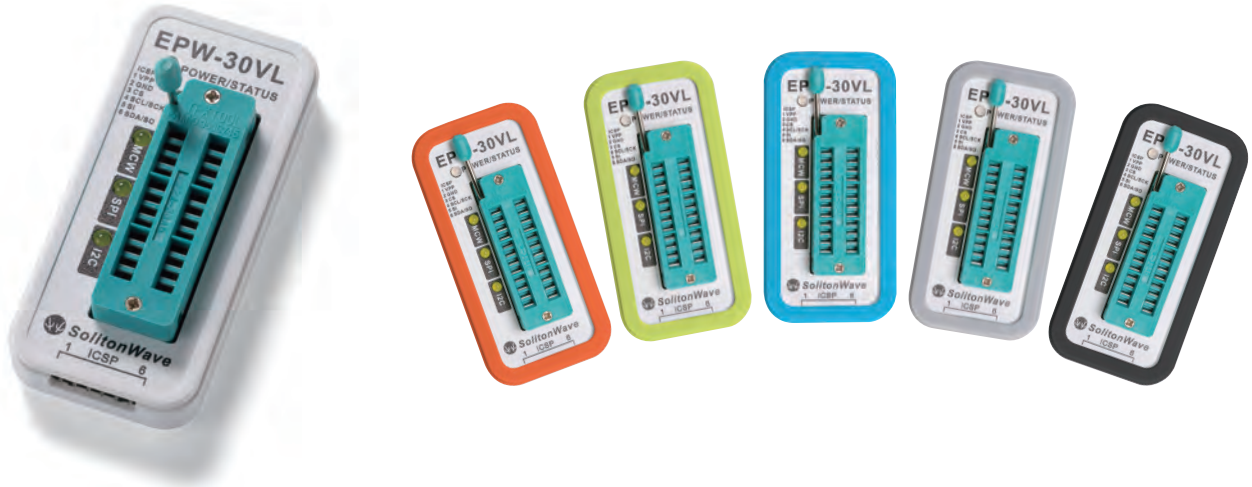

RFID Reader

Product by e-Tech (Japan)

HoneyBee Proximity Switch

Product by ADAPTIVATION (USA)

Restroom Monitoring System

Product by KYOHRITSU ELECTRONIC INDUSTRY (Japan)

HID RFID Reader/Writer

Product by ART Finex (Japan)

Dual-frequency GNSS Receiver

Product by CORE (Japan)

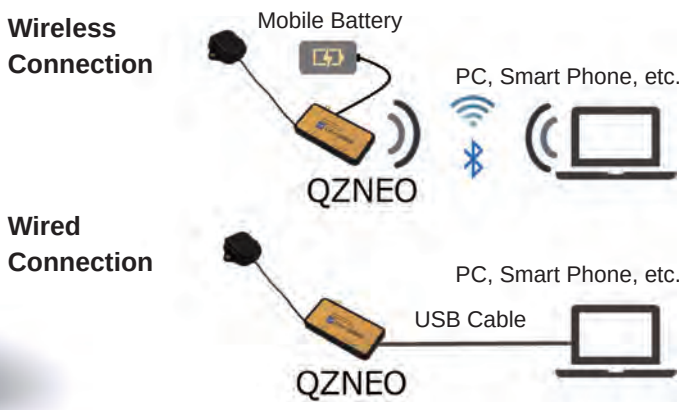

CSS series PORTABLE PLASTIC CASE with SILICONE COVER

NEW SIZE

- Small plastic case with silicone cover. Strong against drop impact while providing a secure grip.
- New CSS100 models compatible with CR2450/CR2477 batteries now available.
- Select proper models by enclosure dimensions and capacity of the batteries.
  Typical Capacity : CR2032 : 225mAh / CR2450 : 620mAh / CR2477 : 1000mAh
- Suitable for remote controller, wireless key fob, small tester/device and so on.
- Available in 4 sizes with 16 models and selectable in 10 different color combinations.
- 2 types of silicone cover available with (Open) and without (Closed) rectangular cutout on the top side.

Technical Data
Protection class: IP40 Operating temperature: -10°C ~ +60°C

No battery compartment type

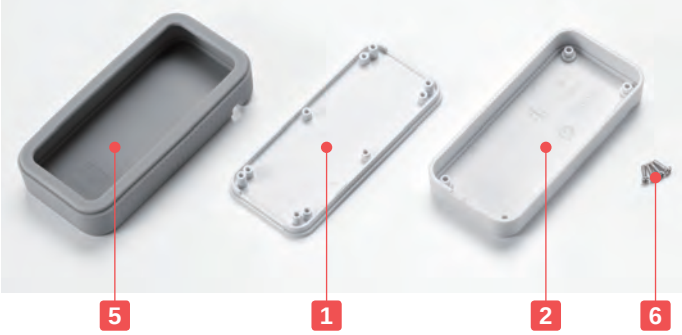

Battery compartment type

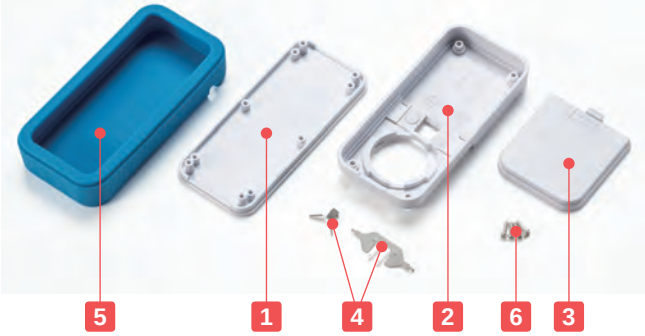

Components

No.	Part name	Pcs	Material	Color / Finish
1	Top cover	1	ABS UL94HB	White • Black
2	Bottom cover	1	ABS UL94HB	White • Black
3	Battery cover	1	ABS UL94HB	White • Black
4	Battery contact	1 set / 2 sets (CSS115)	Stainless steel SUS304	Nickel plated
5	Silicone cover	1	Silicone	Orange • Green • Cyan • Light gray • Black
6	Self-tapping screw	4	Steel M1.6-6	Nickel plated • Black trivalent chromate

Accessories (Optional parts)

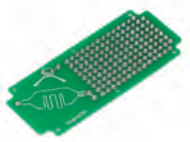

Exclusive PCB CSPB series
See page 90

Strap STPS series
See page 95

PCB mounting screw EM-1.6
See page 123

TORX screw MR1.6-6S
See page 123

Silicone Cover Type

Code	CL Closed	OP Open
Shape		

Color Type

Code	BO Black / Orange	BG Black / Green	BC Black / Cyan	BL Black / Light gray	BB Black / Black
Color					
Code	**WO White / Orange**	**WG White / Green**	**WC White / Cyan**	**WL White / Light gray**	**WB White / Black**
Color					

CSS dimensions

■ DXF/DWG/PDF/STP drawings available on our website.

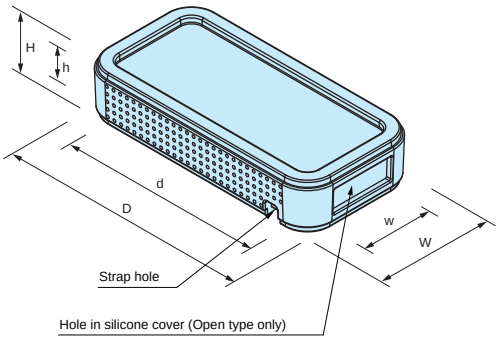

Type	CSS N Type	CSS75/90	NEW CSS100 *1	CSS115
Battery compartment	None	CR2032 × 1	CR2450 × 1 or CR2477 *2 × 1	CR2032 × 2
	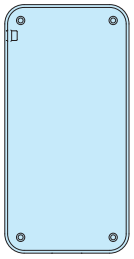	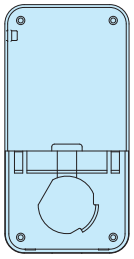	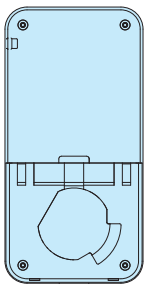	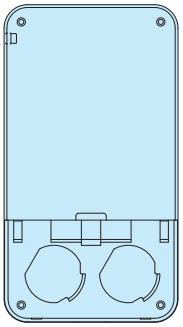

*1 CSS100 battery type varies by PCB placement: CR2450 with PCB on bottom cover, or CR2477 with PCB on top cover. See page CS-2 for the details.
*2 Not compatible with Renata CR2477N battery.

Product no. / Dimensions

■ Please suffix color code at the end of the product number.

Product no.	External dimensions			Internal dimensions			Battery compartment	Weight (g)
	W	H	D	w	h	d		
CSS 75N -CL -□□	38.6 (35)	15.5 (12)	78.6 (75)	26.6	5.3	59	None	24
CSS 75N -OP-□□	38.6 (35)	15.5 (12)	78.6 (75)	26.6	5.3	59	None	24
CSS 75 -CL -□□	38.6 (35)	15.5 (12)	78.6 (75)	26.6	5.3	25.4	CR2032×1	25
CSS 75 -OP-□□	38.6 (35)	15.5 (12)	78.6 (75)	26.6	5.3	25.4	CR2032×1	25
CSS 90N -CL -□□	48.6 (45)	15.5 (12)	93.6 (90)	36.6	5.3	74	None	36
CSS 90N -OP-□□	48.6 (45)	15.5 (12)	93.6 (90)	36.6	5.3	74	None	35
CSS 90 -CL -□□	48.6 (45)	15.5 (12)	93.6 (90)	36.6	5.3	40.4	CR2032×1	38
CSS 90 -OP-□□	48.6 (45)	15.5 (12)	93.6 (90)	36.6	5.3	40.4	CR2032×1	37
NEW CSS100N -CL -□□	54.1 (50)	20.8 (16.8)	104.1 (100)	41.6	10.1	82	None	52
NEW CSS100N -OP-□□	54.1 (50)	20.8 (16.8)	104.1 (100)	41.6	10.1	82	None	51
NEW CSS100 -CL -□□	54.1 (50)	20.8 (16.8)	104.1 (100)	44.1	6.8	46	CR2450×1 / CR2477×1	54
NEW CSS100 -OP-□□	54.1 (50)	20.8 (16.8)	104.1 (100)	44.1	6.8	46	CR2450×1 / CR2477×1	53
CSS115N -CL -□□	67.1 (63)	16 (12)	119.1 (115)	54.6	5.3	98	None	62
CSS115N -OP-□□	67.1 (63)	16 (12)	119.1 (115)	54.6	5.3	98	None	61
CSS115 -CL -□□	67.1 (63)	16 (12)	119.1 (115)	54.6	5.3	64.9	CR2032×2	65
CSS115 -OP-□□	67.1 (63)	16 (12)	119.1 (115)	54.6	5.3	64.9	CR2032×2	64

■ ( ) value = enclosure dimension.

CS series PORTABLE PLASTIC CASE

NEW SIZE

- New CS100 model compatible with CR2450/CR2477 batteries is now available.
- Easy replacement of batteries. Battery contact included in each case (except for N type).
- Select proper models by enclosure dimensions and capacity of the batteries.
  Typical Capacity : CR2032 : 225mAh / CR2450 : 620mAh / CR2477 : 1000mAh
- Suitable for remote controller, wireless key fob, or small tester/device, and so on.
- Available in 4 sizes with 8 models and selectable in 2 different color types (Black or White).

Technical Data
Protection class: IP40 Operating temperature: -10°C ~ +60°C

No battery compartment type

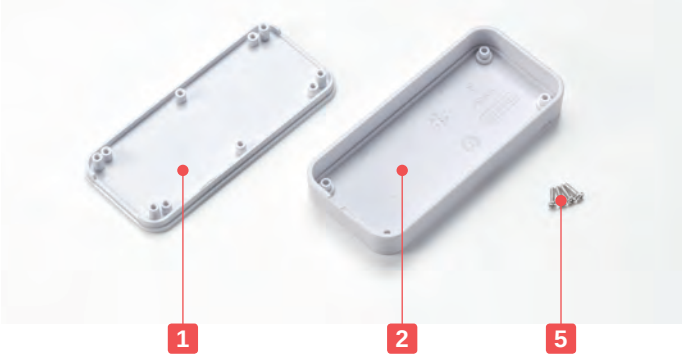

Battery compartment type

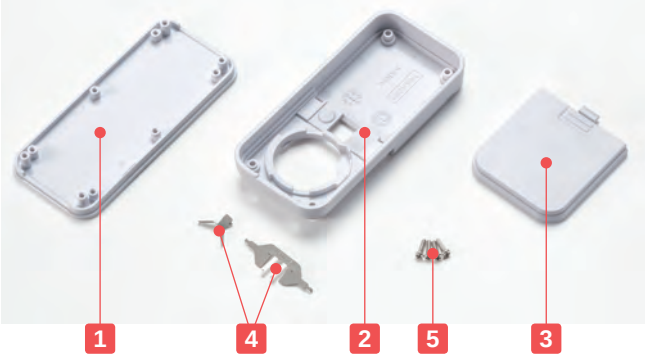

Components

No.	Part name	Pcs	Material	Color / Finish
1	Top cover	1	ABS UL94HB	White • Black
2	Bottom cover	1	ABS UL94HB	White • Black
3	Battery cover	1	ABS UL94HB	White • Black
4	Battery contact	1 set / 2 sets (CS115)	Stainless steel SUS304	Nickel plated
5	Self-tapping screw	4	Steel M1.6-6	Nickel plated • Black trivalent chromate

Accessories (Optional parts)

Exclusive PCB CSPB series
See page 90

Strap STPS series
See page 95

PCB mounting screw EM-1.6
See page 123

TORX screw MR1.6-6S
See page 123

Coin Battery Contact Installation Steps

Soldering the contacts on PCB

Installing PCB on top cover

All set

■ Exclusive PCB is available as an optional part. See page CSPB-1 for more details.Refer to drawings on page CSPB-1 for suitable PCB dimensions and screw hole layout.

CS dimensions

■ DXF/DWG/PDF/STP drawings available on our website.

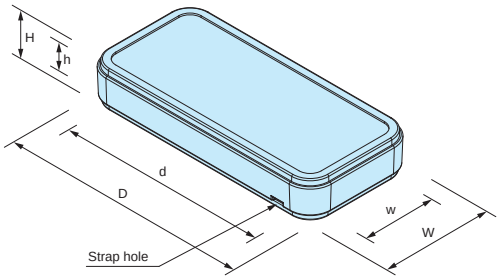

Type	CS N Type	CS75/90	NEW CS100 *1	CS115
Battery compartment	None	CR2032 × 1	CR2450 × 1 or CR2477 *2 × 1	CR2032 × 2

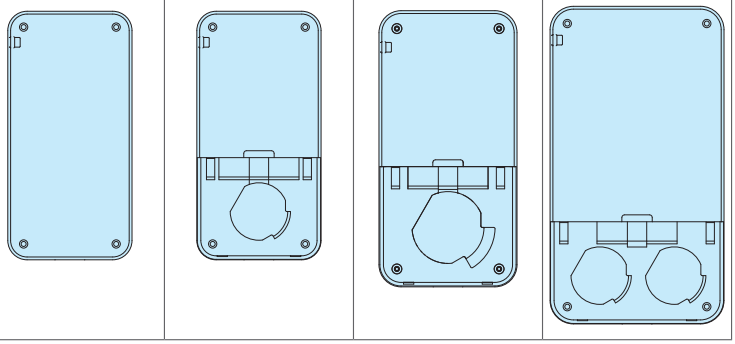

*1 CS100 battery type varies by PCB placement: CR2450 with PCB on bottom cover, or CR2477 with PCB on top cover. See below for the details.
*2 Not compatible with Renata CR2477N battery.

CR2450 × 1 on CS100 (PCB on bottom cover)

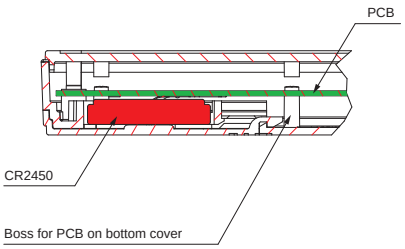

CR2477 x 1 on CS100 (PCB on top cover)

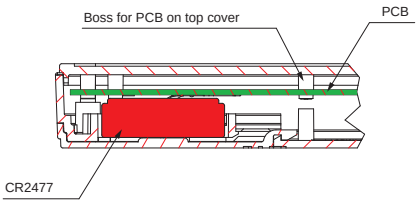

*Not compatible with Renata CR2477N battery

Product no. / Dimensions

Product no.		External dimensions			Internal dimensions			Battery compartment	Weight (g)
● Black	● White	W	H	D	w	h	d		
CS 75N-B	CS 75N-W	35	12	75	26.6	5.3	59	None	12
CS 75 -B	CS 75 -W	35	12	75	26.6	5.3	25.4	CR2032×1	13
CS 90N-B	CS 90N-W	45	12	90	36.6	5.3	74	None	18
CS 90 -B	CS 90 -W	45	12	90	36.6	5.3	40.4	CR2032×1	20
NEW CS100N-B	NEW CS100N-W	50	16.8	100	41.6	10.1	82	None	24
NEW CS100 -B	NEW CS100 -W	50	16.8	100	44.1	6.8	46	CR2450×1 / CR2477×1	26
CS115N-B	CS115N-W	63	12	115	54.6	5.3	98	None	30
CS115 -B	CS115 -W	63	12	115	54.6	5.3	64.9	CR2032×2	33

CSSC series SILICONE COVER for CS

NEW SIZE

Silicone Cover Type

Code	CL Closed	OP Open
Shape		

- 2 types of silicone cover which have with (Open) and without (Closed) rectangular cutout on the front side; selectable in 5 different colors.
- Custom color is available from just 1 pc. For 500 pcs or more, manufacture costs will be similar to a standard color. Please inquire for more details. For custom color order, please specify **PANTONE**® color code.

Color Type

Code	O Orange	G Green	C Cyan	L Light gray	B Black
Color					

CSSC dimensions

- DXF/DWG/PDF drawings available on our website.

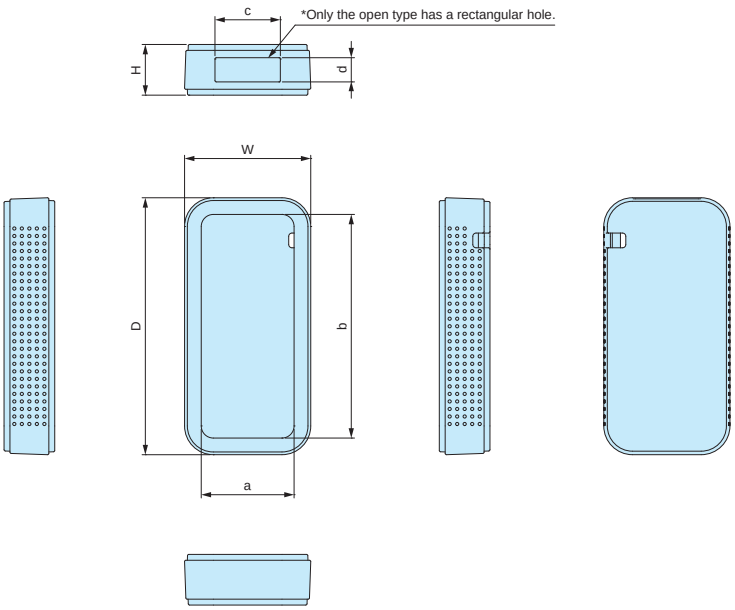

Components

Part name	Material	Color
Silicone cover	Silicone	Orange • Green • Cyan • Light gray • Black

Product no. / Dimensions

- Please suffix color code at the end of the product number.

Product no.	W	H	D	a	b	c	d	Suitable models	Weight (g)
CSSC 75-CL-□	38.6	15.5	78.6	28.4	68.4	–	–	CS 75	12
CSSC 75-OP-□	38.6	15.5	78.6	28.4	68.4	20	7.4	CS 75	12
CSSC 90-CL-□	48.6	15.5	93.6	37.4	82.4	–	–	CS 90	18
CSSC 90-OP-□	48.6	15.5	93.6	37.4	82.4	30	7.4	CS 90	17
NEW CSSC100-CL-□	54.1	20.8	104.1	42.4	92.4	–	–	CS100	28
NEW CSSC100-OP-□	54.1	20.8	104.1	42.4	92.4	33	12.2	CS100	27
CSSC115-CL-□	67.1	16	119.1	55.4	107.4	–	–	CS115	32
CSSC115-OP-□	67.1	16	119.1	55.4	107.4	45	7.4	CS115	31

CSPB series EXCLUSIVE PCB for CS • CSS

NEW SIZE

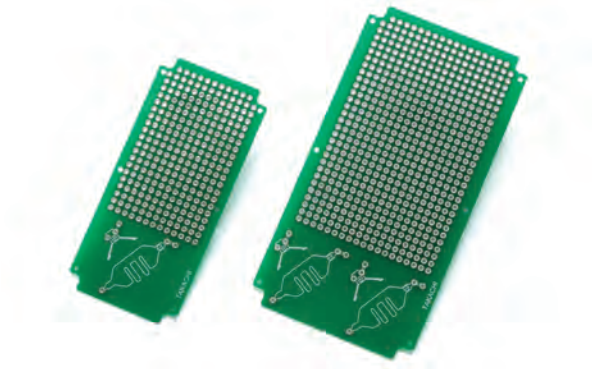

- Exclusive PCB for CS and CSS series.
- Glass epoxy board (FR-4), through-hole on both sides and 2.54mm hole distance.
- Prefabricated holes for battery contact use with CS • CSS case. The contact directions are printed on the PCB.

Soldering the battery contacts (included with each case) onto the PCB

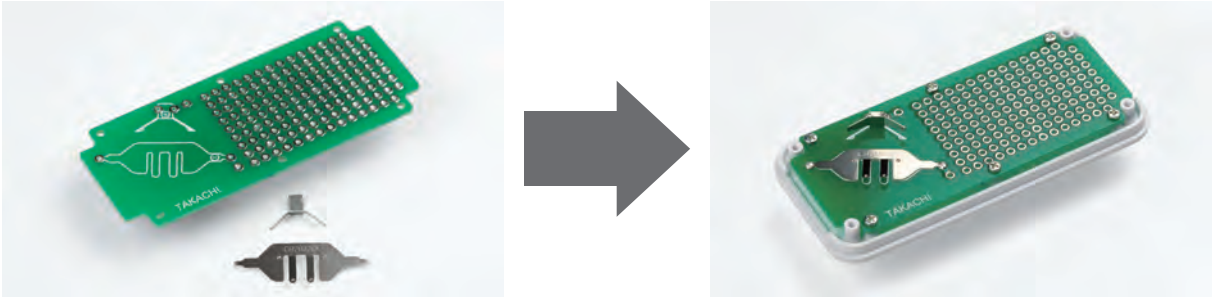

Components

Part name	Pcs	Material	Color / Finish
PCB	1	Glass epoxy (FR-4) t=1.0	Through-hole • Lead-free solder • Solder resist
Self-tapping screw	6	Steel M1.6	Trivalent chromate

CSPB dimensions

- DXF/DWG/PDF drawings available on our website.

CSPB-75 • 90 • 100

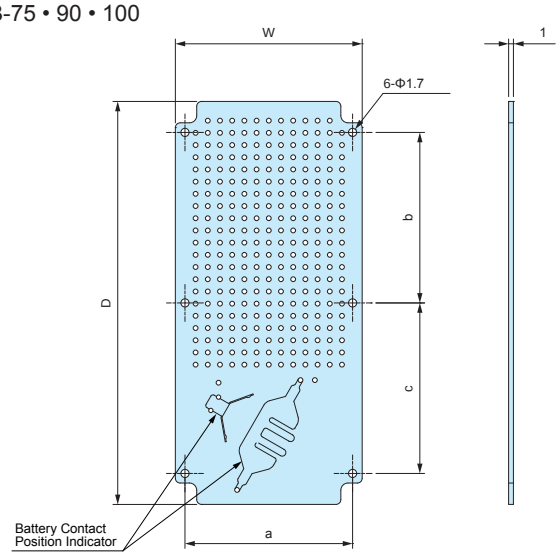

CSPB-115

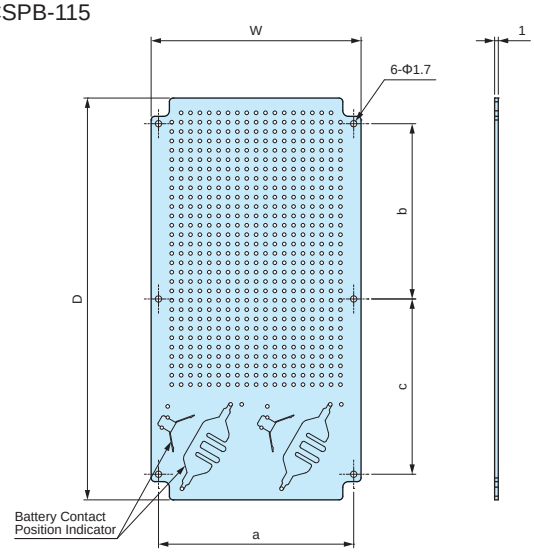

Note : Holes (6-Φ1.7) for PCB mount bosses are un-soldered.

Product no. / Dimensions

Product no.	W	D	a	b	c	Suitable models
CSPB- 75	28.9	68.9	24.9	28	28	CSS 75 • CS 75
CSPB- 90	38.9	83.9	34.9	35.5	35.5	CSS 90 • CS 90
NEW CSPB-100	45	94	38	31	38	CSS100 • CS100
CSPB-115	56.9	108.9	52.9	47.5	47.5	CSS115 • CS115

PS series PORTABLE PLASTIC CASE

Suitable for wireless device, remote controller, key fob, and so on.
Available in 4 different sizes with 5 selectable colors.

Portable SIGFOX Multi-Sensor System

Product by Axible Technologies (France)

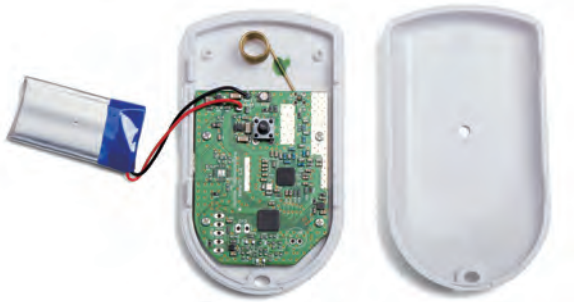

Multi-sensor system which detects motion, temperature, humidity and sound. Warnings are sent to the owner, or 3rd parties via SMS, Twitter or Facebook when events such as a home invasion, or when a fire occurs.

SIGFOX is:

A French company that builds wireless ultra-narrow band (UNB) networks, for the connection of low-energy consumption devices such as electricity meters, smart-watches, and washing machines, which needs to be continuously on and emitting small amounts of data. This wireless network technology, which is aimed at the Internet of Things (IoT), is starting to gain popularity and rolling out in the fields such as housing, automobiles, transportation and logistics, smart city connectivity, healthcare, and so on.

GPS Tracker Tag (via SIGFOX Network)

Product by HidnSeek (France)

Example: Locating your car in a large parking area

APPLICATION EXAMPLE

Remote Controller for Undercover Investigation

Product by CopTech (Germany)

Re-Mote Suite-IoT Development Platform

Product by Zolertia (Spain)

Beacon Receiver

Product by GP Shopper (USA)

GPS Tracker with Temperature Data Logger

Product by HidnSeek (France)

Portable Radiation Detector

Product by Yamagata Kyodo (Japan)

Remote Controller for Metal Sensor Reel

Product by HATAYA (Japan)

LPWA Receiver

PS series PORTABLE PLASTIC CASE

Technical Data
Protection class: IP40 Operating temperature: -10°C ~ +60°C

- Simple snap-in case without screws.
- Comfortable shape and hold.
- 5 different colors are available for selection.
- Suitable for use as a wireless device, remote control, key fob etc.
- Designed with an easily accessible hole for strap attachment.

Components

No.	Part name	Material	Color / Finish
1	Rounded cover	ABS UL94HB	White • Black • Cobalt • Green • Pink
2	Flat cover	ABS UL94HB	White • Black • Cobalt • Green • Pink

Product no. / Dimensions

Product no.					Dimensions			Weight (g)
● White	● Black	● Cobalt	● Green	○ Pink	W	H	D	
PS- 50W	PS- 50B	PS- 50C	PS- 50G	PS- 50P	50	14	50	9
PS- 65W	PS- 65B	PS- 65C	PS- 65G	PS- 65P	35	11	65	9
PS- 85W	PS- 85B	PS- 85C	PS- 85G	PS- 85P	48	15	85	20
PS-100W	PS-100B	PS-100C	PS-100G	PS-100P	58	18	100	27

Accessories (Optional parts)

PCB mounting screw EM-1.6
See page 123

Strap STPS series
See page 95

Neodymium magnet NMG series
See page 116

PS dimensions

■ DXF/DWG/PDF/STP drawings available on our website.

PS-50□

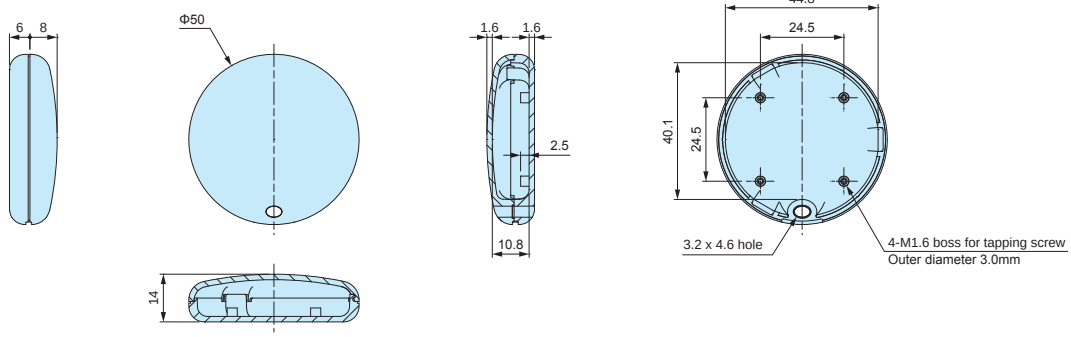

PS-65□

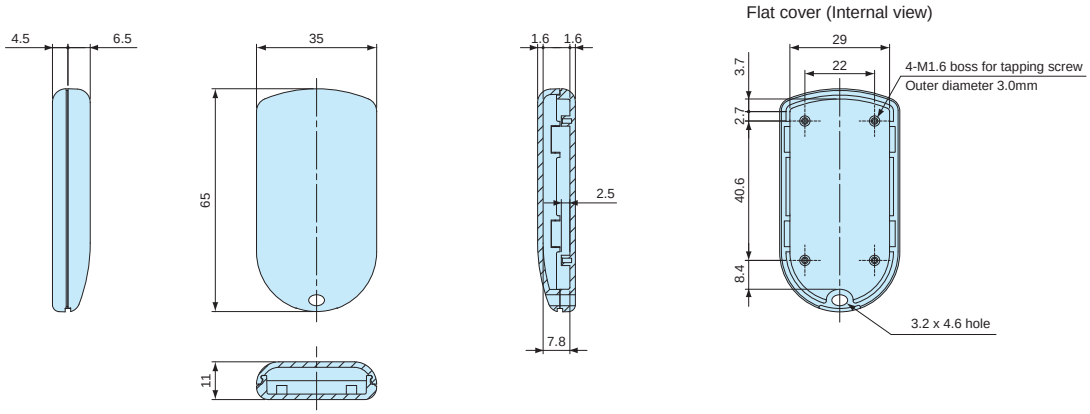

PS-85□ / PS-100□

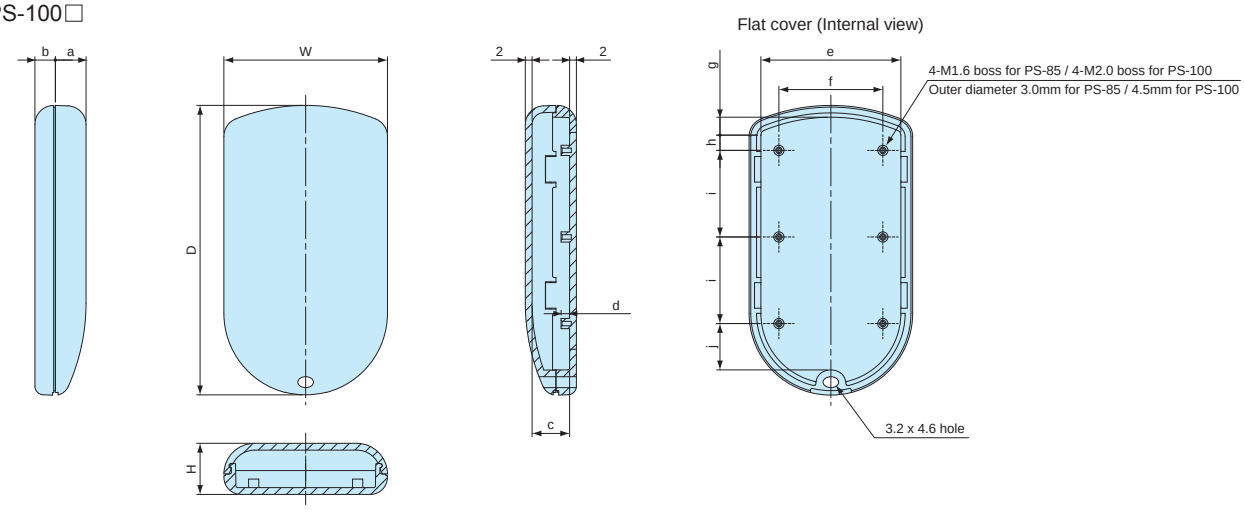

Product no.	W	H	D	a	b	c	d	e	f	g	h	i	j
PS- 85□	48	11	85	9	6	11	2.5	41.1	33	5.3	4.5	25.4	13.6
PS-100□	58	18	100	11.5	6.5	14	4	51.2	40	6.4	4.2	29	20.4

Application example (RFID Tag)

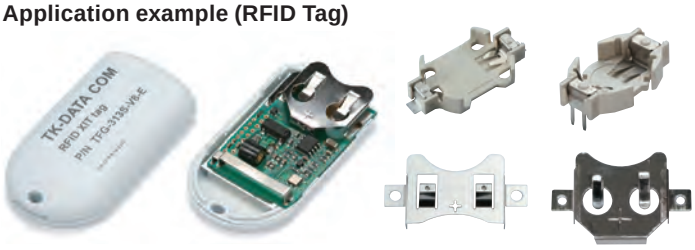

■ Various coin cell battery holders can be utilized.
See coin cell battery holders on our website for more details.
Refer to the chart for compatible holders.

■ Chart on the right is based upon mounting onto a 1.0mm thick PCB.

■ Please note that depending on the mounting location, PCB may not be able to be properly affixed on.

COMPATIBLE COIN CELL BATTERY HOLDERS CHART

Product no.	Compatible coin cell battery holders
PS- 50□	SMTU1220(G) / 1225 / 1362(G) / 2-2016 / 2032(G) PB-621 / SMTM1632 / 2032 BK-879 / 5091 / 5067 / 888
PS- 65□	BK-879 / 5091 / 5067 / 888 PB621 / SMTM1225 / 1632 / 2032
PS- 85□	PB621 / SMTM1632 / 2032 BK-879 / 5091 / 5067 / 888 SMTU1220(G) / 1225 / 1632(G) / 2-2016 / 2032(G) / 2430
PS-100□	PB621 / SMTM1632 / 2032 BK-879 / 5091 / 5067 / 888 SMTU1220(G) / 1225 / 1632(G) / 2-2016 / 2032(G) / 2430 / 2450 BCR20H4 / BCR20H5

STPS series STRAP

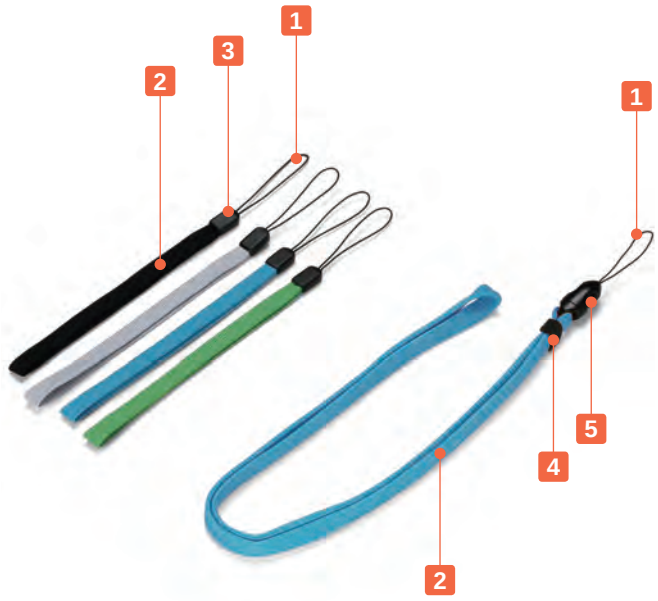

APPLICATION EXAMPLE

Wrist strap (STPS-140G)

Neck strap (STPS-450C)

- Colorful and sturdy straps best used with CSS, CS and PS series.
- Wrist and Neck straps are available in 4 unique colors.
- Neck strap comes with a quick-release joint, making removal or attachment quick and easy.

Quick-release joint
(Neck strap only)

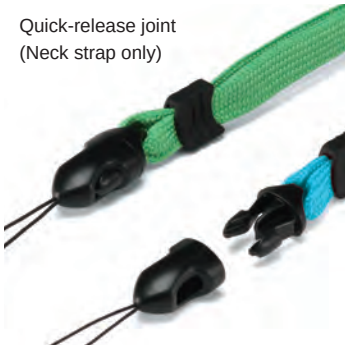

Color Type

Code	G Green	C Cyan	L Light gray	B Black
Color				

Components

No.	Part name	Material	Color
1	String	Polyester	Black
2	Strap	Polyester	Green • Cyan • Light gray • Black
3	Cap (wrist strap only)	Nylon	Black
4	Clamp (neck strap only)	Elastomer	Black
5	Joint (neck strap only)	Polyacetal	Black

Product no. / Dimensions

Product no.				Strap width	Strap length
Green	Cyan	Light gray	Black		
STPS-140G	STPS-140C	STPS-140L	STPS-140B	8	140
STPS-450G	STPS-450C	STPS-450L	STPS-450B	10	450

STP series STRAP

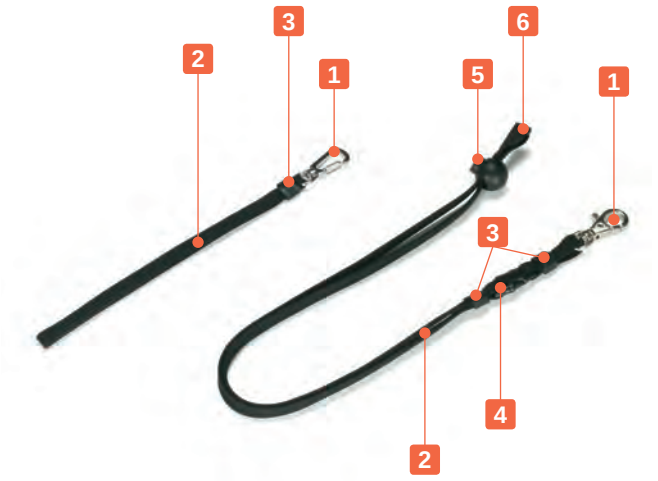

Wrist strap (STP-200)

Neck strap (STP-450)

- Strap with a metal hook
- Recommended to be used with CR key ring.

Neck strap detail

Quick-release joint

Adjuster

- Only the neck strap has a joint and an adjuster.

Components

No.	Part name	Pcs	Material	Color / Finish
1	Metal hook	1	Diecast zinc & steel	Nickel plated
2	Strap	1	Nylon / Polyester	Black
3	Cap	1 / 2	Polyurethane / Elastomer	Black
4	Joint (Neck strap only)	1	Polyacetal	Black
5	Adjuster (Neck strap only)	1	Nylon	Black
6	Clamp (Neck strap only)	1	PE	Black

Product no. / Dimensions

Product no.	Strap width	Strap length	Strap material	Cap material
STP-200	8	200	Nylon	Polyurethane x 1
STP-450	10	450	Polyester	Elastomer x 2

CR-20 KEY RING

- Hole milling is required for case installation.

CR-20 dimensions

- DXF/DWG/PDF drawings available on our website.

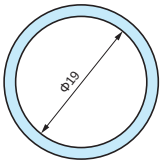

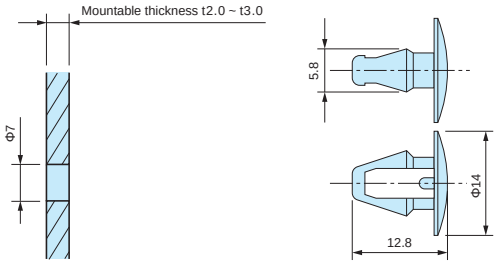

Components

Part name	Material	Color / Finish
Ring	SWRM 6 Steel	Nickel plated
Insert clip	Nylon	Black

Product no. / Dimensions

Product no.	Ring Φ	Installation hole	Mounting thickness
CR-20	Φ19	Φ7	t2.0 ~ t3.0

WSC series

IP67 SLOPED PLASTIC CASE

Ergonomic design and streamlined shape

Best suited for desktop operation with its sloped surface.
2 different inclined angles, 13° and 18° are available to select for various operating environments.
Streamlined shape enables the unit to be gripped better when used as a handheld instrument.

Photo : 13° type

Best suited for desktop operation with its sloped surface

High elasticity and good durability for maintaining waterproofing capability.
Built-in insert nut use for long-lasting protection even after frequent opening and closing.

APPLICATION EXAMPLE

Medical Measurement Device • Medical Controller

Transmitter • Network Equipment

RFID Card Reader

RFID Reader for ICT Entry/Exit System "KIDSNA connect" for Daycare/Preschool

Product by nextbeat (Japan)

Information on waterproofing after hole milling for switches

The waterproof performance will be lost once hole or cutout is machined on an IP rated enclosure.
To ensure it remains waterproof after hole/cutout machining, IP rated membrane pad or overlay is required.

Information on affixing of cables into waterproof enclosures

Please utilize a cable gland from our available range of cable gland accessories.

WSC series IP67 SLOPED PLASTIC CASE

IP67

Technical Data

Protection class : IP67
Operating temperature : -10°C ~ +60°C
Recommended torque : 0.2 ~ 0.3N • m

- Suitable as a desktop controller or measurement instrument with its ergonomic design.
- Streamlined shape enables the unit to be gripped better when used as a handheld instrument.
- IP67 protection class allows the unit to be used outdoors or under environments with water splashes, such as medical, research or measurement equipment.

Components

No.	Part name	Pcs	Material	Color / Finish
1	Top Cover	1	Flame-resistant ABS UL94V-0	Off-white • Black
2	Bottom base	1	Flame-resistant ABS UL94V-0	Off-white • Black
3	Gasket	1	Silicone	Black
4	Screw	4	Stainless steel binding head M2.5-8	Unfinished
5	Rubber feet	4	Polyurethane	Transparent

Accessories (Optional parts)

PCB mounting screw EM series
See page 123

Adhesive standoff AST series
See page 121

TORX screw MR series
See page 123

Cable gland
See page 333 ~ 340

WSC dimensions

■ DXF/DWG/PDF/STP drawings available on our website.

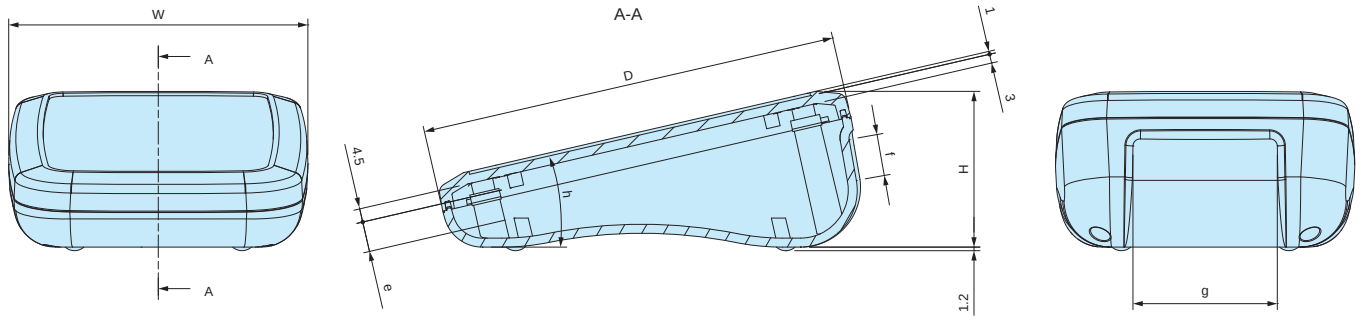

Top Cover (External)

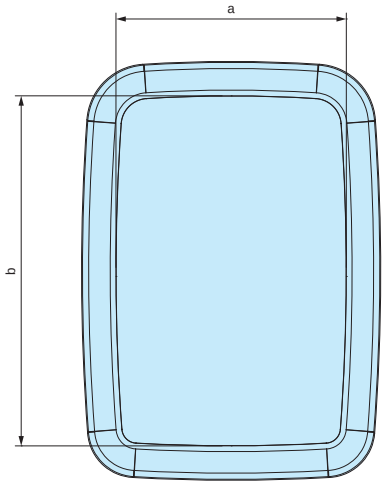

Top Cover (Internal)

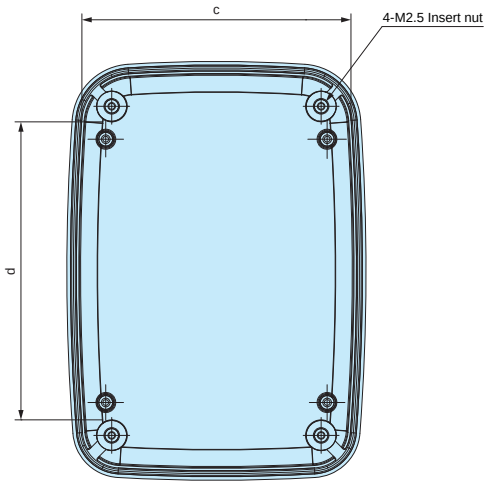

Product no. / Dimensions

Product no.		Dimensions										Face angle	Weight (g)
● Off-white	● Black	W	D	H	a	b	c	d	e	f	g	h	
WSC10-14-5W	WSC10-14-5B	100	140	52	77	117	87	100	10	13.9	48.2	13°	145
WSC10-14-7W	WSC10-14-7B	100	140	72	77	117	87	100	22	27.4	48.2	18°	168
WSC14-14-5W	WSC14-14-5B	140	140	52	117	117	128	100	10	13.8	80.5	13°	190
WSC14-14-7W	WSC14-14-7B	140	140	72	117	117	128	100	22	27.4	80.5	18°	218
WSC18-14-5W	WSC18-14-5B	175	140	52	152	117	163	95	11.3	13.8	103.5	13°	234
WSC18-14-7W	WSC18-14-7B	175	140	72	152	117	163	95	23.7	27.4	103.5	18°	262

Accessories (Optional parts)

WSP-M2.3 INCLINED SPACER for WSC

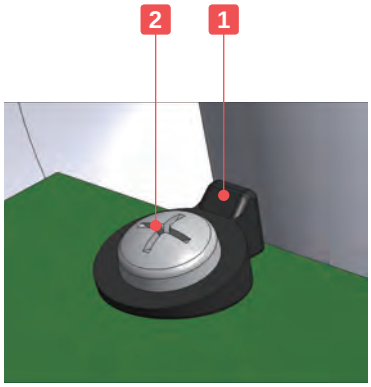

- Due to the sloped shape of the WSC series, boss-tops are also angled. So when mounting PCB on, some gap between the screw head and PCB surface will be generated as shown the diagram. WSP-M2.3 helps to fill the gap.
- EM-2.3-8 as PCB mounting screws are available for bosses in bottom base. (See page 123)

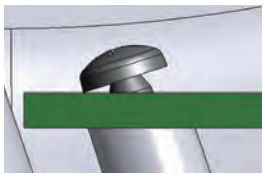

Components

No.	Part name	Pcs	Material	Color / Finish
1	Inclined spacer	4	POM	Black
2	Screw (Tapping M2.3-8)	4	Steel	Trivalent chromate

■ **Torque 0.1N • m**

Product no. / Details

Product no.	Suitable models	Pack of
WSP-M2.3	WSC (for bottom base PCB boss)	4

TWS series

PLASTIC ENCLOSURE with SILICONE PROTECTOR

Universal plastic enclosure with protective silicone protectors which functions both as an anti-slip grip and impact protection. Available in 9 sizes and selectable in 8 different color combinations. Suitable for measuring instruments, wireless communication devices, portable controller, data logger, and so on.

APPLICATION EXAMPLE

Digital Power Amplifier

Product by Dream (Japan)

GPS Data Logger

Product by Reds Fixit Shop (USA)

6 Channel Data Logger

Product by Irisense (UK)

Wireless Gateway

Product by Bresimar Automação (Portugal)

Tester for Photovoltaic System

Product by System JD (Japan)

Solar Cell Bypass Diode Checker

Product by Nippon Kernel System (Japan)

PV Insulation Resistance Checker for Solar Cell

Product by Shin-ei Electronic Measuring (Japan)

Vibration Monitor

Product by SIGMA Electronics (Japan)

TWS series PLASTIC ENCLOSURE with SILICONE PROTECTOR

Green and Pink shown above are custom colors.

Technical Data
Protection class: IP40 Operating temperature: -10°C ~ +60°C

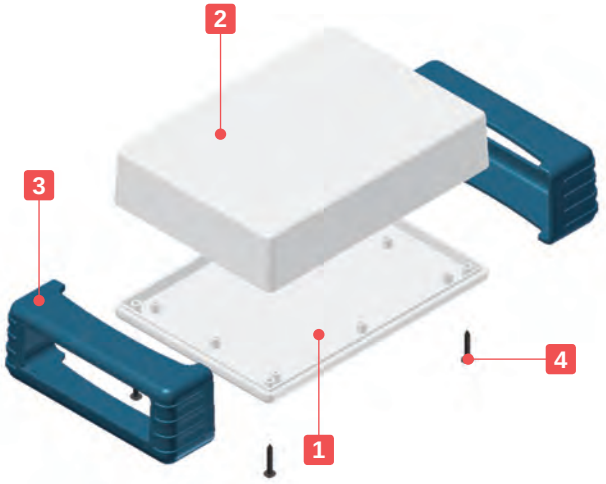

- Universal plastic enclosure with protective silicone protectors which functions both as an anti-slip grip and impact protection.
- Available in 9 sizes and selectable in 8 different color combinations.
- Enclosure is in B (Black - ABS UL94HB) and W (Off-white - ABS UL94V-0) model.
- Plastic case and protective silicone with screw fastening.
  *Note: utilize screws packaged with the silicone protectors for assembly.
- Use caution when assembling. Overtightening may damage the enclosure and silicone protectors.
- Custom color silicone protector is available from just 1 set. For 500 sets or more, manufacture costs will be similar to a standard color.
  Please inquire for more details.

Components

No.	Part name	Pcs	Material : Color / Finish
1	Cover	1	ABS UL94HB : Black • ABS UL94V-0 : Off-white
2	Bottom base	1	ABS UL94HB : Black • ABS UL94V-0 : Off-white
3	Silicone protector	2	Silicone : Yellow • Navy • Light gray • Black
4	Self-tapping screw	4	Steel M3-20 / Black trivalent chromate

Accessories (Optional parts)

Embedded battery box BC series
See page 125 ~ 128

Adhesive standoff AST series
See page 121

Tapping standoff TPS series
See page 122

PCB mounting screw EM series
See page 123

Color Type

Code	B Y Black / Yellow	B N Black / Navy	B L Black / Light gray	B B Black / Black
Color				
Code	**W Y Off-white / Yellow**	**W N Off-white / Navy**	**W L Off-white / Light gray**	**W B Off-white / Black**
Color				

ABS UL94HB (Black enclosure)

Product no. / Dimensions

■ Please suffix color code at the end of the product number.

Product no.	W	H	D	Weight (g)
TWS 7-3-13B□	71 (65)	32 (25.6)	136 (130)	117
TWS 7-5-13B□	71 (65)	56 (50.1)	136 (130)	147.5
TWS 9-4-17B□	91.5 (85.5)	41.5 (35.5)	176 (170)	193
TWS 9-6-17B□	91.5 (85.5)	66.5 (60.5)	176 (170)	243
TWS11-5-22B□	116 (110)	51.5 (45.3)	226 (220)	325.5
TWS11-8-22B□	116 (110)	81.5 (75.3)	226 (220)	399
TWS13-5-13B□	131 (125)	51 (45)	131 (125)	269.5
TWS13-5-18B□	131 (125)	51 (45)	181 (175)	322
TWS13-7-18B□	131 (125)	71 (65)	181 (175)	371

■ ( ) value = enclosure dimension.

ABS UL94V-0 (Off-white enclosure)

Product no. / Dimensions

■ Please suffix color code at the end of the product number.

Product no.	W	H	D	Weight (g)
TWS 7-3-13W□	71 (65)	32 (25.6)	136 (130)	126
TWS 7-5-13W□	71 (65)	56 (50.1)	136 (130)	163
TWS 9-4-17W□	91.5 (85.5)	41.5 (35.5)	176 (170)	211
TWS 9-6-17W□	91.5 (85.5)	66.5 (60.5)	176 (170)	266
TWS11-5-22W□	116 (110)	51.5 (45.3)	226 (220)	356.5
TWS11-8-22W□	116 (110)	81.5 (75.3)	226 (220)	438
TWS13-5-13W□	131 (125)	51 (45)	131 (125)	294
TWS13-5-18W□	131 (125)	51 (45)	181 (175)	353
TWS13-7-18W□	131 (125)	71 (65)	181 (175)	407.5

■ ( ) value = enclosure dimension.

TWS dimensions

■ DXF/DWG/PDF/STP drawings available on our website.

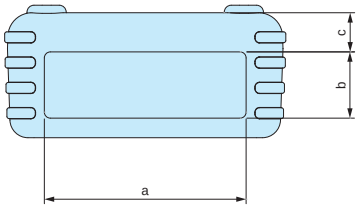

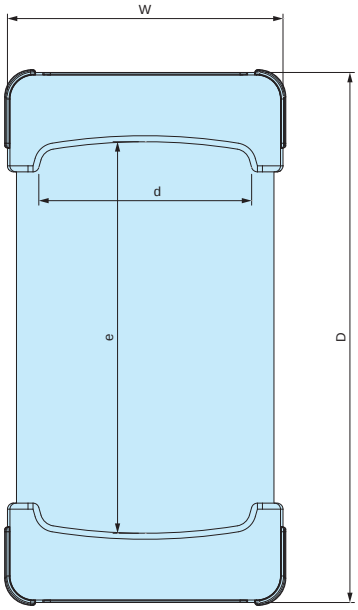

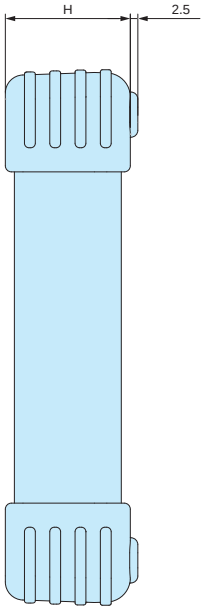

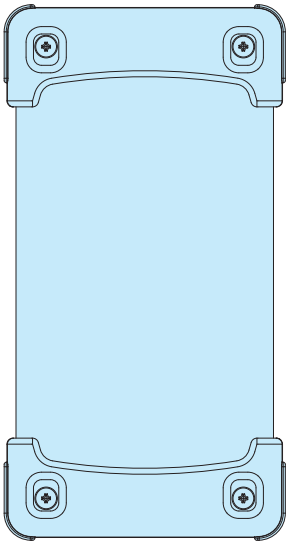

■ Please suffix color code at the end of the product number.

Product no.	W	H	D	a	b	c	d	e
TWS 7-3-13□□	71	32	136	52	13.5	11.8	54	98
TWS 7-5-13□□	71	56	136	52	37.5	11.9	54	98
TWS 9-4-17□□	91.5	41.5	176	67	22	13	71	130
TWS 9-6-17□□	91.5	66.5	176	67	46.5	13.3	71	130
TWS11-5-22□□	116	51.5	226	80	29	14.3	89	166
TWS11-8-22□□	116	81.5	226	80	58	14.5	89	166
TWS13-5-13□□	131	51	131	101	29.5	13.5	104	76
TWS13-5-18□□	131	51	181	101	29.5	13.5	104	126
TWS13-7-18□□	131	71	181	101	48.5	14	104	126

Enclosure dimensions

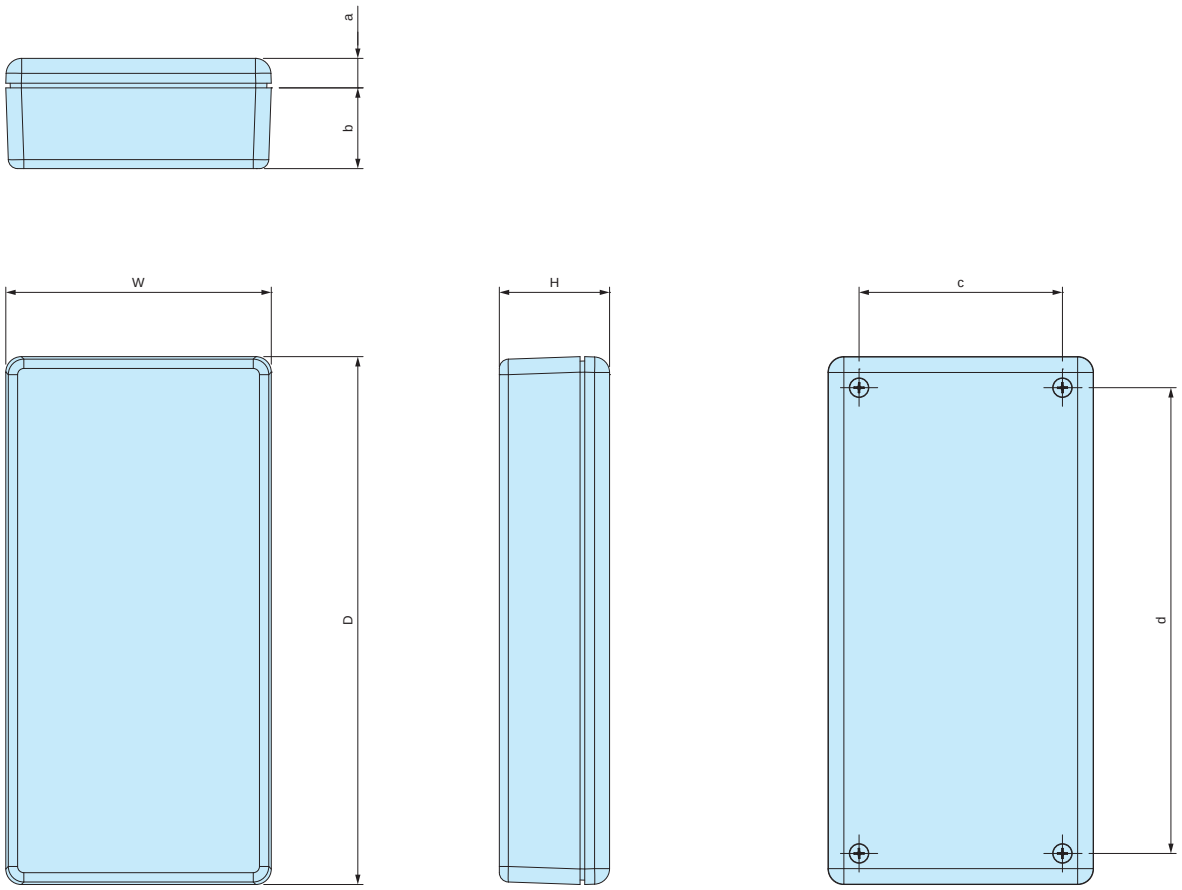

■ Please suffix color code at the end of the product number.

Product no.	W	H	D	a	b	c	d
TWS 7-3-13□□	65	25.6	130	8.1	17.5	47	112
TWS 7-5-13□□	65	50.1	130	8.1	42	47	112
TWS 9-4-17□□	85.5	35.5	170	9.5	26	65.5	150
TWS 9-6-17□□	85.5	60.5	170	9.5	51	65.5	150
TWS11-5-22□□	110	45.3	220	10.3	35	88	198
TWS11-8-22□□	110	75.3	220	10.3	65	88	198
TWS13-5-13□□	125	45	125	8.5	36.5	107	107
TWS13-5-18□□	125	45	175	8.5	36.5	105	155
TWS13-7-18□□	125	65	175	8.5	56.5	105	155

TW•TWN series MULTIPURPOSE PLASTIC ENCLOSURE

NEW SIZE

Technical Data

Protection class: IP40
Operating temperature: -10°C ~ +60°C

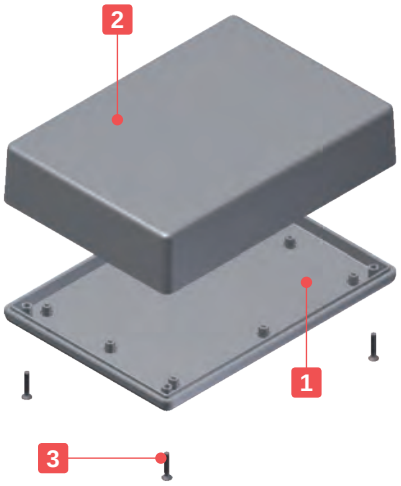

- Universal plastic enclosure with screw fastening.
- 26 sizes are available in 2 colors; Black (ABS UL94HB) and Off-white (ABS UL94V-0).
- Suitable for measuring instruments, testing devices, wireless communication devices, medical devices, and so on.

Components

No.	Part name	Pcs	Material : Color / Finish
1	Cover	1	TW : ABSUL94HB / Black
			TWN : ABS UL94V-0 / Off-white
2	Bottom base	1	TW : ABSUL94HB / Black
			TWN : ABS UL94V-0 / Off-white
3	Self-tapping screw	2 or 4	TW : Steel / Black trivalent chromate
			TWN : Steel / Nickel plated

Accessories (Optional parts)

Silicone band SIB series
See page 110

Suspension bracket WM series
See page 116

Embedded battery box BC series
See page 125 ~ 128

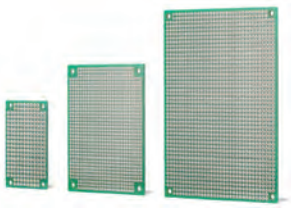

Universal PCB PCB series
See website

Adhesive standoff AST series
See page 121

PCB mounting screw EM series
See page 123

Tapping standoff TPS series
See page 122

Color Type

Series	Code	Color	Screw
TW	B	Black	Black trivalent chromate
TWN	W	Off-white	Nickel plated

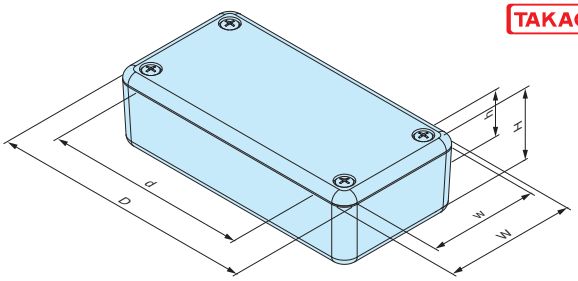

TW series (ABS UL94HB)

■ DXF/DWG/PDF/STP drawings available on our website.

Product no. / Dimensions

Product no.	External dimensions			Internal dimensions			Screw (Self-tapping flat head)	Weight (g)
	W	H	D	w	h	d		
TW 4-2- 5B	35	20	50	28.2	12	32.6	M2.6-12 x 2 pcs	13.5
TW 4-2- 6B	35	20	60	28.2	12	42.6	M2.6-12 x 2 pcs	15.5
TW 4-2- 8B	40.3	20	80.3	33.5	12	62.5	M2.6-12 x 2 pcs	22
TW 5-2- 5B	50	15	50	42.8	7	31.9	M2.6-12 x 4 pcs	18
TW 5-2- 7B	50	15	70	43.2	7	52.9	M2.6-12 x 4 pcs	22
TW 5-3- 5B	50	25	50	42.8	17	31.9	M2.6-12 x 4 pcs	22
TW 5-3- 7B	50	27.5	70	43.2	19.5	52.9	M2.6-12 x 4 pcs	29
TW 5-3- 9B	45	25	90	37.7	16	69.4	M3-12 x 4 pcs	30.5
TW 5-3-10B	50	30	100	42.4	20.8	80.8	M2.6-12 x 4 pcs	41.5
TW 5-4- 7B	50	40	70	42.5	32	52.9	M2.6-12 x 4 pcs	35
TW 7-2-11B	70	20	105	61.2	10.5	83	M2.6-14 x 4 pcs	56.5
TW 7-3-13B	65	25.6	130	55.3	14.3	105	M3-16 x 4 pcs	76
TW 7-4-11B	70	35	105	61.2	25.5	83	M2.6-14 x 4 pcs	70
TW 7-5-11B	70	50	105	61.1	40.5	83	M2.6-14 x 4 pcs	83
TW 7-5-13B	65	50.1	130	55.3	38.8	105	M3-16 x 4 pcs	100
TW 8-2- 8B	80	20	80	71.6	10.5	59	M2.6-12 x 4 pcs	49
TW 8-4- 8B	80	40	80	71.6	30.5	59	M2.6-12 x 4 pcs	65
TW 9-4-17B	85.5	35.5	170	75.7	24	143	M3-16 x 4 pcs	133
TW 9-6-17B	85.5	60.5	170	75.7	49	143	M3-16 x 4 pcs	168
TW11-5-22B	110	45.3	220	100.1	33.8	191	M3-16 x 4 pcs	223
TW11-8-22B	110	75.3	220	99.3	63.8	191	M3-16 x 4 pcs	277
TW13-3-13B	125	25	125	114.5	13.7	100	M3-16 x 4 pcs	135
TW13-3-18B	125	25	175	114.5	13.7	148	M3-16 x 4 pcs	184.5
TW13-5-13B	125	45	125	114.5	33.7	100	M3-16 x 4 pcs	165.5
TW13-5-18B	125	45	175	114.5	33.7	148	M3-16 x 4 pcs	218
TW13-7-18B	125	65	175	114.2	53.7	148	M3-16 x 4 pcs	254

TWN series (ABS UL94V-0)

Product no. / Dimensions

Product no.	External dimensions			Internal dimensions			Screw (Self-tapping flat head)	Weight (g)
	W	H	D	w	h	d		
TWN 4-2- 5W	35	20	50	28.2	12	32.6	M2.6-12 x 2 pcs	16.5
TWN 4-2- 6W	35	20	60	28.2	12	42.6	M2.6-12 x 2 pcs	18
TWN 4-2- 8W	40.3	20	80.3	33.5	12	62.5	M2.6-12 x 2 pcs	26
NEW TWN 5-2- 5W	50	15	50	42.8	7	31.9	M2.6-12 x 4 pcs	20
TWN 5-2- 7W	50	15	70	43.2	7	52.9	M2.6-12 x 4 pcs	24.5
NEW TWN 5-3- 5W	50	25	50	42.8	17	31.9	M2.6-12 x 4 pcs	26
TWN 5-3- 7W	50	27.5	70	43.2	19.5	52.9	M2.6-12 x 4 pcs	33
TWN 5-3- 9W	45	25	90	37.7	16	69.4	M3-16 x 4 pcs	35
NEW TWN 5-3-10W	50	30	100	42.4	20.8	80.8	M2.6-12 x 4 pcs	46.5
TWN 5-4- 7W	50	40	70	42.5	32	52.9	M2.6-12 x 4 pcs	39.5
TWN 7-2-11W	70	20	105	61.2	10.5	83	M2.6-14 x 4 pcs	64.5
TWN 7-3-13W	65	25.6	130	55.3	14.3	105	M3-16 x 4 pcs	85
TWN 7-4-11W	70	35	105	61.2	25.5	83	M2.6-14 x 4 pcs	80
TWN 7-5-11W	70	50	105	61.1	40.5	83	M2.6-14 x 4 pcs	94.5
TWN 7-5-13W	65	50.1	130	55.3	38.8	105	M3-16 x 4 pcs	115.5
TWN 8-2- 8W	80	20	80	71.6	10.5	59	M2.6-12 x 4 pcs	55.5
TWN 8-4- 8W	80	40	80	71.6	30.5	59	M2.6-12 x 4 pcs	75
TWN 9-4-17W	85.5	35.5	170	75.7	24	143	M3-16 x 4 pcs	151
TWN 9-6-17W	85.5	60.5	170	75.7	49	143	M3-16 x 4 pcs	191
TWN11-5-22W	110	45.3	220	100.1	33.8	191	M3-16 x 4 pcs	254
TWN11-8-22W	110	75.3	220	99.3	63.8	191	M3-16 x 4 pcs	316
TWN13-3-13W	125	25	125	114.5	13.7	100	M3-16 x 4 pcs	156.5
TWN13-3-18W	125	25	175	114.5	13.7	148	M3-16 x 4 pcs	206.5
TWN13-5-13W	125	45	125	114.5	33.7	100	M3-16 x 4 pcs	190
TWN13-5-18W	125	45	175	114.5	33.7	148	M3-16 x 4 pcs	249
TWN13-7-18W	125	65	175	114.2	53.7	148	M3-16 x 4 pcs	290.5

TWSC series SILICONE PROTECTOR for TW•TWN

Color Type

Code	Y Yellow	N Navy	L Light gray	B Black
Color				

- Silicone Protector for TW and TWN series. Selectable in 4 colors.
- Available as a set of 2 pcs.
- Custom color is available from just 1 set. For 500 sets or more, manufacture costs will be similar to a standard color. Please inquire for more details. For custom color order, please specify **PANTONE**® color code.
- Use caution when assembling. Overtightening may damage the enclosure and silicone protectors.

TWSC dimensions

- DXF/DWG/PDF drawings available on our website.

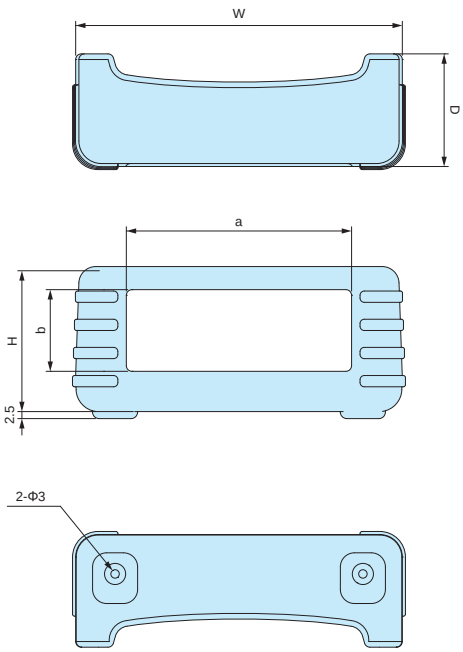

APPLICATION EXAMPLE

Wi-Probe DIRECT2 Monitoring Device

Product by TAKASAKI KYODO COMPUTING CENTER (Japan)

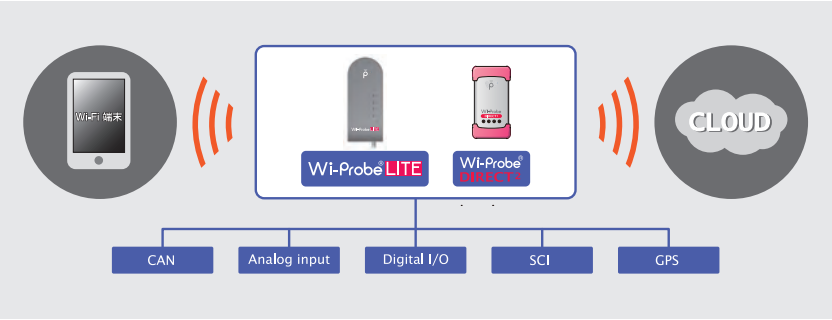

*Pink shown above is custom color.

Components

Part name	Pcs	Material	Color / Finish
Silicone protector	1 set (2 pcs)	Silicone	Yellow • Navy • Light gray • Black
Self-tapping screw	4	Steel M3-20	Black trivalent chromate

Product no. / Dimensions

- Please suffix color code at the end of the product number.

Product no.	W	H	D	a	b	Suitable models	Weight (g)
TWSC 7-3□	71	32	27	52	13.5	TW • TWN 7-3-13	41
TWSC 7-5□	71	56	27	52	37.5	TW • TWN 7-5-13	47.5
TWSC 9-4□	91.5	41.5	33	67	22	TW • TWN 9-4-17	60
TWSC 9-6□	91.5	66.5	33	67	46.5	TW • TWN 9-6-17	75
TWSC11-5□	116	51.5	40	80	29	TW • TWN11-5-22	102.5
TWSC11-8□	116	81.5	40	80	58	TW • TWN11-8-22	122
TWSC13-5□	131	51	38	101	29.5	TW • TWN13-5-13 TW • TWN13-5-18	104
TWSC13-7□	131	71	38	101	48.5	TW • TWN13-7-18	117

SIB series SILICONE BAND

Utilization example

- Silicone band designed to fit TW and TWN series.
  Refer to the table below for size suitability.
- Silicone band provides both shock resistance and non-slip grips for the TW & TWN enclosure.

Color Type

Code	R Red	O Orange	Y Yellow	G Green	C Cyan	N Navy	L Light gray	B Black
Color								

SIB dimensions

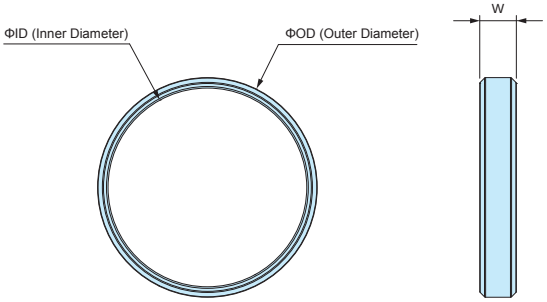

Components

Part name	Pcs	Material	Color
Silicone band	Pair (2 pcs)	Silicone	Red • Orange • Yellow • Green • Cyan • Navy • Light gray • Black

Product no. / Dimensions

- Please suffix color code at the end of the product number.

Product no.	W	ID	OD	Suitable models	Weight (g)
SIB-21□	6	21	25	TW • TWN4-2-5 • 4-2-6 • 4-2-8 • 5-2-5 • 5-2-7 • 5-3-9	2
SIB-38□	7	38	42	TW • TWN5-3-5 • 5-3-7 • 5-4-7 • 5-3-10 • 7-2-11 • 7-4-11 7-3-13 • 8-2-8	4
SIB-58□	8	58	63	TW • TWN7-5-11 • 7-5-13 • 8-4-8 • 9-4-17	10
SIB-72□	10	72	77	TW • TWN9 -6-17 • 11-5-22 • 11-8-22 • 13-3-13 • 13-5-13 13-3-18 • 13-5-18 • 13-7-18	14

SHOW IT THROUGH SKELETON CASE

An elegant and sophisticated curved design acrylic case with stylish aluminium pillars at the corners. Perfect for exhibitions or demostration events to both showcase the internals and provide a unique product visual appeal.

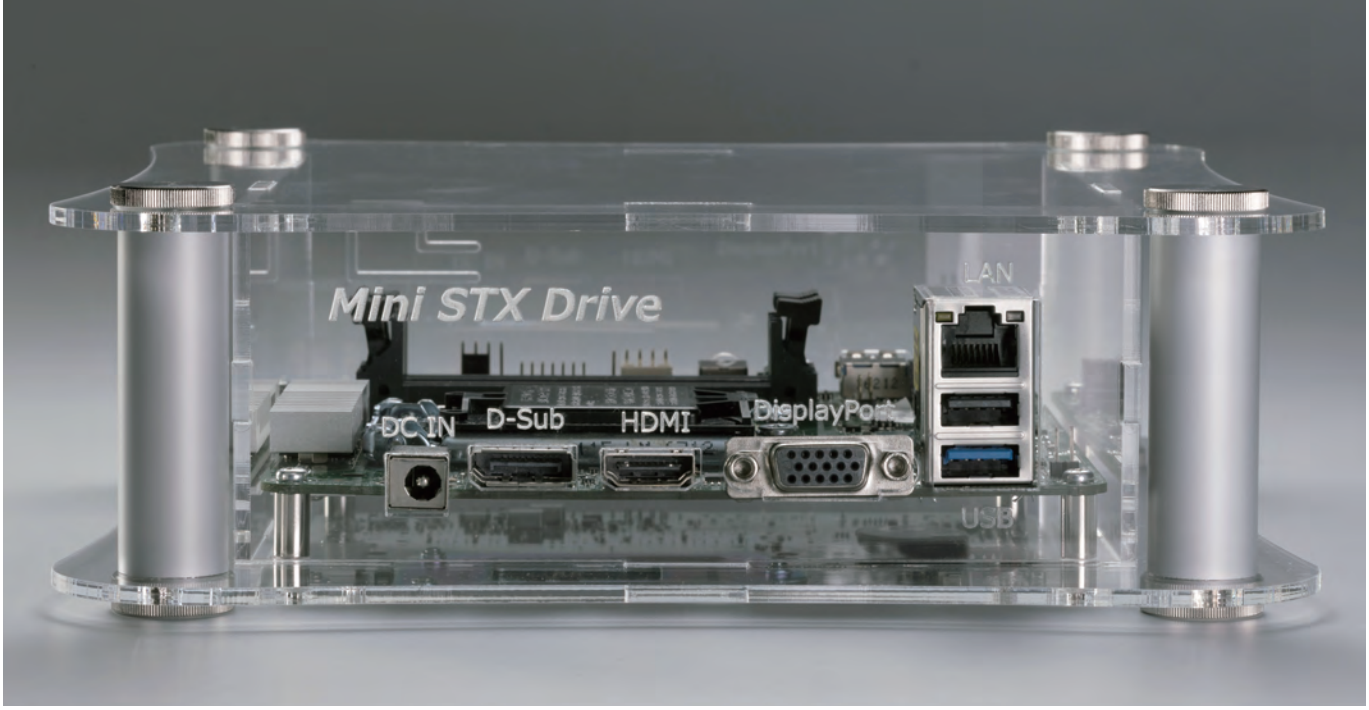

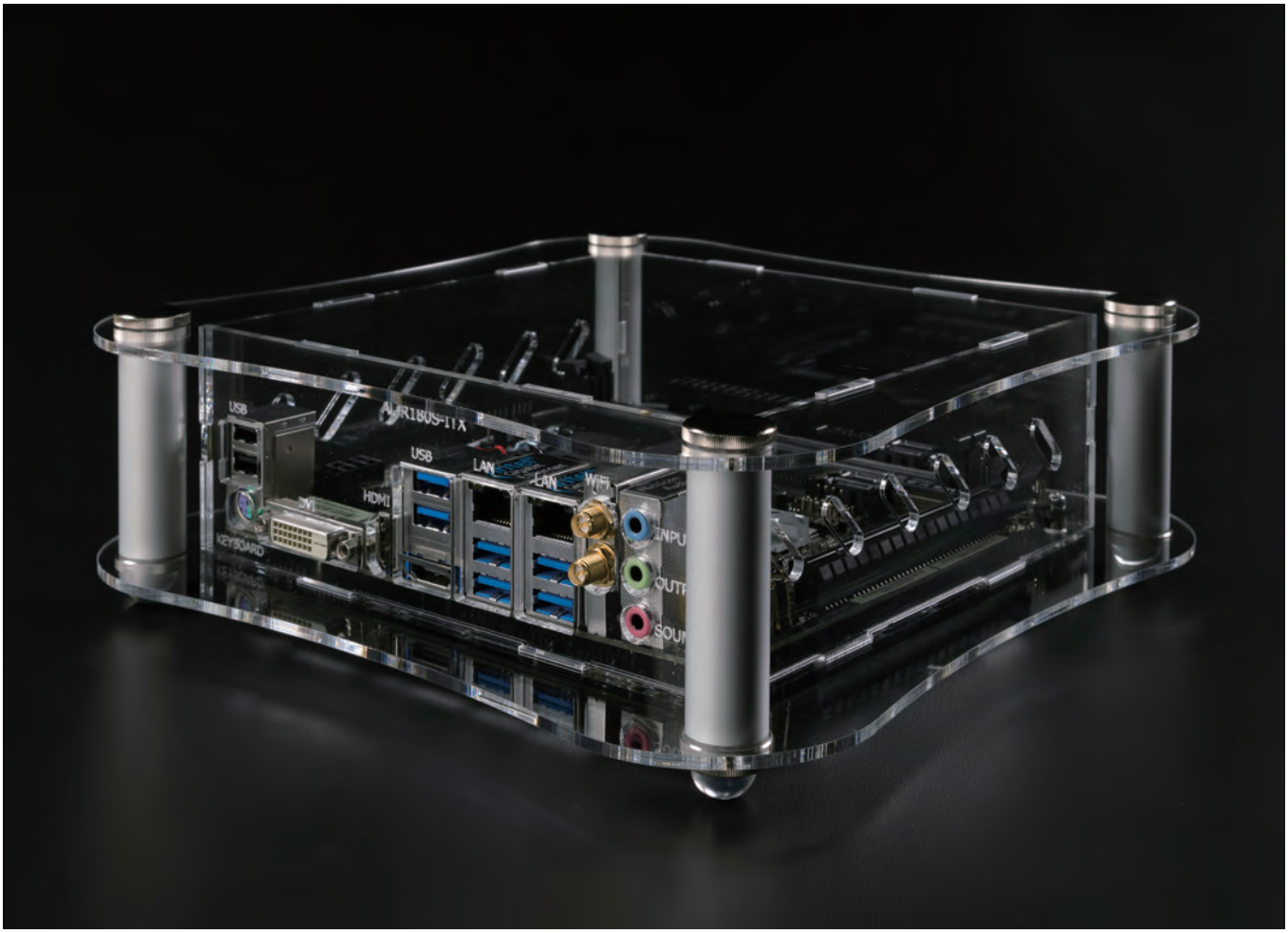

Easy Assembly Curved Design Case

Custom Sized Cases Available

Custom sized cases are available 50 ~ 500 width / length(depth) and 30 ~ 500 height in 1mm intervals.
See SKLF series on our website for further details.

CUSTOMIZATION POSSIBILITIES

Printing

Print your logo, text and more using our customization services, such as inkjet printing.

Color Variation

Available in different color types, as well as smoked / tinted shades.

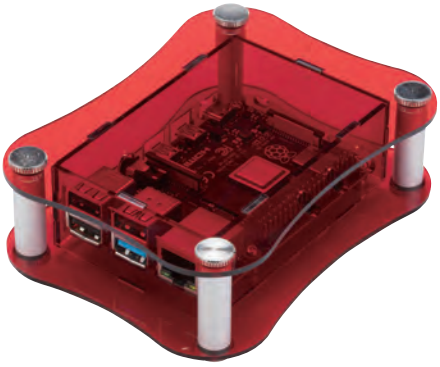

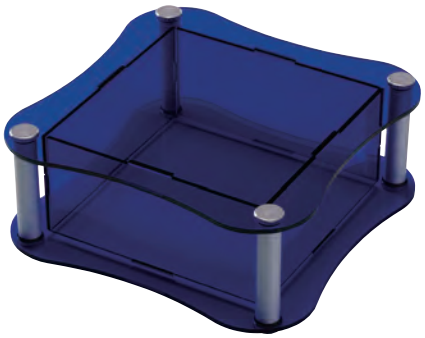

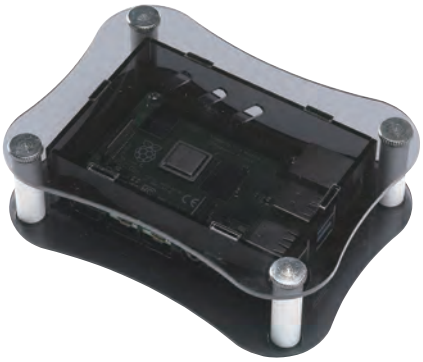

SKL series SKELETON ACRYLIC CASE

NEW

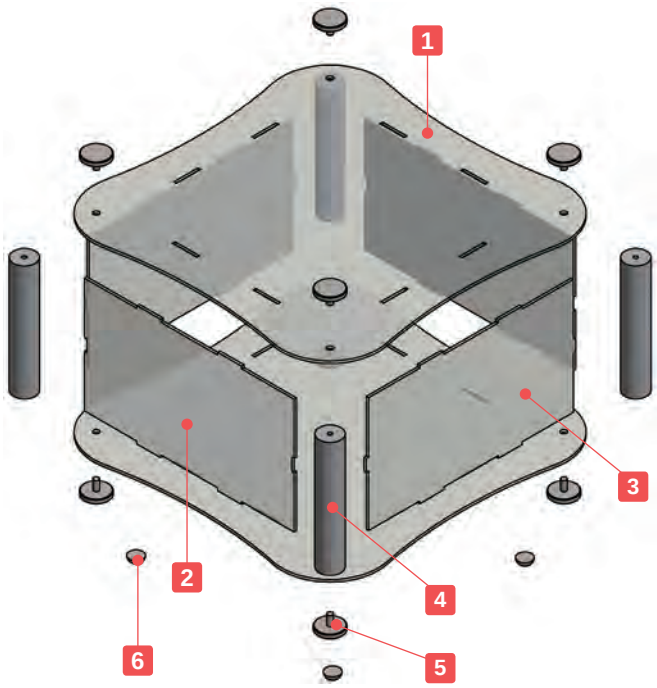

- Curved transparent acrylic case with corner support columns.
- 5 different sizes are available.
- Usable as a display enclosure for a unique and luxurious outlook.
- SKL11-5-17 and 11-8-17 models are compatible with the Euro Board.

  SKL18-7-18 and 18-10-18 models are compatible with the Mini ITX board.
- Possible to be used in a flat layout, or a standing layout.
- Knurled thumb screws for easy hand assembly.

- Custom sized cases are available. See SKLF series on our website for further details.

※Ethanol or other alcoholic solvents may cause the acrylic panel to crack. Use a neutral cleaner or specialized acrylic cleaning solvent for cleaning.

Components

No.	Part name	Pcs	Material	Color / Finish
1	Top · Bottom cover	1 each	Acrylic	Transparent
2	W panel	2	Acrylic	Transparent
3	D panel	2	Acrylic	Transparent
4	Pillar	4	Extruded aluminium A6063S-T5	Silver / Anodized
5	Knurled thumb screw	8	Brass	Nickel plated
6	Rubber feet	4	Polyurethane	Transparent

SKL dimensions

■ DXF/DWG/PDF/STP drawings available on our website.

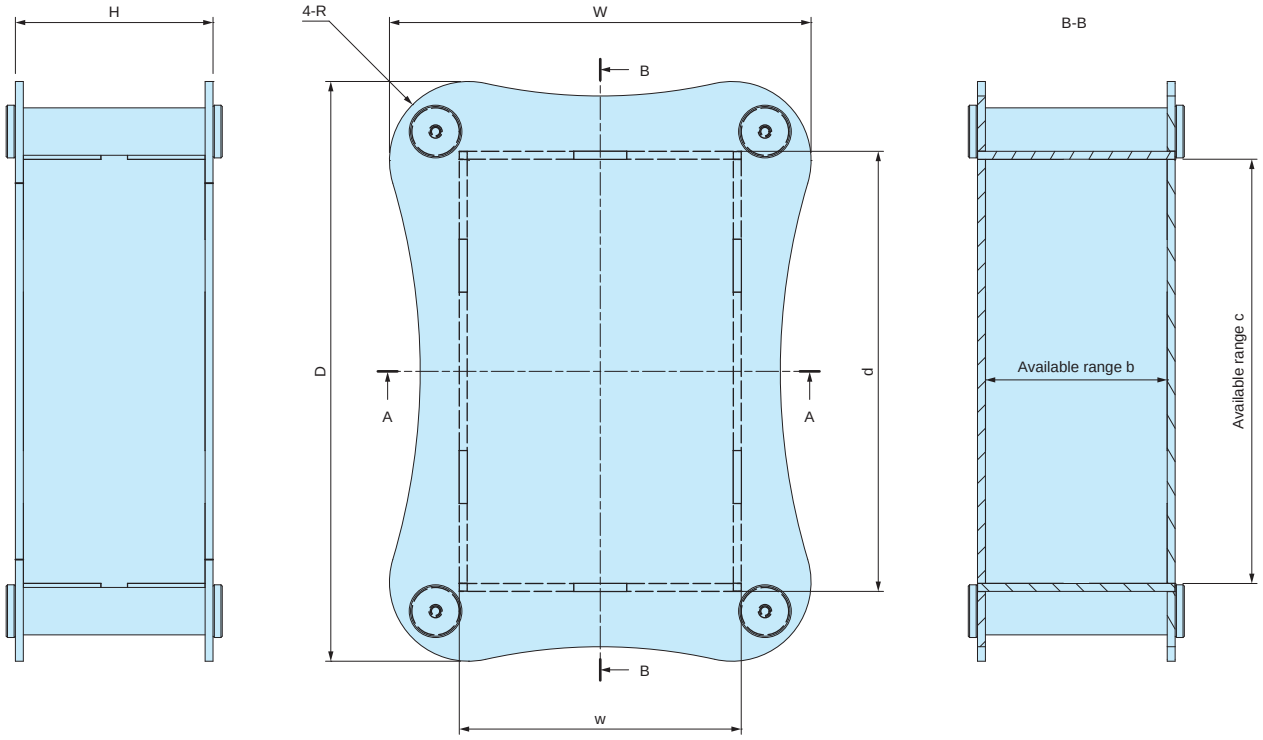

Knurled thumb screw dimensions

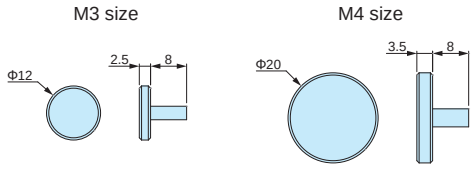

Rubber feet dimensions

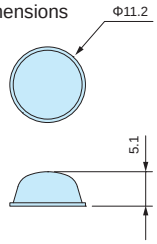

Product no. / Dimensions

Product no.	External dimensions			Case dimensions		Available range			R	t	Screw size	Weight (g)
	W	H	D	w	d	a	b	c				
SKL10- 5-10	141	51	141	105	105	101	47	101	25	2	M3	191.5
SKL11- 5-17	165	47	225	107	167	101	41	161	25	3	M4	507
SKL11- 8-17	165	77	225	107	167	101	71	161	25	3	M4	643
SKL18- 7-18	239	67	239	177	177	171	61	171	40	3	M4	762
SKL18-10-18	239	102	239	177	177	171	96	171	40	3	M4	940.5

Accessories (Optional parts)

Adhesive standoff AST series
See page 121

Cooling fan AGE • IGE series
See website

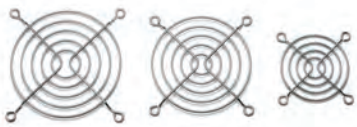

Finger guard HF-G series
See website

WPMB-M4-3 series POLE MOUNTING BRACKET

- Pole mount bracket made from weather resistant ASA material.
- Suitable for both vertical and horizontal mounting.
- IPX7 protection can be maintained through the use of sealing washers.
- Hole milling is required for bracket installation.
- Pole mount is possible with the use of PKB series mounting belt. (see page 324 for PKB series)

WPMB-M4-3 dimensions

- DXF/DWG/PDF/STP drawings available on our website.

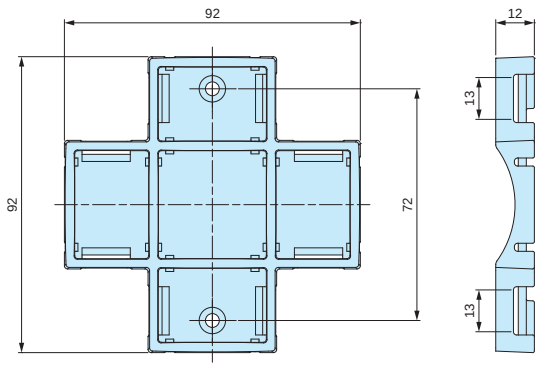

Installation

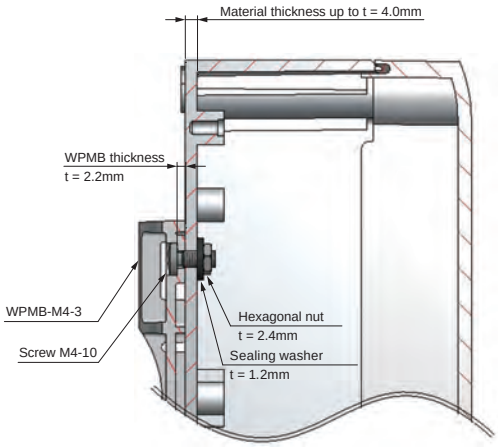

Components

No.	Part name	Pcs	Material	Color / Finish
1	Bracket	1	ASA UL94HB	White gray • Dark gray
2	Sealing washer	2	NBR, SPCC	Black
3	Screw (M4-10 Pan head)	2	Stainless steel	Unfinished
4	Hexagonal nut (M4 - JIS Type 3)	2	Stainless steel	Unfinished

Product no. / Dimensions

Product no.		Material thickness to install	Recommended torque	Max load (kg)	Weight (g)
White gray	Dark gray				
WPMB-M4-3G	WPMB-M4-3D	Up to t = 4.0mm	0.45N • m	5	26.5

- Recommended torque listed is for reference only; actual may differ. Assemble after testing torque.

WM series SUSPENSION BRACKET

How to install

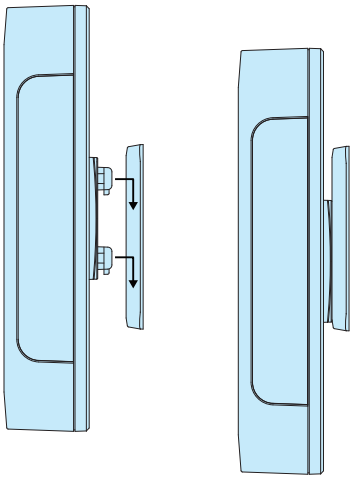

- Plastic wall mounting bracket. Easy attachment and removal.
- Large and small bracket types are available.
- Applicable to be used on plastic or metallic enclosures with a panel thickness of 0.8 ~ 3.5mm.
- To attach the suspension hook onto the enclosure, hole milling is required.
- Please be aware of the insertion direction of the suspension hook against the mounting base when attaching.

Technical Data
Max load : 2 kg - WM-1 5 kg - WM-2

*The max load values listed are static load values only. Use caution when handling.

WM dimensions

WM-1

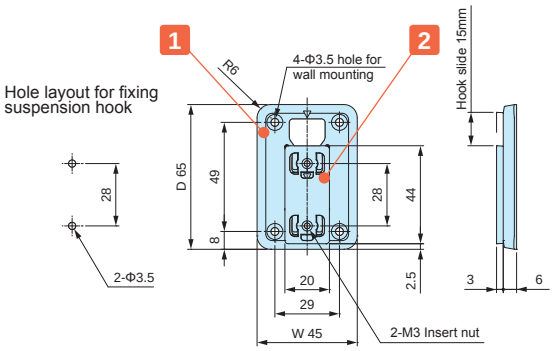

WM-2

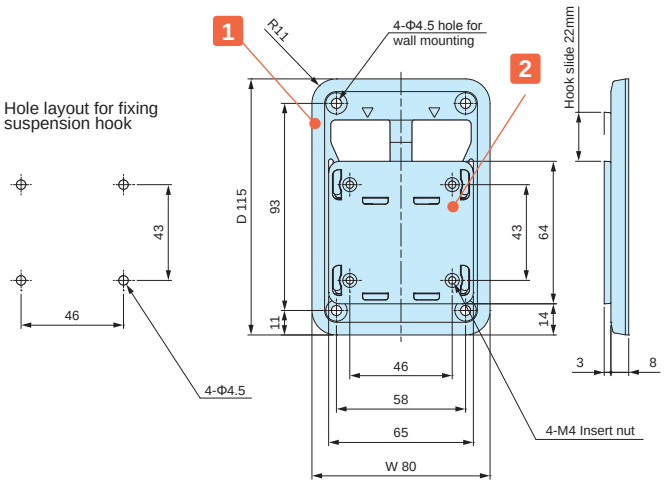

- DXF/DWG/PDF/STP drawings available on our website.

Components

No.	Part name	Pcs	Material	Color / Finish
1	Mounting base	1	PC + ABS UL94HB	Off-white • Dark gray
2	Suspension hook	1	PC + ABS UL94HB	Off-white • Dark gray
–	Screw	2 (WM-1) 4 (WM-2)	Steel	Nickel plated

Included Screw WM-1□ : Bind M3-8
WM-2□ : Bind M4-8

Product no. / Dimensions

Product no.		W	D	Mountable thickness	Weight (g)
● Off-white	● Dark gray				
WM-1W	WM-1D	45	65	t0.8 ~ t3.5	11.5
WM-2W	WM-2D	80	115	t0.8 ~ t3.5	48

NMG series NEODYMIUM MAGNET

Round magnet

■ DXF/DWG/PDF drawings available on our website.

■ Material / Finish: Neodymium / Nickel plated

■ Please attach using a strong adhesive.

NMG dimensions

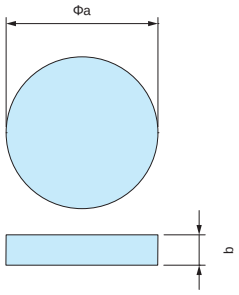

Components

Product no.	a	b	Weight (g)	Flux Density	Absorption
NMG3-15N	15	3	4	214.4 mT	2.44 kgf
NMG3-20N	20	3	7.1	170.7 mT	3.26 kgf
NMG5-22N	22	5	11.4	247.2 mT	5.91 kgf
NMG5-25N	25	5	18.4	221.9 mT	6.89 kgf

Round magnet with countersunk hole

■ Please fasten with a screw.

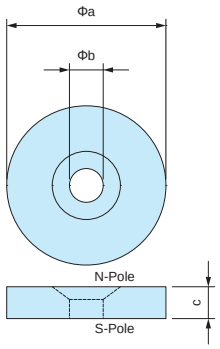

Components

Product no.	a	b	c	Countersunk size	Weight (g)	Flux Density	Absorption
NMG3-15M3	15	3.2	3	M3	3.8	214.3 mT	2.33 kgf
NMG3-20M3	20	3.2	3	M3	6.9	170.6 mT	3.17 kgf
NMG5-22M4	22	4.3	5	M4	13.7	247.2 mT	5.68 kgf
NMG5-25M5	25	5.3	5	M5	17.6	221.9 mT	6.58 kgf

Rectangular magnet with countersunk holes

■ Please fasten with a screw.

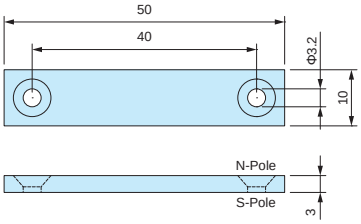

Components

Product no.	a	b	c	Countersunk size	Weight (g)	Flux Density	Absorption
NMG3-50M3	50	10	3	M3	11.3	210.0 mT	9.1 kgf

Example 1 The magnetic force remains strong even through plastic.

Make recessed pocket on the inside wall.

Glue on.

Attach onto a metallic surface.

Example 2

Make holes

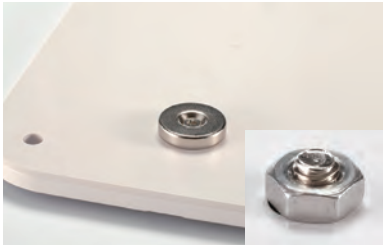

Fasten with a screw and nut.

Attach onto a metallic surface.

CAUTION: Handle with care to avoid personal injury or damage to the magnet.

GDH series PLASTIC BELT CLIP

GDH dimensions

■ DXF/DWG/PDF drawings available on our website.

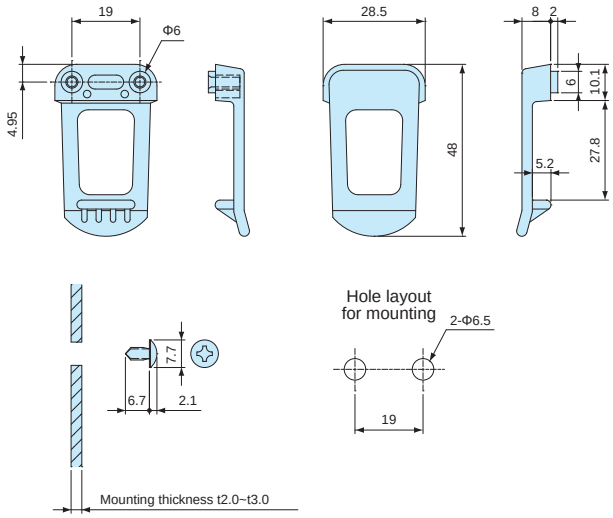

Components

No.	Part name	Pcs	Material	Color / Finish
1	Clip	1	ABS UL94HB	White • Black
2	Screw	2	Steel M3.5-6	Zinc plated

Product no. / Dimensions

Product no.		W	H	D
● White	● Black			
GDH-1W	GDH-1B	28.5	10	48

DK series STEEL BELT CLIP

DK dimensions

■ DXF/DWG/PDF drawings available on our website.

DK-1

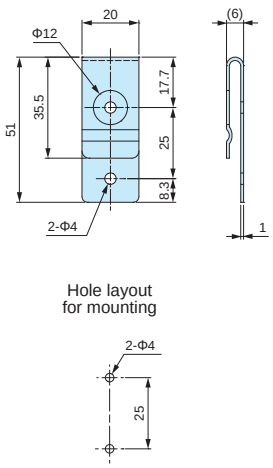

DK-2

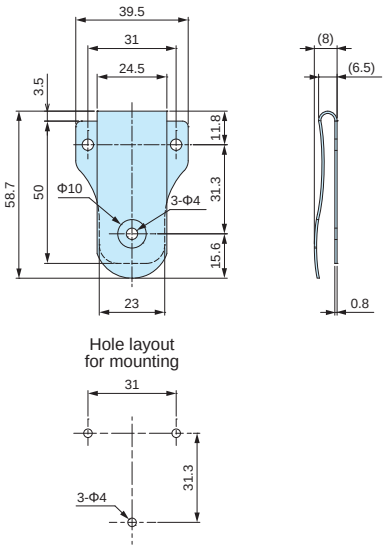

Product no. / Dimensions

Product no.	Material	Finish
DK-1	Steel SPCC t=1.0	Chrome plated
DK-2	Steel SPCC t=0.8	Chrome plated

DRA series DIN-RAIL MOUNTING BASE

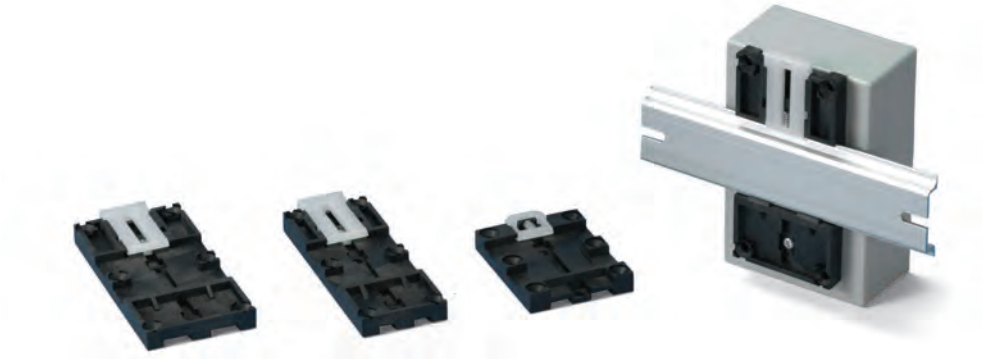

■ For installation of enclosures, PCB and other parts onto a DIN rail.
■ Simple installation and removal via the pull lever.

■ **NOTE**

Before installation, please ensure that the lever is not fully hidden behind the enclosure

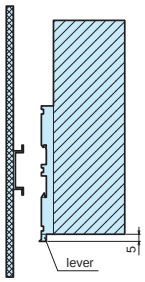

Technical Data
Max load : 5kg

DRA dimensions

DRA-1

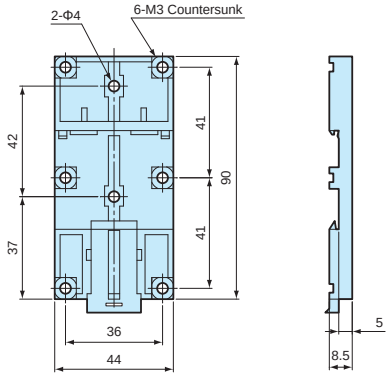

DRA-2

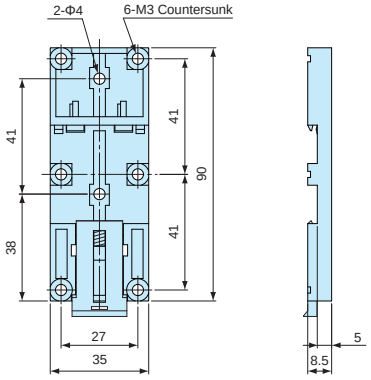

DRA-3

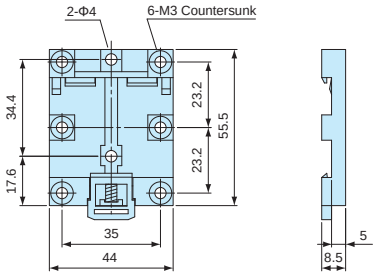

■ DXF/DWG/PDF drawings available on our website.

Product no. / Dimensions

Product no.	Material (body)	Material (lever)	Color	Weight (g)
DRA-1	PPE : SB UL94V-1	Nylon 66 UL94V-2	Black : White	16.4
DRA-2	PPE : SB UL94V-1	Nylon 66 UL94V-2	Black : White	14.5
DRA-3	PPE : SB UL94V-1	Nylon 66 UL94V-2	Black : White	10.4

DRT series DIN-RAIL MOUNTING BASE

DRT dimensions

■ DXF/DWG/PDF drawings available on our website.

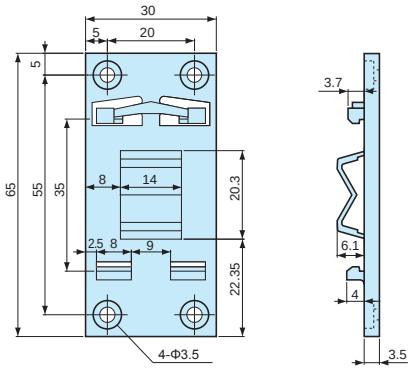

■ **NOTE**

Before installation, please ensure that the length (from top) of the enclosure is equal to, or less than 100mm from the center of the mounting base.

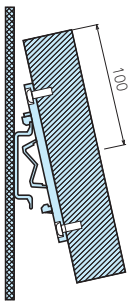

■ For installation of enclosures, PCB and other parts onto a DIN rail.
■ Simple installation and removal by tilting the case at an angle and sliding it in/out.

Technical Data
Max load : 1kg Operating temperature: -20°C ~ +70°C

Product no. / Dimensions

Product no.	Material	Color	Weight (g)
DRT-1	PC/ABS UL94V-0	Light gray	7.3

CUBE series CUBE STANDOFF

NEW

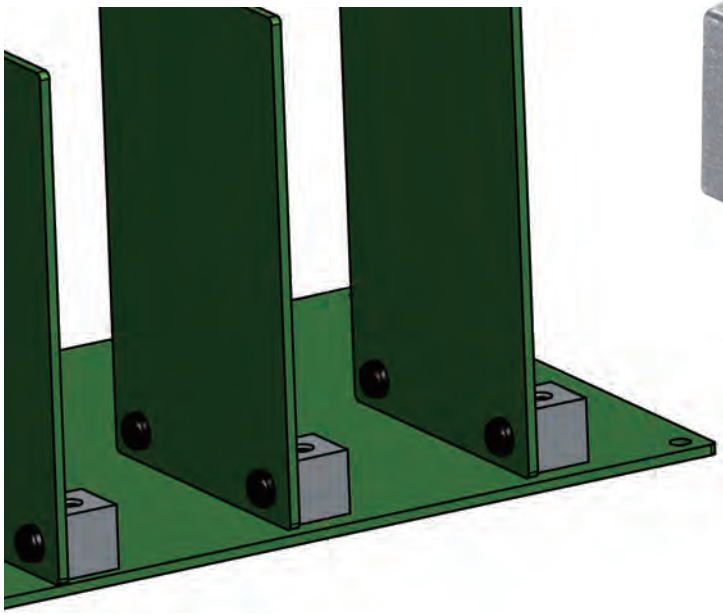

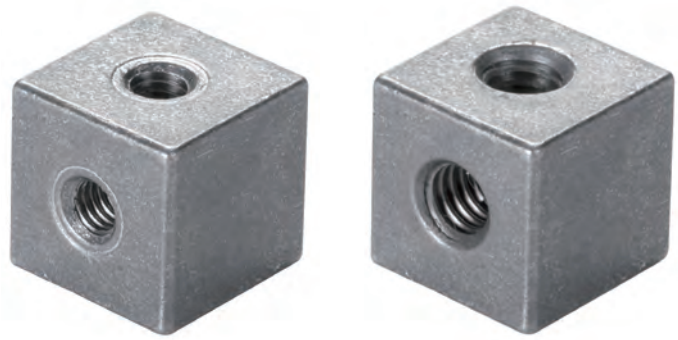

CUBE dimensions

CUBE10-M3

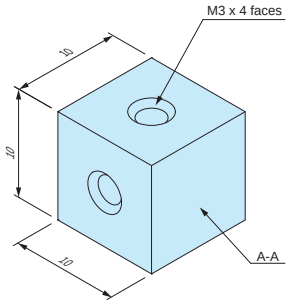

CUBE10-M4

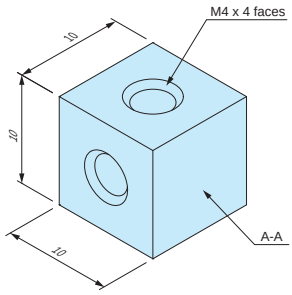

A-A

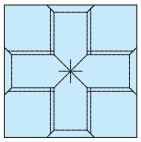

A-A

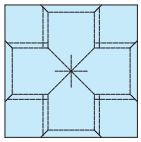

- 10mm threaded cube shape standoff with a thread on 4 faces.
- M3 and M4 thread models available.
- Conveniently usable when installing PCB or metal plate upright.

Product no. ■ Zinc diecast : Glossy barrel finish

Product no.	Pack of
CUBE10-M3	2
CUBE10-M4	2
CUBE10-M3-P	20
CUBE10-M4-P	20

- DXF/DWG/PDF/STP drawings available on our website.

- CUBE can also be used to make a simple housing by vertically aligning the plates.

Production example : Aluminium case

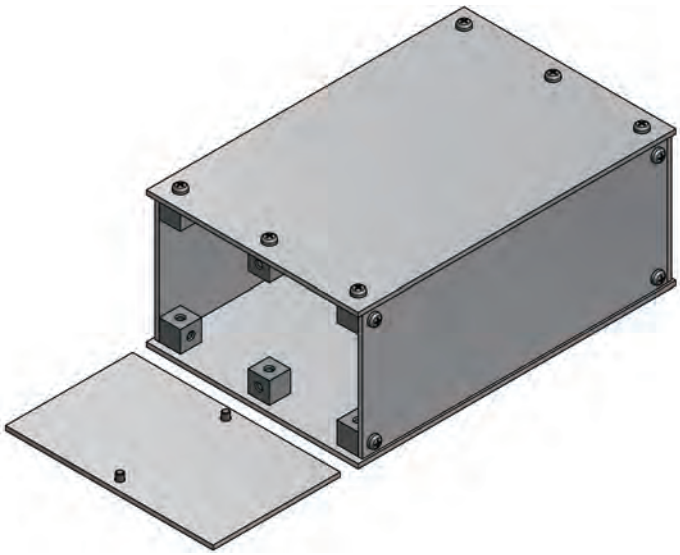

Production example : Acrylic case

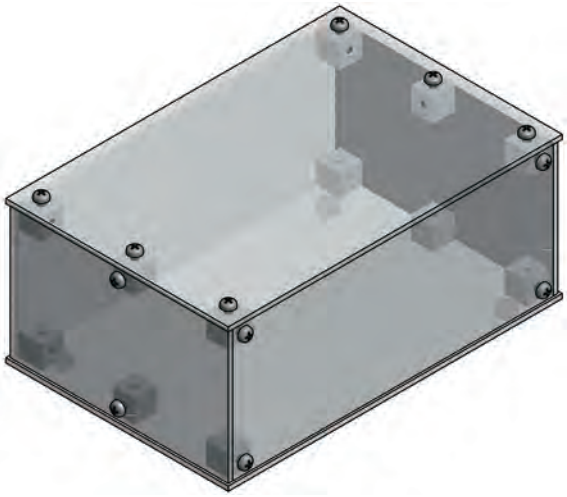

AST series INSERT NUT ADHESIVE STANDOFF

NEW

- Double-sided adhesive tape allows the standoff to be mounted quickly and easily; allows PCB mounting in non-boss enclosures.
- Convenient for installing PCBs into enclosures without the need for customization.
- Please ensure that surface is cleaned and grease-free before adhering.
- Once removed, it cannot be adhered on again.

AST dimensions

- DXF/DWG/PDF/STP drawings available on our website.

AST2.5-□

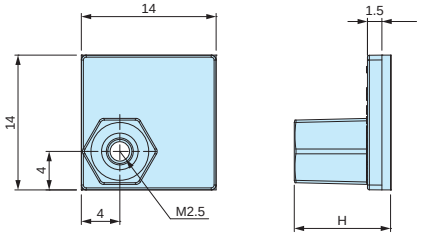

AST3-□

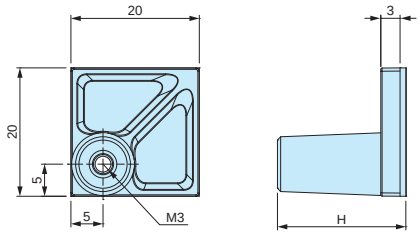

AST4-□

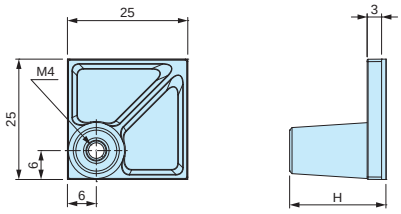

Product no. / Dimensions

Product no	H dimension	Included screw	Recommended PCB Thickness (mm)	Recommended torque (N • m)	Weight (g)	Pack of
AST2.5-5B	5	M2.5-5 pan head	1.0 ~ 2.0	0.3	0.6 (1 piece)	4
AST2.5-10B	10	M2.5-5 pan head	1.0 ~ 2.0	0.3	0.8 (1 piece)	4
AST3-6B	6	M3-6 pan head	1.0 ~ 3.0	0.4	1.5 (1 piece)	4
AST3-10B	10	M3-6 pan head	1.0 ~ 3.0	0.4	1.6 (1 piece)	4
AST3-15B	15	M3-6 pan head	1.0 ~ 3.0	0.4	1.8 (1 piece)	4
AST3-20B	20	M3-6 pan head	1.0 ~ 3.0	0.4	2.1 (1 piece)	4
AST4-10.5B	10.5	M4-8 pan head	1.0 ~ 3.5	0.8	2.6 (1 piece)	4
AST4-20B	20	M4-8 pan head	1.0 ~ 3.5	0.8	3.2 (1 piece)	4

Bulk package

Product no	Pack of
AST2.5-5B-P	100
AST2.5-10B-P	100
AST3-6B-P	100
AST3-10B-P	100
AST3-15B-P	100
AST3-20B-P	100
AST4-10.5B-P	50
AST4-20B-P	50

- Base material / color : Nylon 66 (UL94V-2) / Black
- Nut • screw material / finish : Steel / Trivalent chromate
- Bulk packaging is available. See "Bulk package" column above.
- Screws are not included for bulk packages.

ASR series ADHESIVE PCB STANDOFF

ASR dimensions

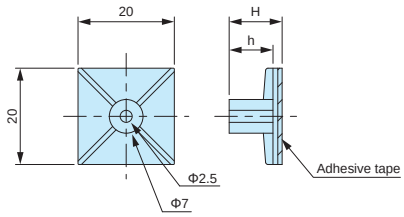

- DXF/DWG/PDF drawings available on our website.

Technical Data
Recommended torque : 0.4N • m

- M3 tapping screw use adhesive standoff. Recommended to be used with EM-3 or EM-3-6 self-tapping screws (See page 123).
- Please ensure that surface is cleaned and grease-free before adhering.
- Once removed, it cannot be adhered on again.

Product no. / Dimensions

Product no	H	h	Weight (g)	Pack of
ASR- 5	5.1	3.1	0.9 (1 piece)	10
ASR- 6	6.4	4.4	1.0 (1 piece)	10
ASR- 7	7.2	5.1	0.9 (1 piece)	10
ASR- 8	8.1	6.3	0.9 (1 piece)	10
ASR- 9	9	7	1.0 (1 piece)	10
ASR-11	11	9	1.0 (1 piece)	10
ASR-13	12.7	10.7	1.2 (1 piece)	10
ASR-14.5	14.7	12.8	1.1 (1 piece)	10
ASR-16	15.9	13.9	1.3 (1 piece)	10
ASR-19	19.1	17.1	1.4 (1 piece)	10

TPS series TAPPING STANDOFF

NEW SIZE

TPS dimensions

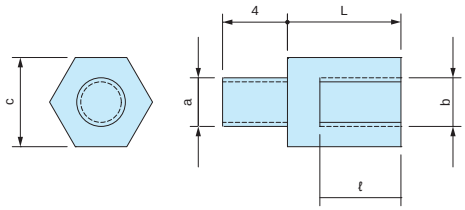

■ DXF/DWG/PDF drawings available on our website.

■ Tapping screw head allows for easy installation onto existing enclosure boss mount.

■ 4 different sizes available : M2.3, M2.6, M3 and M4 size.

Product no. / Dimensions

■ Material / Finish : Brass / Unfinished

Product no.	Screw size (a)	Screw size (b)	c	L	ℓ	Pack of	Suitable models
TPS-M2.3-4	M2.3	M2.3	5	4	3	4	WH series • PFE series LC • LCE • LCS • LCT series PF • PFF series (M2.3 boss models) TW • TWN • TWF series (M2.3 boss models) WP series (M2.3 boss models)
TPS-M2.3-5	M2.3	M2.3	5	5	3	4	
TPS-M2.3-6	M2.3	M2.3	5	6	4	4	
TPS-M2.3-7	M2.3	M2.3	5	7	5	4	
TPS-M2.3-8	M2.3	M2.3	5	8	6	4	
TPS-M2.3-10	M2.3	M2.3	5	10	6	4	
TPS-M2.3-12	M2.3	M2.3	5	12	6	4	
TPS-M2.6-4	M2.6	M2.6	5	4	3	4	PF • PFF series (M2.6 boss models) WP series (M2.6 boss models)
TPS-M2.6-5	M2.6	M2.6	5	5	3	4	
TPS-M2.6-7	M2.6	M2.6	5	7	5	4	
TPS-M2.6-10	M2.6	M2.6	5	10	6	4	
TPS-M2.6-12	M2.6	M2.6	5	12	6	4	
TPS-M3-4	M3	M3	5.5	4	3	4	TWS • TW • TWN • TWF series (M3 boss models)
TPS-M3-5	M3	M3	5.5	5	3	4	
TPS-M3-6	M3	M3	5.5	6	4	4	
TPS-M3-7	M3	M3	5.5	7	5	4	
TPS-M3-8	M3	M3	5.5	8	5	4	
TPS-M3-10	M3	M3	5.5	10	6	4	
TPS-M3-12	M3	M3	5.5	12	6	4	
NEW TPS-M4-6	M4	M4	7	6	4	4	BCAP • BCPC • BCPK • BCAR • BCPR series (M4 boss models)
NEW TPS-M4-10	M4	M4	7	10	6	4	
NEW TPS-M4-15	M4	M4	7	15	8	4	
NEW TPS-M4-20	M4	M4	7	20	10	4	

■ Please use a suitable sized socket driver to both secure and loosen the tapping standoff.

MT series PCB MOUNTING SCREWS for TPS

Pan head

■ PCB mounting Screws for TPS tapping standoffs

Product no. / Dimensions

Product no.	M	L	Head style	Material	Finish	Pack of
MT2.3-4	2.3	4	Pan	Steel	Trivalent chromate	20
MT2.3-6	2.3	6		Steel	Trivalent chromate	20
MT2.6-4	2.6	4		Steel	Trivalent chromate	20
MT3-4	3	4		Steel	Trivalent chromate	20

EM series PCB MOUNTING SCREW

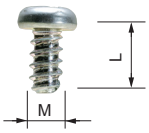

- Self-tapping screws for mounting PCB on bosses or standoffs.
- EM-3-6 self-tapping screws are suitable for mounting 1.6mm or thicker PCB.

Product no. / Dimensions

Product no.	M	L	Material	Finish	Suitable models	Pack of
EM-1.6	1.6	4	Steel	Trivalent chromate	CSS • CS WC • PS (M1.6 boss models)	50
EM-2	2	5	Steel	Trivalent chromate	SIC • SIM • WC • PS • TW • TWN • TWF PF • WC • WP (M2 boss models)	50
EM-2.3	2.3	6	Steel	Trivalent chromate	WH • LC • LCT • LCS • LCE • PFE WSC (Top cover bosses) PF • PFF (M2.3 boss models) TW • TWN • TWF (M2.3 boss models) WP (M2.3 boss models)	50
EM-2.3-8	2.3	8	Steel	Trivalent chromate	WSC (Bottom base bosses)	50
EM-2.6	2.6	6	Steel	Trivalent chromate	PF • PFF • WP (M2.6 boss models)	50
EM-3	3	5	Steel	Trivalent chromate	TWS • TW • TWN • TWF (M3 boss models)	50
EM-3-6	3	6	Steel	Trivalent chromate		50

MR series TORX SCREW

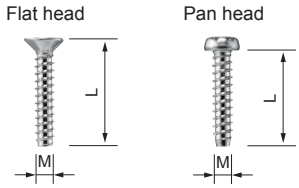

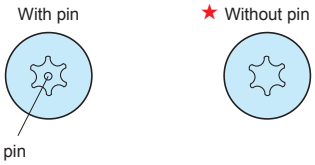

- Self-tapping torx screws for securing of the enclosure.

★ : MR1.6-6S, MR-2S, MR2.6-10□, and MR3-14□ are without pin.

Product no. / Dimensions

★Mark = Without pin

Product no.	M	L	head no.	Head style	Material	Finish	Suitable models	Pack of
MR1.6-6S★	1.6	6	T3	Pan	Steel	Nickel plated	CSS • CS	20
MR2.5-8PS	2.5	8	T8	Pan	Steel	Nickel plated	PF • PFE • PFF (M2.5 size)	20
MR2.6-10S★	2.6	10	T8	Flat	Steel	Nickel plated	TW • TWN (M2.6 size) TWF (M2.6 size) MX • MXA • MXB • MXF (M2.6 size)	20
MR2.6-10B★	2.6	10	T8	Flat	Steel	Black trivalent chromate		20
MR2.6-12PS	2.6	12	T8	Pan	Steel	Nickel plated	LCT • LCS • LC115-F2 / F3 LCT • LCS • LC145S-F6	20
MR2.6-14PS	2.6	14	T8	Pan	Steel	Nickel plated	LCT • LCS • LC115H-F2 / F3 / M2 / 9V LCT • LCS • LC135-F4 / M2 / M3 / 9V LCT • LCS • LC135H-F4 / M2 / M3 / 9V LCT • LCS • LC145-F6 / M2 / M4 LCT • LCS • LC145H-F6 / M2 / M4 LCT • LCS • LC165-M4 LCT • LCS • LC165H-M4	20
MR2.6-14S	2.6	14	T8	Flat	Steel	Nickel plated	LCT • LCS • LC115-N / F2 / F3 LCT • LCS • LC145S-F6 / 145S-N LCE115-N TW • TWN7-2-11 / 7-4-11 / 7-5-11 TWF7-2-11 / 7-4-11 / 7-5-11 / 8-2-8 / 8-4-8	20
MR2.6-18S	2.6	18	T8	Flat	Steel	Nickel plated	LCT • LCS • LC115H-N / F2 / F3 / M2 / 9V LCT • LCS • LC135-N / F4 / M2 / M3 / 9V LCT • LCS • LC135H-N / F4 / M2 / M3 / 9V LCT • LCS • LC145-N / F6 / M2 / M4 LCT • LCS • LC145H-N / F6 / M2 / M4 LCT • LCS • LC165-N / M4 LCT • LCS • LC165H-N / M4 LCE115H-N • LCE135-N • LCE145H-N • LCE165H-N	20
MR3-8PS	3	8	T10	Pan	Steel	Nickel plated	PF • PFE • PFF (M3 size)	20
MR3-14S★	3	14	T10	Flat	Steel	Nickel plated	TW • TWN (M3 size) TWF (M3 size) MX • MXA • MXB • MXF (M3 size)	20
MR3-14B★	3	14	T10	Flat	Steel	Black trivalent chromate		20
MR-1S	3	5	T10	Flat	Steel	Nickel plated	UC	20
MR-1B	3	5	T10	Flat	Steel	Black trivalent chromate		20

CR2•CR123A-PC series LITHIUM BATTERY HOLDER

■ DXF/DWG/PDF drawings available on our website.

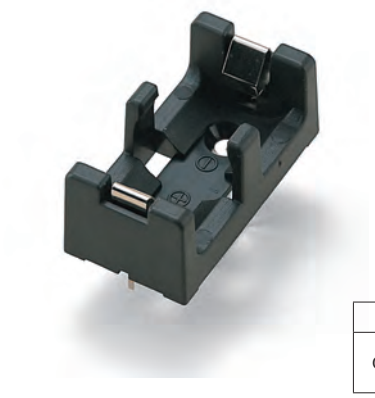

Technical Data
Operating temperature: -10°C ~ +60°C

Components

Holder material	Holder color	Contact material	Contact finish
ABS UL94V-0	Black	Phosphor bronze	Nickel plated

Product no. / Feature

Product no.	Battery	Mounting	Weight (g)
CR2-PC	CR2×1	Through-hole mount pin x 2	4.3
CR123A-PC	CR123A×1	Through-hole mount pin x 2	5.0

CR2-PC dimensions

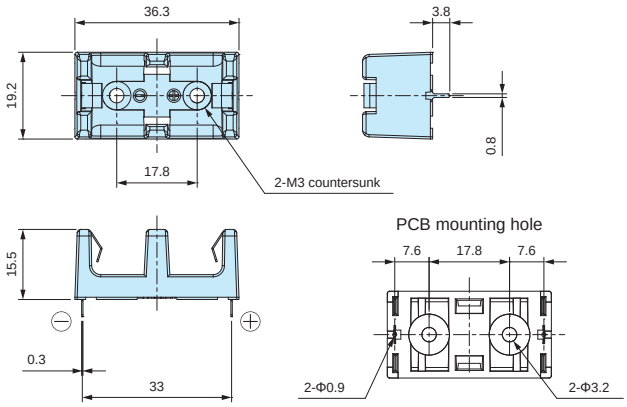

CR123A-PC dimensions

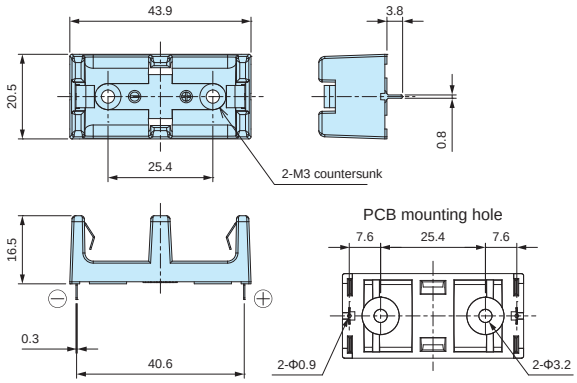

Caution

■ Please remove the battery from the positive (+) side. Removing it from the negative (-) side may damage the battery or the battery contacts.

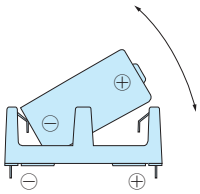

CR2•CR123A-R series LITHIUM BATTERY HOLDER with LEAD WIRE

■ DXF/DWG/PDF drawings available on our website.

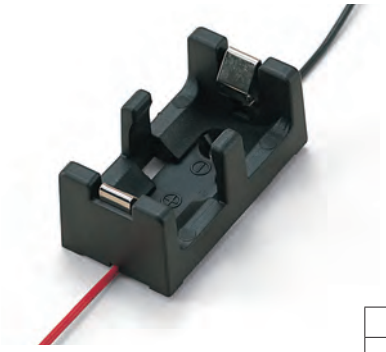

Technical Data
Operating temperature: -10°C ~ +60°C

Components

Holder material	Holder color	Contact material	Contact finish
ABS UL94V-0	Black	Phosphor bronze	Nickel plated

Product no. / Feature

Product no.	Battery	Lead wire	Weight (g)
CR2-R	CR2×1	UL1007 AWG26 L=140	5.3
CR123A-R	CR123A×1	UL1007 AWG26 L=140	6.0

CR2-R dimensions

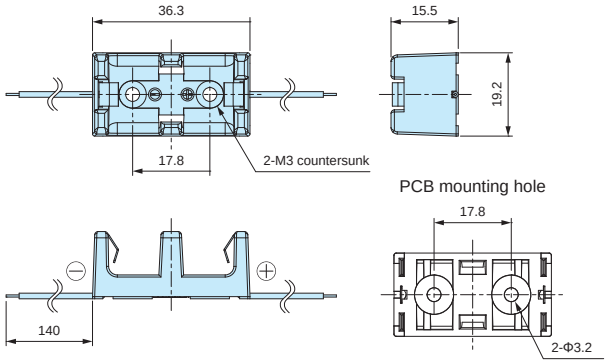

CR123A-R dimensions

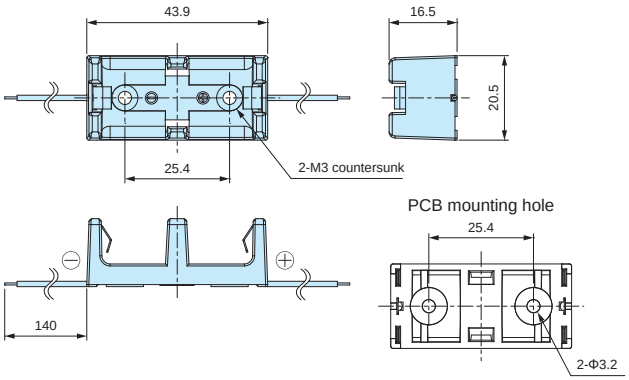

BC series EMBEDDED BATTERY BOX

NEW

Technical Data
Operating temperature: -10°C ~ +60°C

Mount Example

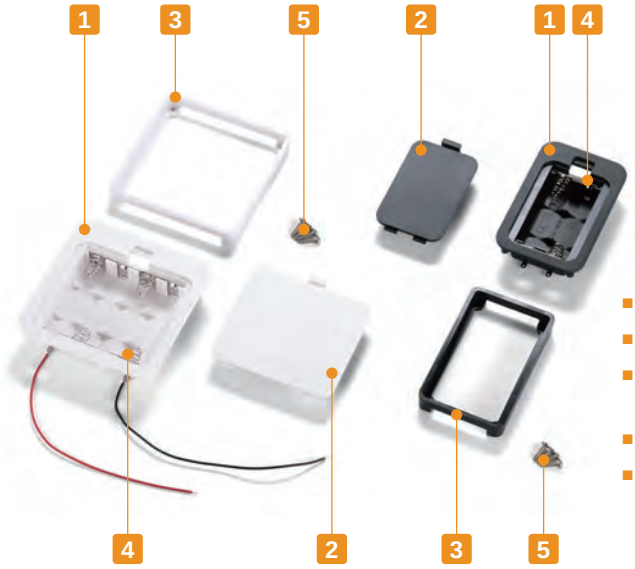

- Suitable to be installed into enclosures with material thickness of 1.0mm to 3.5mm.
- Cover can be opened/closed without any tool for easy battery replacement.
- 5 different battery layouts are available as AA x 2, AA x 3, AA x 4, AAA x 2 and AAA x4. Each layout comes in 2 models: with lead-wire, and without lead-wire.
- ⊕⊖markings prevents incorrect placement of battery.
- The dimensions of alkaline or manganese batteries may vary depending on country and brand. Use optional battery cushion sponge to preventing rattling.

Components

No.	Part name	Pcs	Material	Color / Finish
1	Box	1	ABS UL94V-0	Black • Off-white
2	Cover	1	ABS UL94V-0	Black • Off-white
3	Frame	1	ABS UL94V-0	Black • Off-white
4	Battery contact Lead wire (BC-L models)	1 set	Battery contact : Brass & steel wire Lead wire : PVC + Copper wire (UL1007 AWG26)	Nickel plated Black • Red
5	Self-tapping screw	4	Steel	Nickel plated

BC dimensions

- DXF/DWG/PDF/STP drawings available on our website.
- The shape and position of battery contacts vary by models.

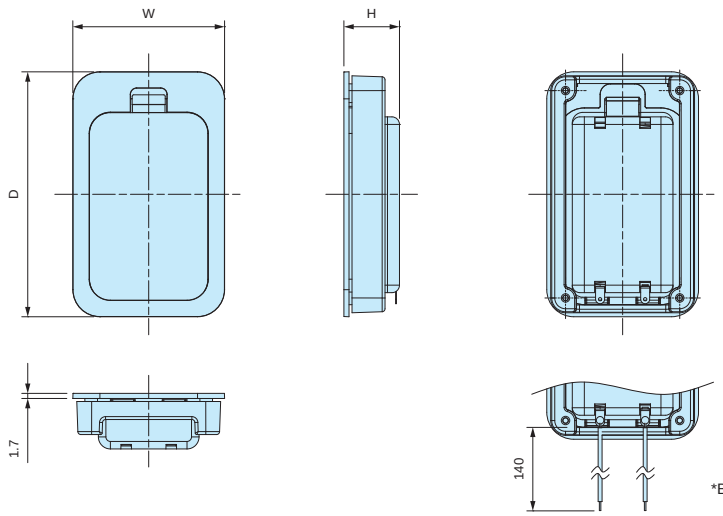

Back side of box

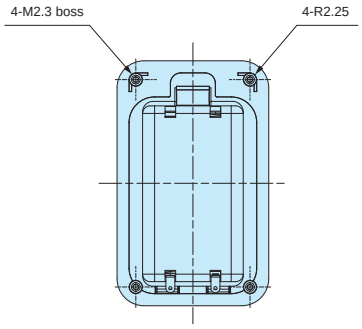

*Battery contact with lead wire for BC4-□L and BC3-□L models.

Hole layout
for mounting

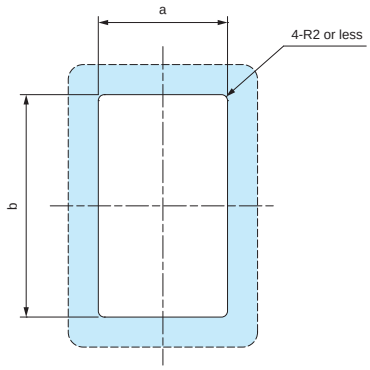

Suitable to be installed into enclosures with material thickness of 1.0mm to 3.5mm.

Type: Without Lead Wire

Product no. / Dimensions

Product no.		Dimensions					Battery layout	Weight (g)
● Black	● Off-white	W	H	D	a	b		
BC4-2-B	BC4-2-W	40	14.8	78.5	32.5	71	*AAA x 2	24.5
BC4-4-B	BC4-4-W	62	14.8	78.5	54.5	71	*AAA x 4	34.5
BC3-2-B	BC3-2-W	50.5	18.5	81.5	43	74	*AA x 2	31.5
BC3-3-B	BC3-3-W	65.5	18.5	81.5	58	74	*AA x 3	39
BC3-4-B	BC3-4-W	80.5	18.5	81.5	73	74	*AA x 4	46

*Alkaline or manganese batteries

Type: With Lead Wire

Product no. / Dimensions

Product no.		Dimensions					Battery layout	Weight (g)
● Black	● Off-white	W	H	D	a	b		
BC4-2L-B	BC4-2L-W	40	14.8	78.5	32.5	71	*AAA x 2	25.5
BC4-4L-B	BC4-4L-W	62	14.8	78.5	54.5	71	*AAA x 4	35.5
BC3-2L-B	BC3-2L-W	50.5	18.5	81.5	43	74	*AA x 2	32.5
BC3-3L-B	BC3-3L-W	65.5	18.5	81.5	58	74	*AA x 3	40
BC3-4L-B	BC3-4L-W	80.5	18.5	81.5	73	74	*AA x 4	47

*Alkaline or manganese batteries

How to mount on the enclosures

■ Insert battery box into the milled hole first, and fit the frame on the back side. Once mounted, secure the frame with screws.

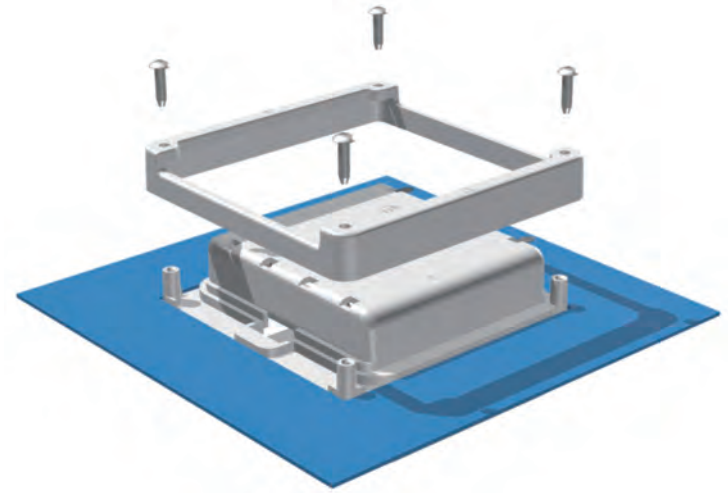

■ For BC3-4□ models, ▷ markings are shown on the frame. Install by matching the markings.

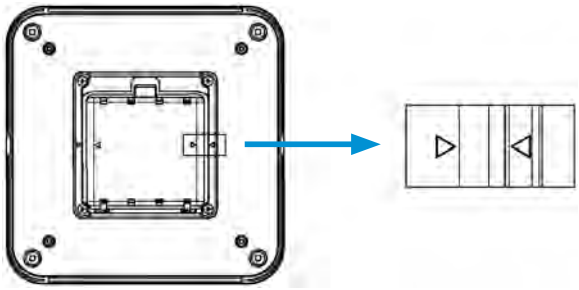

Parallel circuit conversion on BC series battery box

■ BC-3□ models can be converted from a series to a parallel circuit. See below illustration for further details.

■ IT series (IT-3 models) optional battery contacts can be used for parallel circuit conversion. (See website for more information)

■ Use caution when installing or replacing the terminals to avoid the damage to the material.

■ Parallel series conversion is available via our customization services.

Conversion Example

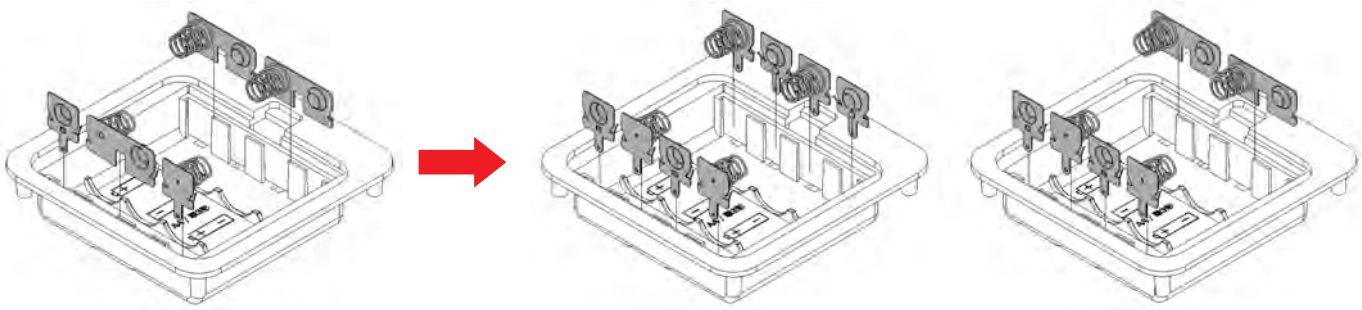

Series Circuit (Standard) | Parallel Circuit (4 batteries) | Parallel Circuit (2 batteries x 2)

Customization Available

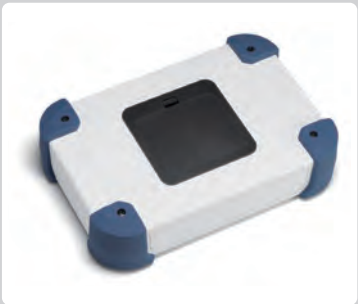

For more information, contact us here:

Online form: https://www.takachi-enclosure.com/custom/form_custom
E-mail : sales@takachi-el.co.jp

Mount Example

■ BC series battery boxes can also be mounted on aluminium enclosures.

Raspberry Pi 4B HEAT-SINK ALUMINIUM CASE

Made with Aluminium Diecast material for Excellent Heat Dissipation and Rigidity

Exceptional Functionality with Superb Cost Efficiency!

RPH series

3 different types are available: Desktop, Flanged and DIN Rail

Desktop type
RPH-4B

Available in metallic silver and black for Raspberry Pi 4 Model B

Flanged type
RPH-4B-F

Compatible with VESA Mount Standards (75 x 75mm / 100 x 100mm), and can be installed on the back side of PC displays, etc.

DIN Rail type
RPHD-4B

Available with DIN rail mounting bracket. Perfect for mounting on control panels or switchboards.

Efficient Heat Dissipation Construct to Maximize your Raspberry Pi Performance!

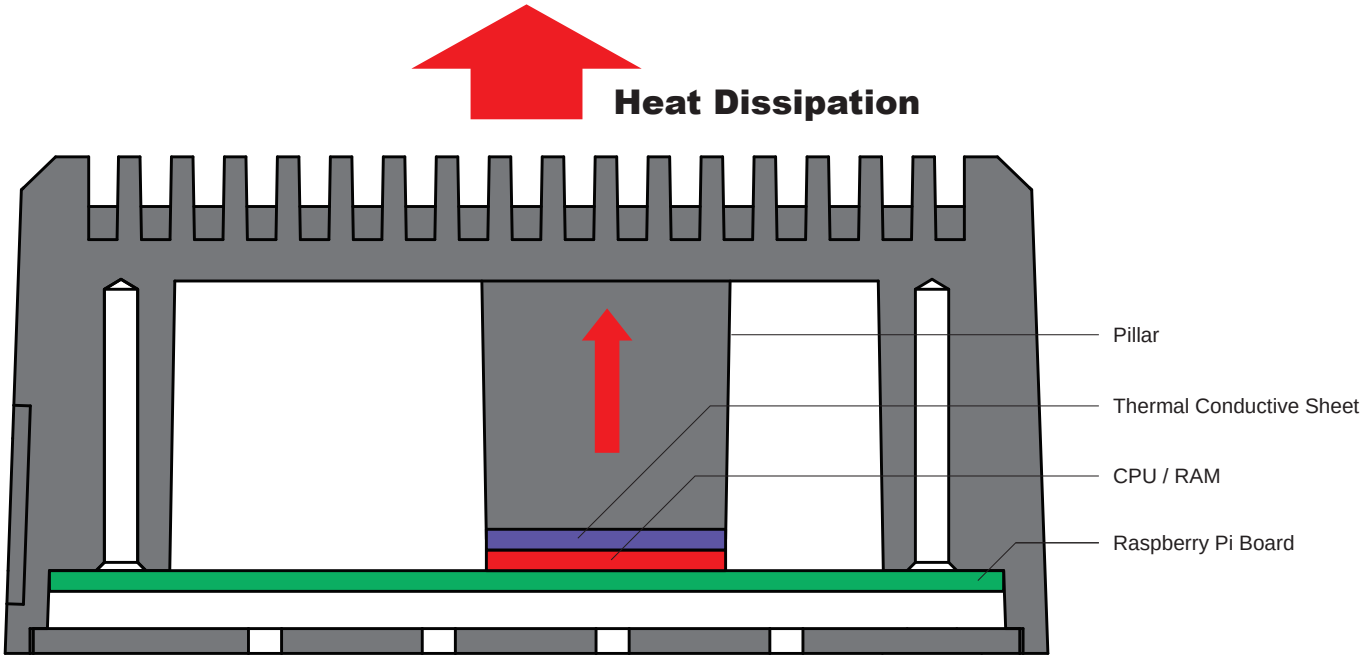

■ Attach thermal conductive sheet onto CPU and RAM. Heat is transferred to the heat-sink cover through the pillar.

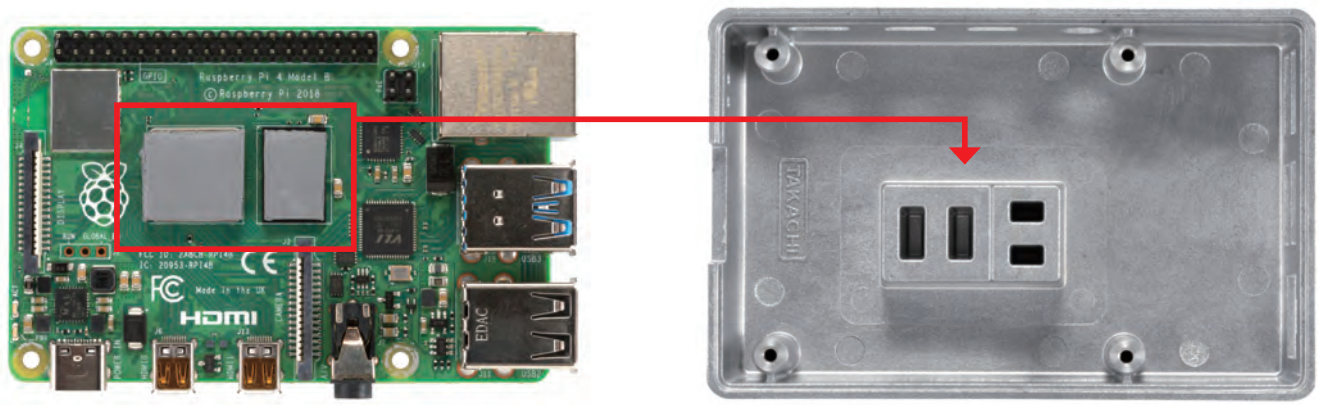

2 different Heat dissipation and Normal are available.

RPH-4B-H (Heat dissipation)

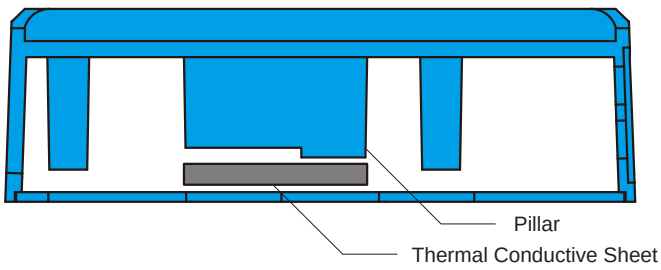

RPH-4B-N (Normal)

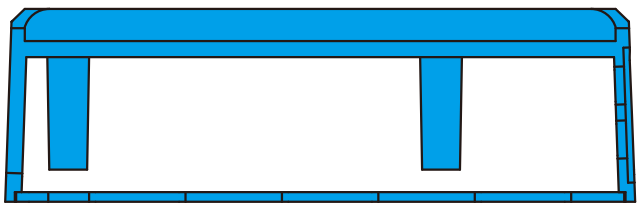

RPH series Raspberry Pi 4B HEAT-SINK ALUMINIUM CASE

NEW

Heat Resistant

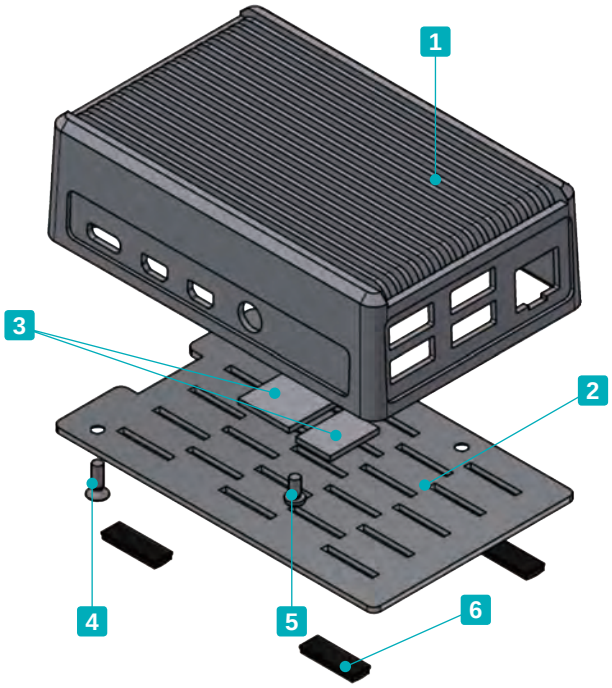

Heat Dissipation

Normal

- Heat-sink top cover case exclusively for use with the Raspberry Pi 4 Model B. Equipped with highly efficient heat-sink top cover.
- Constructed using diecast aluminium for strength and rigidity.
- 2 different Desktop and Flanged wall mount are available. Flanged wall mount type is compatible with VESA Mount Standards, (75 x 75mm / 100 x 100mm), and can be installed on the back side of PC displays, etc.

- Raspberry Pi board is not included.

Components

No.	Part name	Pcs	Material	Color / Finish
1	Top cover	1	Diecast aluminium ADC12	Silver • Black / Powder coated
2	Base	1	Aluminium A1100P t=1.5	Metallic silver / Painted (Conductive inside) • Black / Painted
3	Thermal conductive sheet (H type only)	2	Silicone polymer + Ceramic composite	Gray
4	Screw (M2.5-10 flat head)	2	Steel	Trivalent chromate • Black trivalent chromate
5	Screw for Board (M2.5-4 pan head)	2	Steel	Trivalent chromate
6	Rubber feet *	4	Polyurethane	Black

* Not applicable to flanged models.

RPH dimensions

■ DXF/DWG/PDF/STP drawings available on our website.

RPH-4B-H, RPH-4B-N (Desktop)

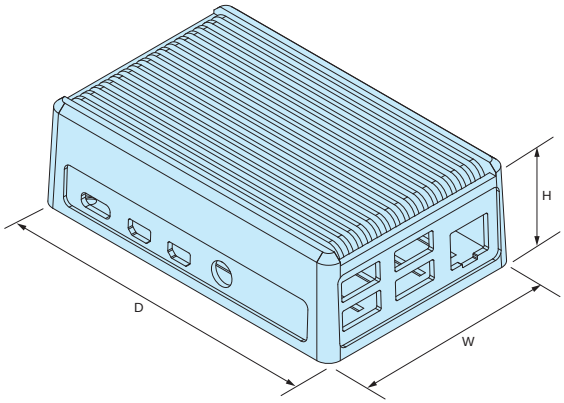

RPH-4B-FH, RPH-4B-FN (Flanged)

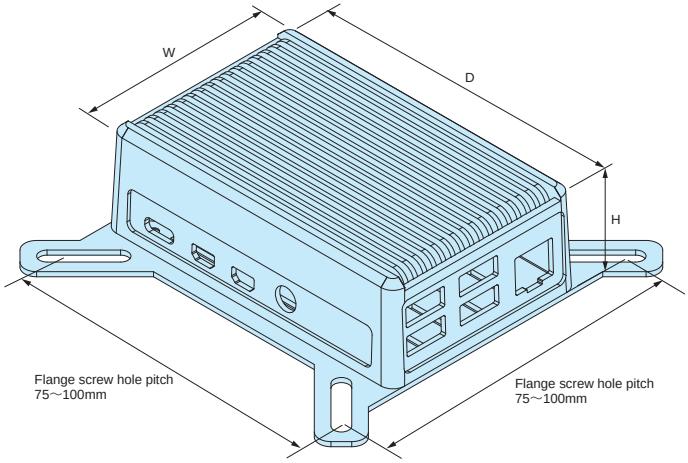

Product no. / Dimensions

Product no.		External dimensions			Type	Included accessory	※Thermal resistance rate (°C/W)	Weight (g)
● Silver	● Black	W	H	D				
RPH-4B-H-S	RPH-4B-H-B	63	30	98	Desktop Heat dissipation	Rubber feet Thermal conductive sheets	7.31	159.9
RPH-4B-N-S	RPH-4B-N-B	63	30	98	Desktop Normal	Rubber feet	7.31	142
RPH-4B-FH-S	RPH-4B-FH-B	63	31.5	98	Flanged Heat dissipation	Thermal conductive sheets	7.31	168.2
RPH-4B-FN-S	RPH-4B-FN-B	63	31.5	98	Flanged Normal	–	7.31	150.3

※ Thermal resistance test condition
- Ambient air cooling.
- Heat-sink fins are set perpendicular to the ground with temperature at 60°C.
- Powder coated aluminium diecast.
- Heat source is applied on the opposite side (inner side) of the fins.

Temperature measurement test

Raspberry Pi board is placed into the RPH-4B-H model and a commercially available Raspberry Pi plastic case.
Temperature is measured after 6 hours of continuous operation.
*Results will vary depending on usage period and environment. Listed values are in-house test reference values only.

RPH-4B-H
CPU Temperature : 45.7°C

Plastic case
CPU Temperature : 58.4°C

RPI series Raspberry Pi ALUMINIUM CASE

Conductive

Two Raspberry Pi boards can be installed into the RPI-2 and RPI-4B-2 models.

RPI-1F and RPI-4B-1F models are compatible with VESA Mount Standards (75 x 75mm / 100 x 100mm), and can be installed on the back side of PC displays, etc.

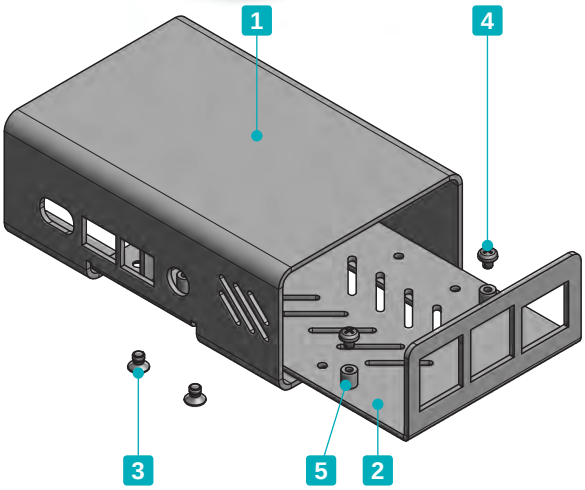

- Compatible with Raspberry Pi 2B, 3B, 3B+ and 4B boards.
- All aluminium, polished and elegant metallic silver finish.
- 3 different Single desktop, Dual desktop, and Single flanged are available.
- Conductive internal surface.

- Raspberry Pi Board is not included.

Components

No.	Part name	Pcs	Material	Color / Finish
1	Cover	1	Aluminium A1100P t=1.5	Metallic silver / Painted (Conductive inside)
2	Base	1	Aluminium A1100P t=1.5	Metallic silver / Painted (Conductive inside)
3	Screw (M3-4 flat head)	4	Steel	Trivalent chromate
4	Screw for Board (M2.5-4 pan head)	4	Steel	Trivalent chromate
5	Clinching standoff	4	Steel	Galvanized trivalent

RPI dimensions

■ DXF/DWG/PDF/STP drawings available on our website.

RPI-1, RPI-4B-1 (Single)

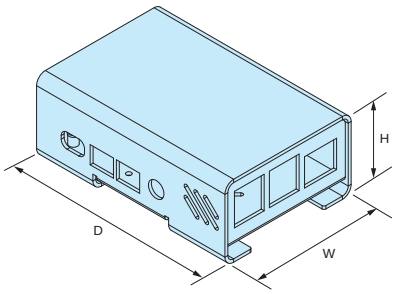

RPI-2, RPI-4B-2 (Dual)

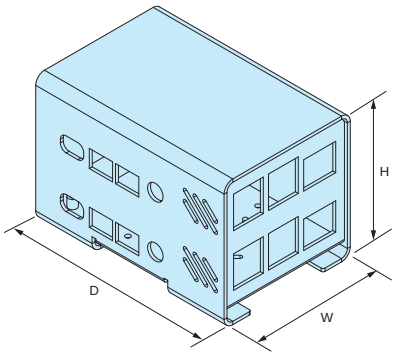

RPI-1F, RPI-4B-1F (Flanged)

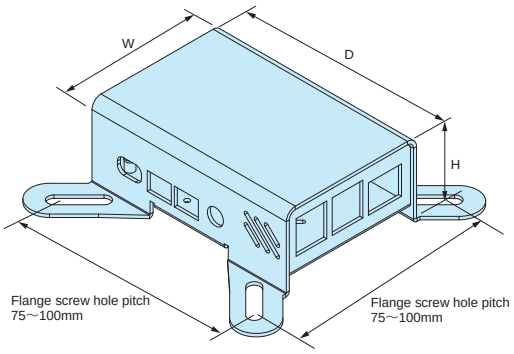

Product no. / Dimensions

Product no.	External dimensions			Type	Included accessory	Compatible board	Weight (g)
	W	H	D				
RPI-1	65	37	95	Single desktop	Rubber feet	Raspberry Pi 2B/3B/3B+	90.5
RPI-4B-1	65	37	97	Single desktop	Rubber feet	Raspberry Pi 4B	91.5
RPI-2	65	65	95	Dual desktop	Rubber feet Hexagonal spacer (M2.5-25)	Raspberry Pi 2B/3B/3B+	136
RPI-4B-2	65	65	97	Dual desktop	Rubber feet Hexagonal spacer (M2.5-25)	Raspberry Pi 4B	138.8
RPI-1F	65	37	95	Single flanged	–	Raspberry Pi 2B/3B/3B+	91.5
RPI-4B-1F	65	37	97	Single flanged	–	Raspberry Pi 4B	93.8

■ Rubber feet・・・Synthetic rubber / Black Hexagonal spacer・・・Brass / Nickel plated

Raspberry Pi Case Customization

Unique Logo (Inkjet print, Engraving)

See page Custom-1 ~ Custom-4, Custom-8, as well as our website for further details.

Various print processing methods are available, with no Minimum Order Quantity requirement!

Color Anodization • Painting

See page Custom-12, as well as our website for further details.

RPA series Raspberry Pi 4B ACRYLIC CASE

NEW

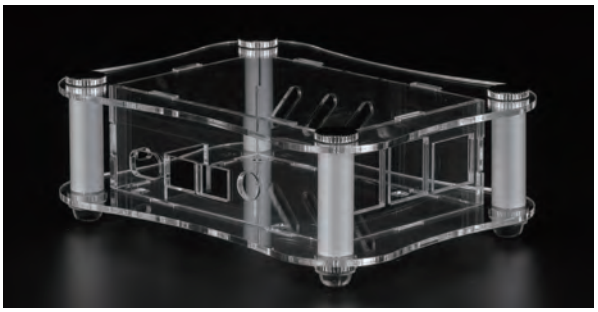

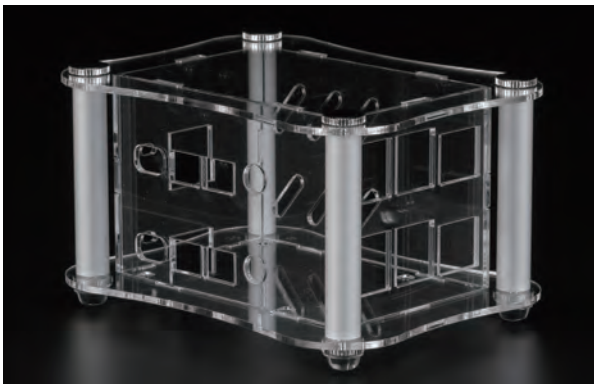

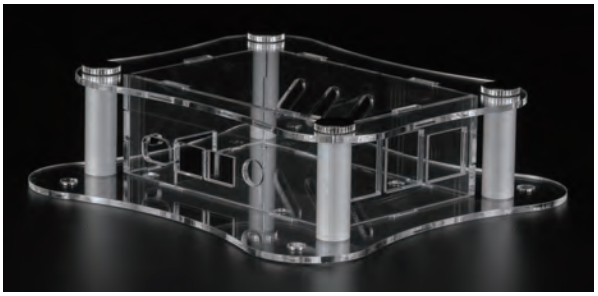

RPA-4B-1F is compatible with VESA Mount Standards (100 x 100mm), and can be installed on the back side of PC displays, etc.

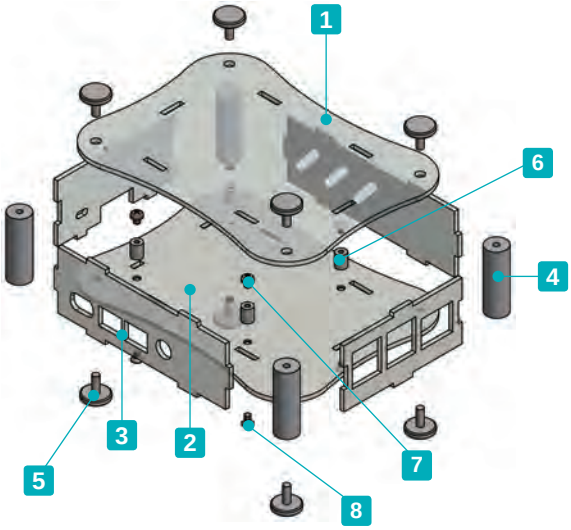

- Exclusively for use with Raspberry Pi 4B models.
- 3 different Single desktop, Dual desktop, and Single flanged are available.

- Raspberry Pi board is not included.

※Ethanol or other alcoholic solvents may cause the acrylic panel to crack.
Use a neutral cleaner or specialized acrylic cleaning solvent for cleaning.

※Included screws : RPA-4B-1 Knurled thumb screw x 8
RPA-4B-2 Knurled thumb screw x 8
RPA-4B-1F Knurled thumb screw x 4
M3-8 flat head, Trivalent chromate x 4

Components

No.	Part name	Pcs	Material	Color / Finish
1	Top cover	1	Acrylic t=2.0	Transparent
2	Bottom cover	1	Acrylic t=2.0	Transparent
3	Panel	4	Acrylic t=2.0	Transparent
4	Pillar	4	Extruded aluminium A6063S-T5	Silver / Anodized with clear coating
5	Knurled thumb screw (M3-8)※	4 / 8	Brass	Nickel plated
6	Standoff (for board)	4	Brass	Nickel plated
7	Screw for Board (M2.5-4 pan head)	4	Steel	Trivalent chromate
8	Screw for Standoffs (M2.5-5 flat head)	4	Steel	Trivalent chromate

RPA dimensions

■ DXF/DWG/PDF/STP drawings available on our website.

RPA-4B-1 (Single desktop)

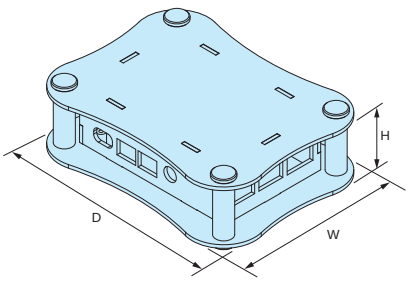

RPA-4B-2 (Dual desktop)

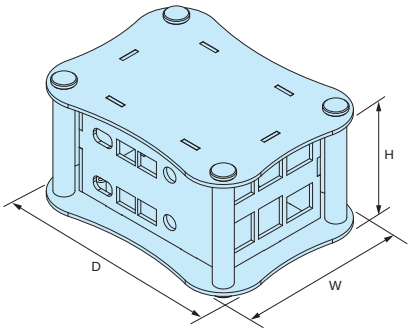

RPA-4B-1F (Single flanged)

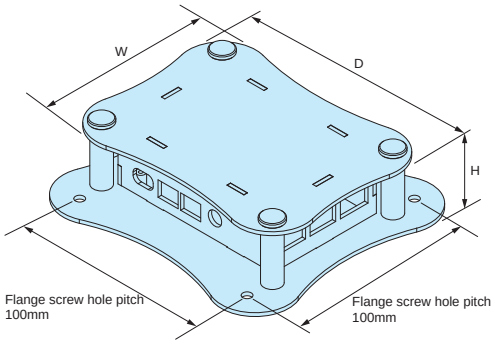

Product no. / Dimensions

Product no.	External dimensions			Type	Included accessory	Weight (g)
	W	H	D			
RPA-4B-1	95	34	125	Single desktop	Rubber feet	118
RPA-4B-2	95	62	125	Dual desktop	Rubber feet Round spacer (M2.5-25)	171.5
RPA-4B-1F	95	34	125	Single flanged	–	118.5

■ Rubber feet・・・Polyurethane / Transparent Round spacer・・・Brass / Nickel plated

Raspberry Pi Case Customization

Unique Logo (Inkjet print, Engraving)
See page Custom-1 ~ Custom-4, Custom-8, as well as our website for further details.

Various print processing methods are available, with no Minimum Order Quantity requirement!

Color Variation

Available in different color types, as well as smoked / tinted shades.

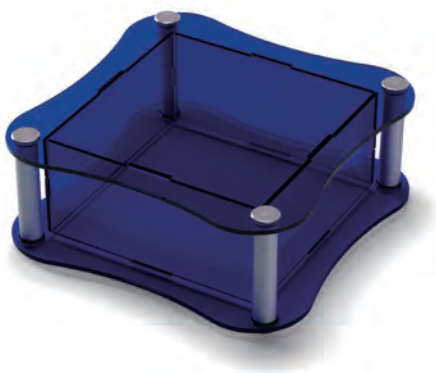

RPHD series DIN RAIL MOUNT Raspberry Pi HEAT-SINK CASE

NEW

Heat Resistant

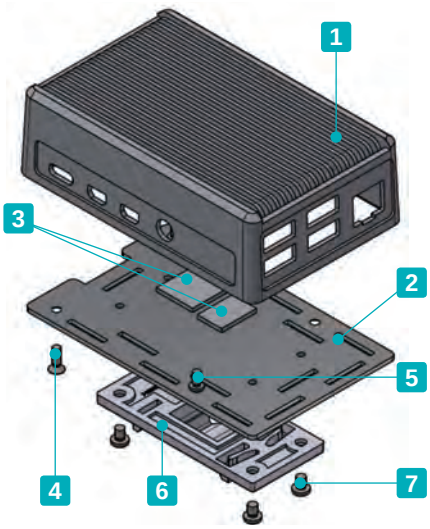

Heat Dissipation

Normal

- DIN rail mount heat-sink case exclusively for use with the Raspberry Pi 4B. Equipped with highly efficient heat-sink top cover.
- Constructed using diecast aluminium for strength and rigidity.
- 2 different Heat dissipation and Normal are available.

- Raspberry Pi board is not included.

Technical Data
Max load : 300g Operating Temperature : -20°C ~ +80°C

Components

No.	Part name	Pcs	Material	Color / Finish
1	Top cover	1	Diecast aluminium ADC12	Silver / Powder coated
2	Base	1	Aluminium A1100P t=1.5	Metallic silver / Painted (Conductive inside)
3	Thermal conductive sheet (H type only)	2	Silicone polymer + Ceramic composite	Gray
4	Screw (M2.5-10 flat head)	2	Steel	Trivalent chromate
5	Screw for Board (M2.5-4 pan head)	2	Steel	Trivalent chromate
6	Din-rail mounting base	1	PC • ABS UL94V-0	Light gray
7	Screw for Din-rail mounting base (M3-3 pan head)	4	Steel	Trivalent chromate

RPHD dimensions

■ DXF/DWG/PDF/STP drawings available on our website.

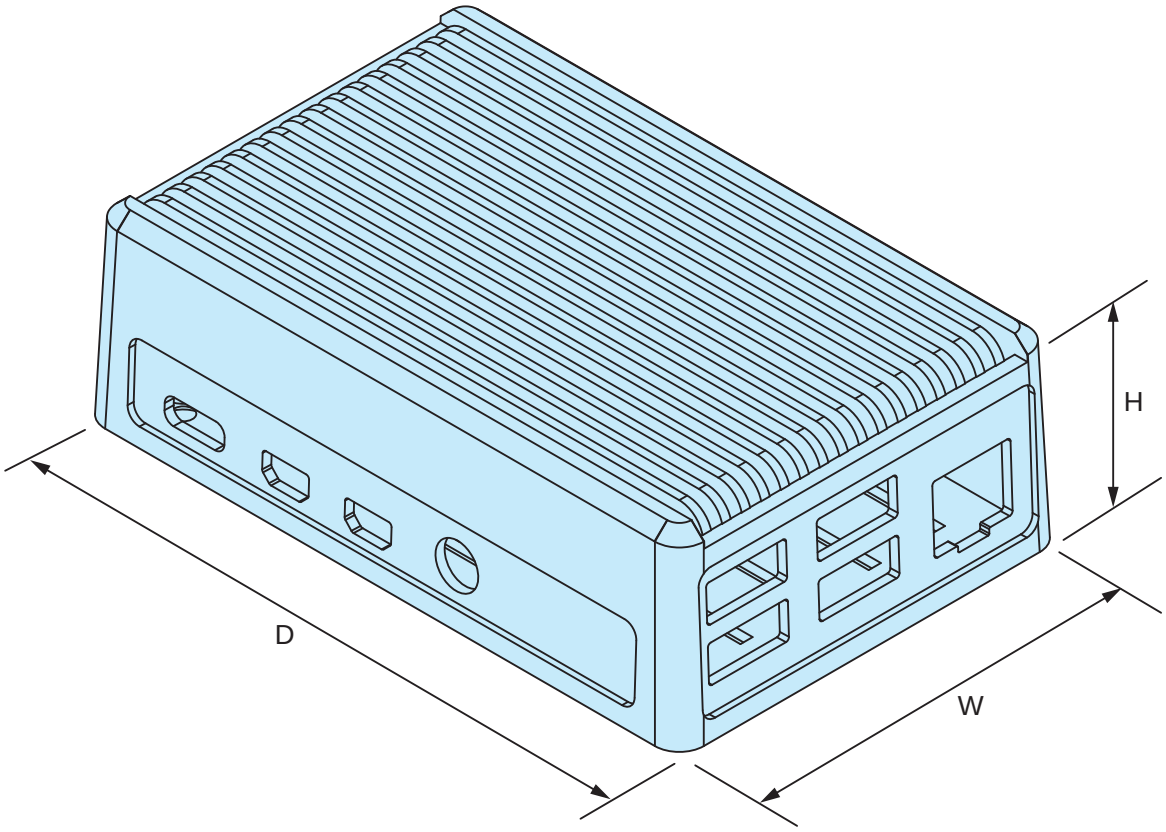

■ 2 different Heat Dissipation and Normal are available.

RPHD-4B-H (Heat dissipation)

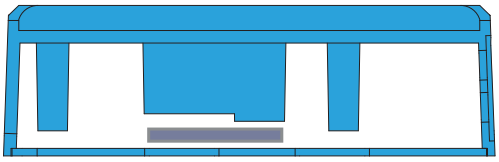

RPHD-4B-N (Normal)

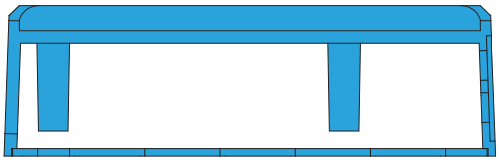

Product no. / Dimensions

*Din-rail mounting base height is not included in H dimension.

Product no.	External dimensions			Pillar Thermal conductive sheets	※Thermal resistance rate (°C/W)	Weight (g)
	W	H	D			
RPHD-4B-H-S	63	30	98	○	7.31	168.2
RPHD-4B-N-S	63	30	98	×	7.31	150.7

※Thermal resistance test condition
- Ambient air cooling.
- Heat-sink fins are set perpendicular to the ground with temperature at 60°C.
- Powder coated aluminium diecast.
- Heat source is applied on the opposite side (inner side) of the fins.

RPCB-4B EXPANSION PCB for Raspberry Pi 4B

NEW

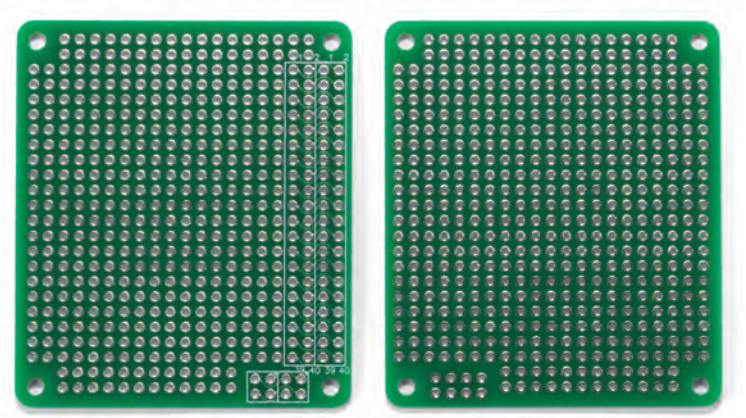

Installation example

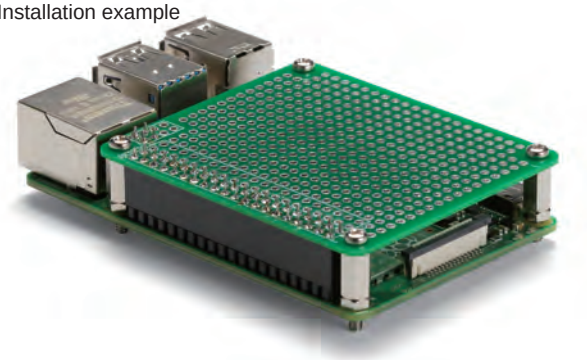

- Raspberry Pi Board is not included.
- Connector, spacer, and mounting screw set are sold separately.

- Material / Finish : Glass epoxy (FR-4) / Through-hole - Lead-free solder resist

- Expansion PCB for standard Raspberry Pi 4B boards. Use to install expansion parts or components.
- Environmentally friendly lead-free solder. RoHS3 compliant.

RPCB-4B dimensions

- DXF/DWG/PDF drawings available on our website.

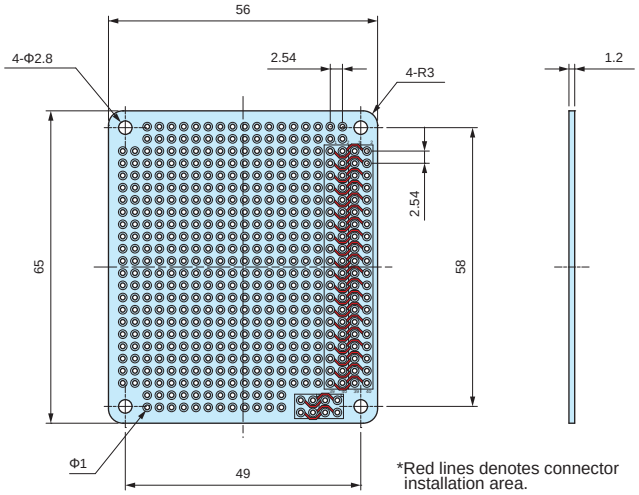

*Red lines denotes connector installation area.

Product no.

Product no.	Pack of
RPCB-4B	1

- Expansion PCB can also be utilized on RPI-4B and RPA series cases.
  See page 132 ~ 134 for RPI series case and page 135 ~ 136 for RPA series case.

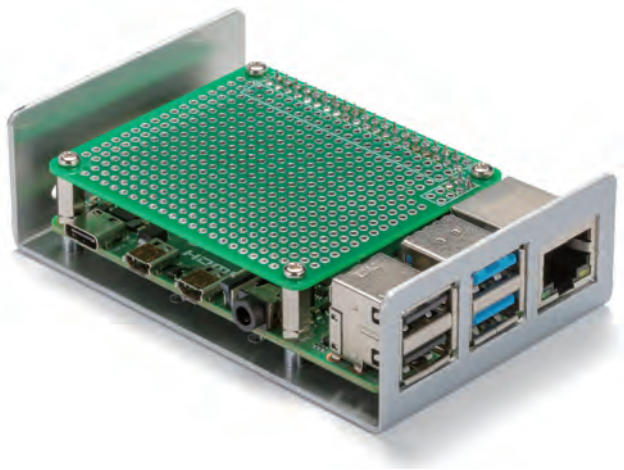

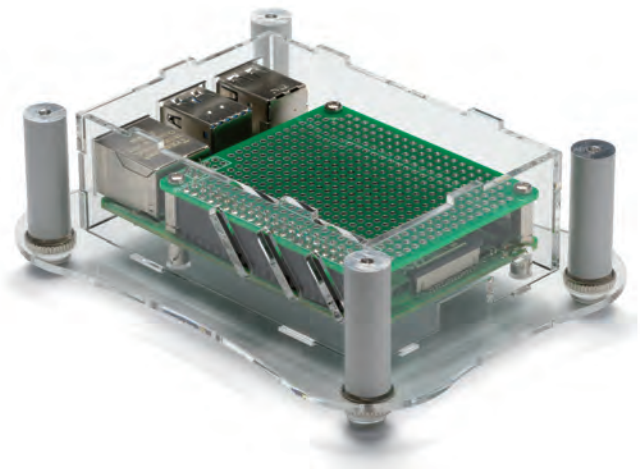

RPS series PIN SOCKET CONNECTOR for RPCB-4B

NEW

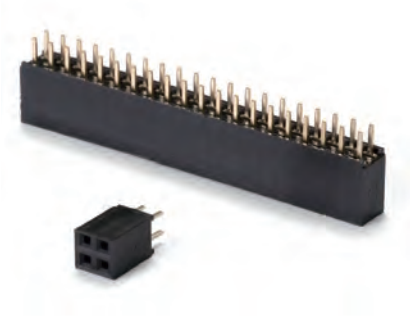

RPS dimensions

■ DXF/DWG/PDF drawings available on our website.

RPS2-2

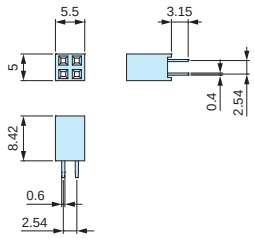

RPS2-20

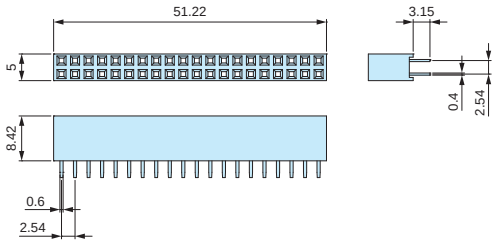

■ Material / Color : (Socket) FRPBT UL94V-0 /Black • (Pin) Phosphor bronze

■ 2.54mm hole-to-hole pitch pin socket connector.
Utilize with RPCB-4B expansion PCB for Raspberry Pi 4B.

Product no.

Product no.	Pin layout	Pack of
RPS2-2	4 (2 pin x 2)	1
RPS2-20	40 (20 pin x 2)	1

RPSP2.5-11 HEXAGONAL SPACER

NEW

RPSP2.5-11 dimensions

■ DXF/DWG/PDF drawings available on our website.

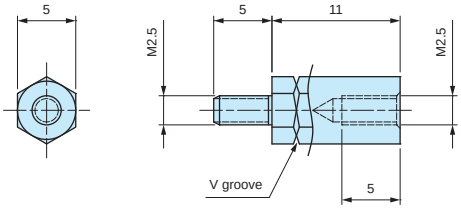

■ Material / Finish : Brass / Nickel plated

■ Brass hexagonal spacer with M2.5 threads on both male and female sides.
Utilize with RPCB-4B expansion PCB for Raspberry Pi 4B.

Product no.

Product no.	Pack of
RPSP2.5-11	4

MT2.5-4 MOUNTING SCREW for RPSP2.5-11

NEW

MT2.5-4 dimensions

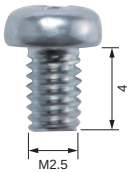

■ Material / Finish : Steel / Trivalent chromate

■ Utilize when affixing RPCB-4B expansion PCB.

Product no.

Product no.	Pack of
MT2.5-4	4

HIGH END DESIGN Aluminium Case HD series

Distinctive design, suitable for many different devices

Industrial Embedded System

Raspberry Pi

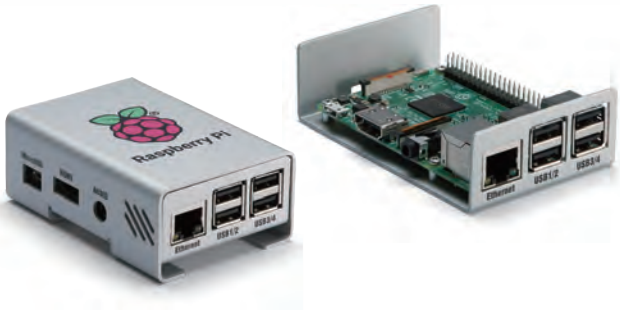

Data Transmitter / Receiver

Measurement / Test Equipment

Audio Amplifier

Power Supply

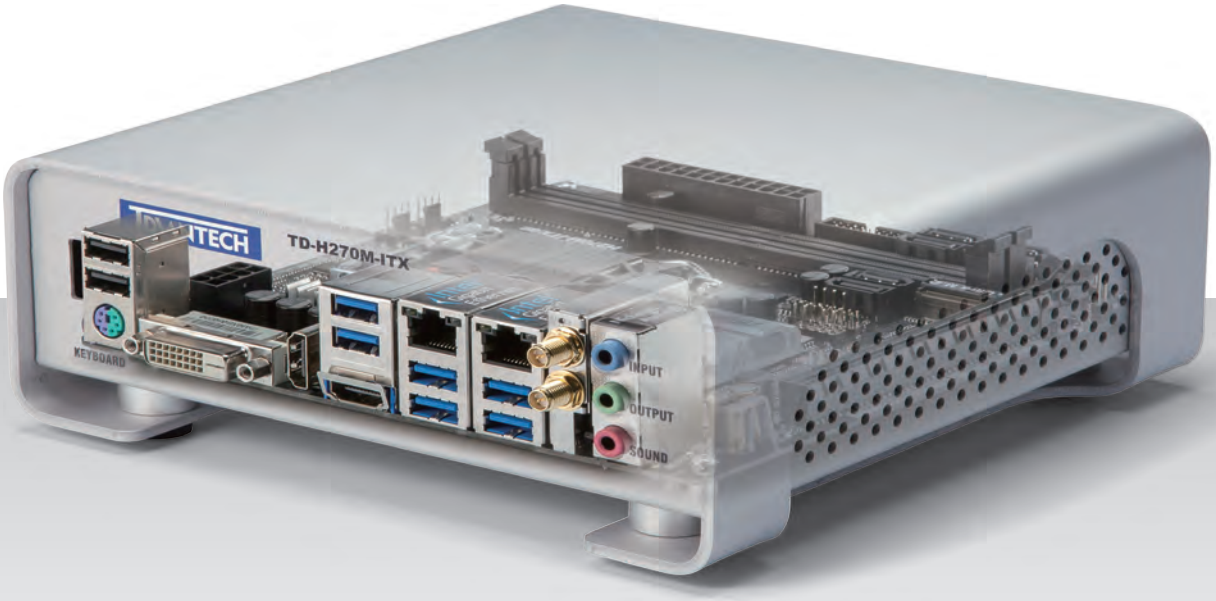

Compatibility with Standard Board Sizes

Raspberry Pi

Board Size
56×85mm

EURO BOARD

Board Size
100×160mm

3.5 inch Board

Board Size
146×102mm

Mini STX

Board Size
140×147mm

Mini ITX

Board Size
170×170mm

● See page 144 for more details.

HD series HIGH-END DESIGN ALUMINIUM CASE

Conductive

- Distinctively designed aluminium case.
- Polished, elegant and sleek metallic silver finish.
- Suitable for embedded system, measurement equipment, data transmitter, audio amplifier, and so on.

HD7-4-10S, 7-7-10S, 10-5-10S

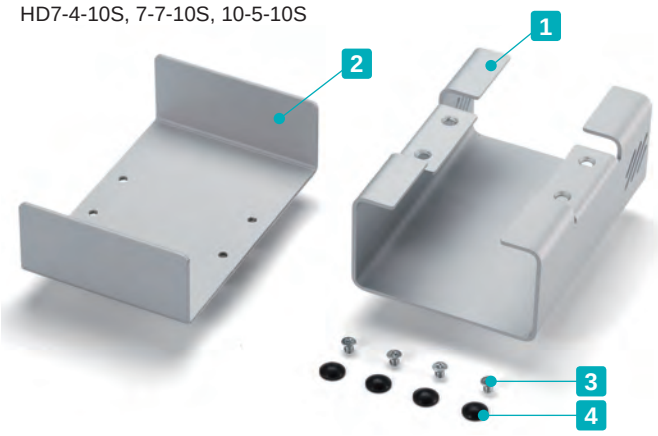

Other models

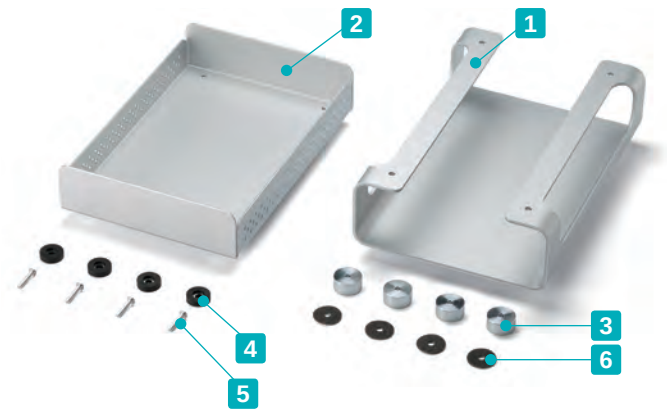

Components

HD7-4-10S, 7-7-10S, 10-5-10S

No.	Part name	Pcs	Material	Color / Finish
1	Cover	1	Aluminium A1100P	Metallic silver / Painted (Conductive inside)
2	Base	1	Aluminium A1100P	Metallic silver / Painted (Conductive inside)
3	Screw	4	Steel	Trivalent chromate
4	Rubber feet	4	Synthetic rubber	Black

Other models

No.	Part name	Pcs	Material	Color / Finish
1	Cover	1	HD11-5-18S ~ HD19-8-21S : Aluminium A1050P	Metallic silver / Painted
			HD21-14-25S ~ HD32-10-23S : Aluminium A1050P	Metallic silver / Painted
2	Base	1	HD11-5-18S ~ HD19-8-21S : Aluminium A1100P	Metallic silver / Painted (Conductive inside)
			HD21-14-25S to HD 32-10-23S : Aluminium A1050P	Metallic silver / Painted
3	Pillar feet	4	Extruded Aluminium A6063S-T5	Silver / Anodized
4	Rubber feet	4	Synthetic rubber	Black
5	Screw	4	Steel	Trivalent chromate
6	Cushion	4	Polyethylene	Black

HD dimensions

■ DXF/DWG/PDF/STP drawings available on our website.

HD7-4-10S • 7-7-10S • 10-5-10S (Conductive)

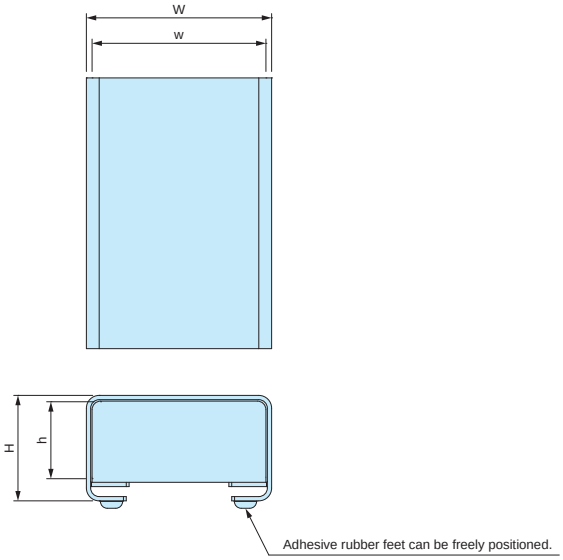

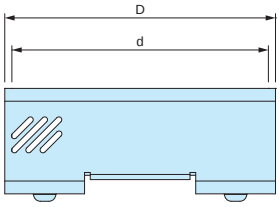

Other models (Non-conductive)

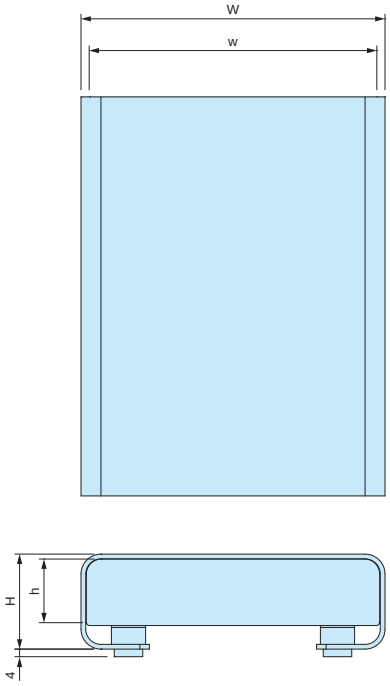

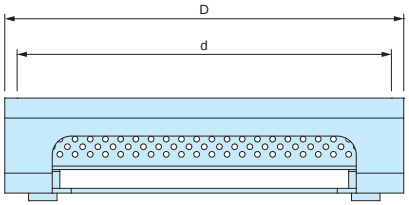

Product no. / Dimensions

Product no.	External dimensions			Internal dimensions			Included screw	Compatible board	Weight (g)
	W	H	D	w	h	d			
HD 7- 4-10S	65	37	95	61	27	90	M3-4 flat head	Raspberry Pi (56 x 85)	94.1
HD 7- 7-10S	65	65	95	61	55.5	90	M3-4 flat head		129
HD10- 5-10S	95	48	95	91	35.5	90	M3-4 flat head	–	138.5
HD11- 5-18S	111	50	175	102.4	33.5	162	M3-16 flat head	Euro Board (100 x 160)	386.3
HD11- 7-18S	111	70	175	102.4	53.5	162	M3-16 flat head		447.7
HD15- 7-16S	151	65	162	142.4	48.5	149	M3-16 flat head	Mini STX (140 x 147)	500.8
HD16- 6-12S	157	60	118	148.4	43.5	105	M3-16 flat head	3.5 Inch Board (146 x 102)	382.1
HD16- 5-21S	160	50	210	151.4	33.5	197	M3-16 flat head	–	573.9
HD19- 8-21S	192	75	210	182.4	57.5	197	M3-20 flat head	Mini ITX (170 x 170)	838.1
HD21-14-25S	210	135	250	199.4	117	236	M3-20 flat head	–	1587.8
HD26- 8-20S	260	80	200	249.4	62	186	M3-20 flat head	–	1162.8
HD32-10-23S	320	100	230	309.4	82	216	M3-20 flat head	–	1678

Uniquely Designed Aluminium Case with distinctive features and easy-to-assemble structure!

Flat panels with a curved arc design creates a unique aesthetic appearance and allows both easy assembly and customization.

Embedded Computer

Raspberry Pi Case

Audio Amplifier

Power Supply

Customization services available at TAKACHI

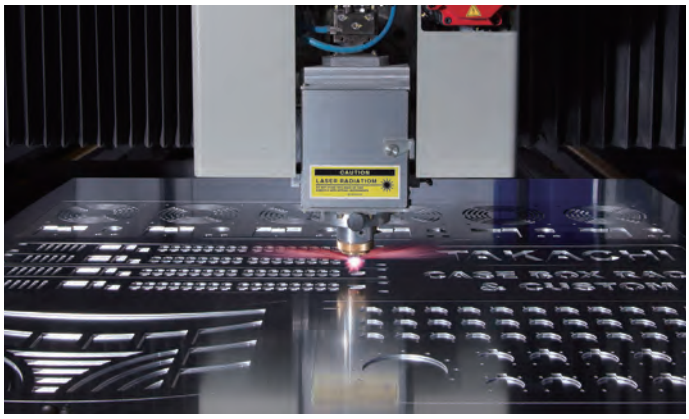

Fiber laser machine allows the processing of aluminium sheets with both high precision and speed.
See page Custom-9 and website for further details.

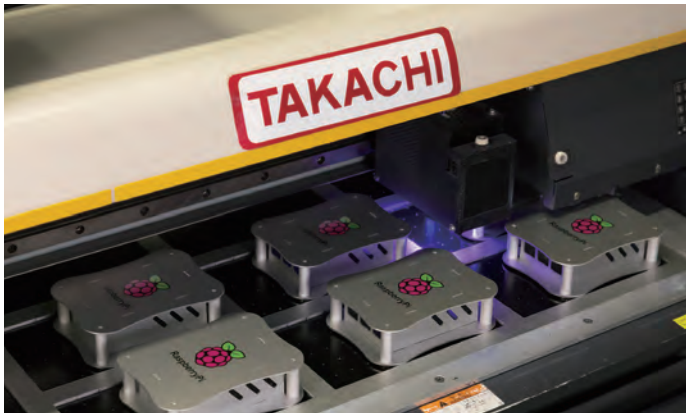

Digital inkjet printing enables high quality full color printing with minimal tooling cost.
High resolution photo images and color gradation can also be printed with ease.
See page Custom-3 ~ Custom-4 and website for further details.

Installation of self-clinching standoffs and nuts are possible.
TAKACHI has over 100 different types of clinching standoffs and nuts available, which can be installed with precision and speed.
See page Custom-11 and website for further details.

Custom Color Anodization • Custom Color Painting

ALR series ARC DESIGN ALUMINIUM CASE

NEW

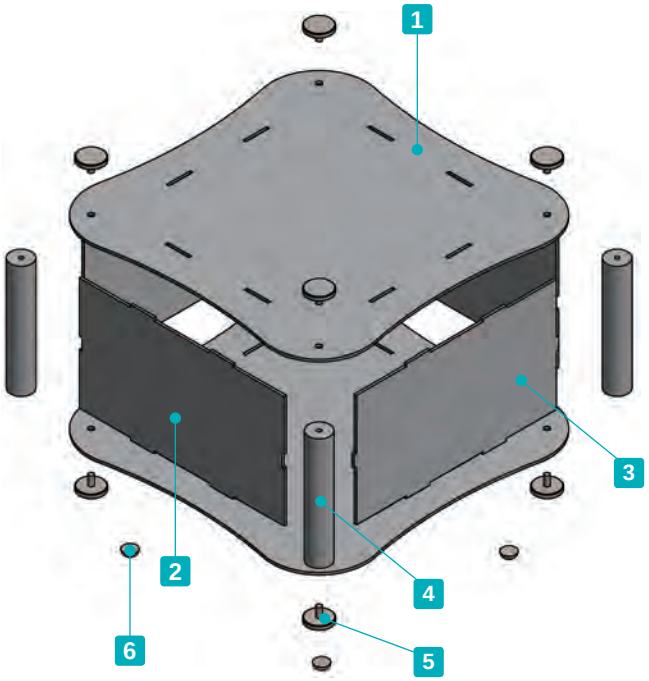

- Curved arc designed aluminium case with corner support columns.
- 6 different sizes are available.
- While elegantly designed, the flat panel structure allows for easy usage and customization.
- ALR11-5-17 and 11-8-17 models are compatible with the Euro Board. ALR18-7-18 and 18-10-18 models are compatible with the Mini ITX board.
- Possible to be used in a flat layout, or a standing layout.
- Knurled thumb screws for easy hand assembly.

- Custom size is available.

Components

No.	Part name	Pcs	Material	Color / Finish
1	Top · bottom cover	1 each	Aluminium A1100P	Silver anodized
2	W panel	2	Aluminium A1100P	Silver anodized
3	D panel	2	Aluminium A1100P	Silver anodized
4	Pillar	4	Extruded aluminium A6063S-T5	Silver anodized
5	Knurled thumb screw	8	Brass	Nickel plated
6	Rubber feet	4	Polyurethane	Transparent

ALR dimensions

■ DXF/DWG/PDF/STP drawings available on our website.

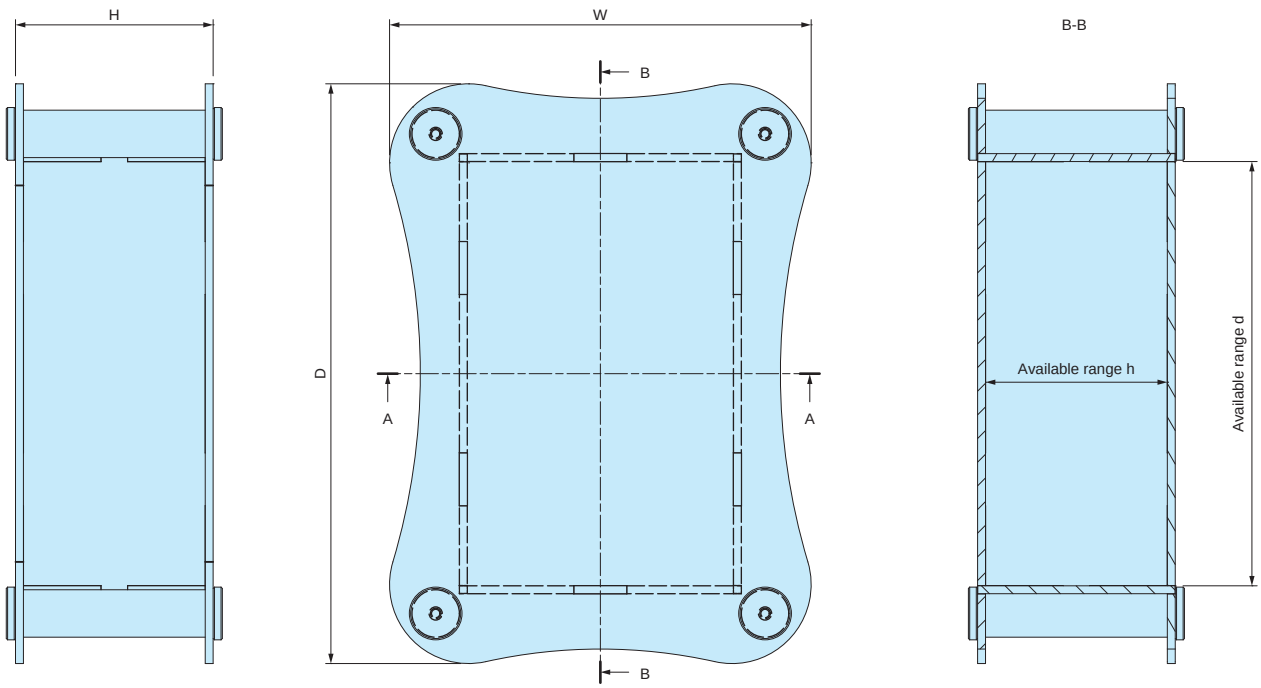

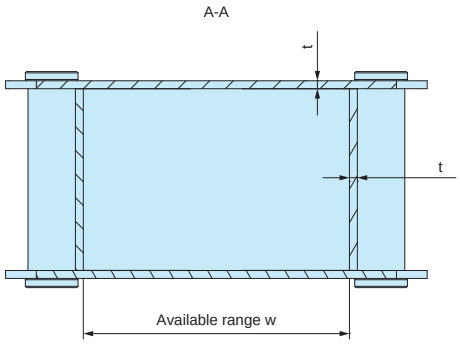

Product no. / Dimensions

Product no.	External dimensions			Available range (Internal)			t	Screw size	Compatible Board Size	Weight (g)
	W	H	D	w	h	d				
ALR10- 5-10	140	50	140	101	47	101	1.5	M3	–	274
ALR11- 5-17	163	45	223	101	41	161	2	M4	Euro Board (100 x 160)	653
ALR11- 8-17	163	75	223	101	71	161	2	M4		816.5
ALR18- 7-18	237	65	237	171	61	171	2	M4	Mini ITX (170 x 170)	1,004
ALR18-10-18	237	100	237	171	96	171	2	M4		1,225
ALR30- 7-20	362	70	264	296	66	196	2	M4	–	1,536

■ Similar transparent type design, as well as custom sizes are also available.

Skeleton acrylic case SKL series
See page 111 ~ 114

Custom sized skeleton acrylic case SKLF series
See website

Custom sized arc design aluminium case ALRF series
See website

AU series

NEXT GENERATION Aluminium Case

The perfect unity of flexibility, versatility, and appearance!

4 Distinct Models for Different Applications

Standard Model AU series

Standard model with front/rear sheet aluminium panels.

See page 151 ~ 154

Detachable Panel Model AUP series

Easy maintenance with detachable front/rear panels.
An EMC shielded AUPE series is also available.

See page 155 ~ 162

Control Box Model AUX series

Structure of extruded aluminium frames on 4 sides.

Suitable for control box use.

EMC shielded AUXE series is also available.

See page 163 ~ 170

Corner Guard Model AUG series

TPE Corner guard model.
An EMC shielded AUGE series is also available.

See page 171 ~ 178

Providing versatile and flexible enclosing solutions

The aluminium case AU series has an assembly-type structure which allows it to be easily customizable. Both versatile and flexible, it is designed to be used as various devices from the classic audio amplifiers to next-gen IoT devices.
Select from a huge line-up of 117 different sizes based on your application type and ideas.

Measuring Equipment

Fiber Optic Transmitter

IoT Gateway

Audio Amplifier

Command Panel

Industrial Embedded PC

Power Supply

AU series ALUMINIUM ENCLOSURE

NEW

- Elegantly designed aluminium enclosure with front/rear panels.
- A large selection of 117 different sizes to choose from.
- Top/bottom covers and front/rear panels are made from easily customizable sheet aluminium material.
- Versatile aluminium enclosure suitable for use as measuring instrument, controller, industrial embedded computer, power supply, audio amplifier, and so on.
- Feet is selectable between rubber or aluminium type.

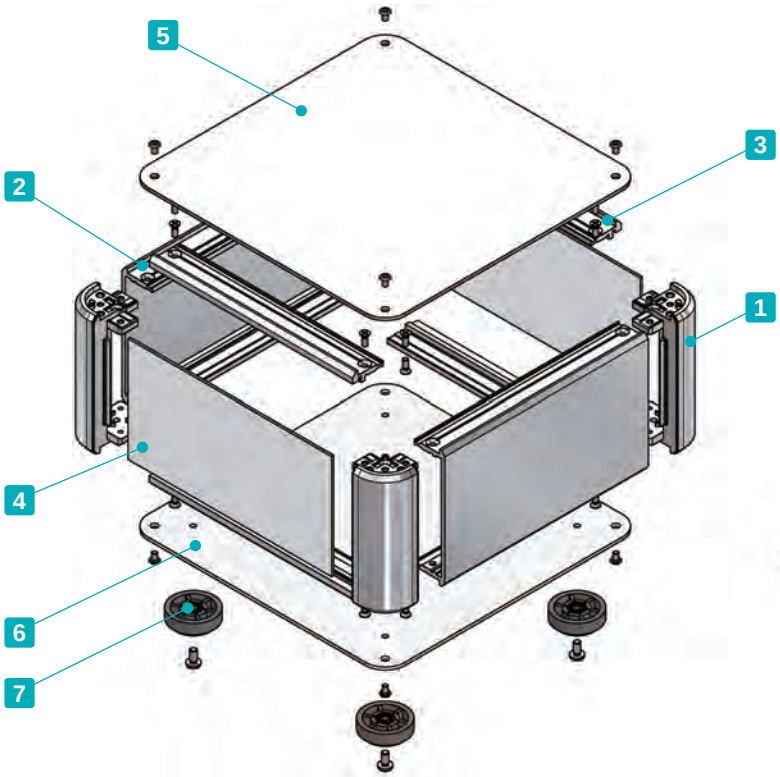

Included screws

- Top / Bottom cover
  M3-5 original trapezoid head (plus / hex) &
  Nickel plated / Black trivalent chromate x 8~16 pcs
- Frame / Panel support frame
  M3-8 flat head & Nickel plated x 16 pcs
- Rubber feet / Aluminium feet
  M4-8 bind head & Black trivalent chromate x 4 pcs

Recommended torque : 0.3 ~ 0.6N • m
* Recommended torque listed is for reference only; actual may differ.
  Assemble after testing torque.

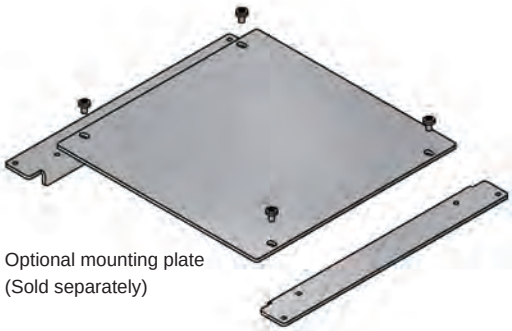

Optional mounting plate
(Sold separately)

Components

No.	Part name	Pcs	Material	Color / Finish
1	Corner block	4	Diecast aluminium ADC12	Silver • Black / Painted (Unfinished inside)
2	Frame	2	Extruded aluminium A6063S-T5	Silver • Black / Anodized
3	Panel support frame	4	Extruded aluminium A6063S-T5	Silver • Black / Anodized
4	Panel	2	Aluminium A1100P	Silver • Black / Anodized
5	Top cover	1	Aluminium A1100P	Silver • Black / Anodized
6	Bottom cover	1	Aluminium A1100P	Silver • Black / Anodized
7	Rubber feet : Aluminium feet	4	TPE (Elastomer) : Aluminium	Black : Silver • Black / Anodized

AU dimensions

■ DXF/DWG/PDF/STP drawings available on our website.

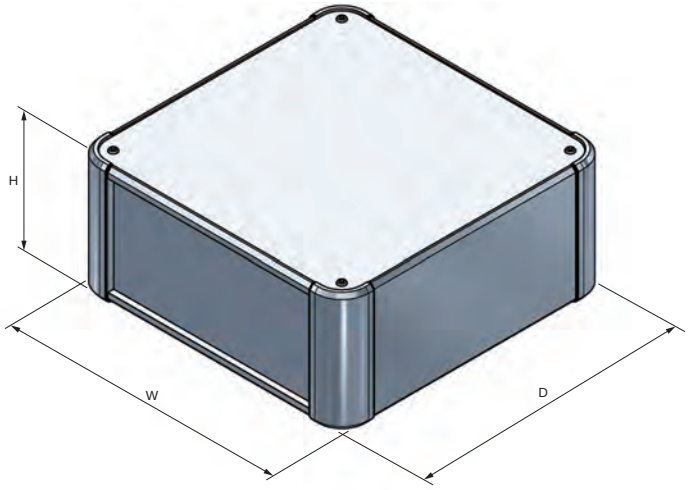

■ Feet is selectable between rubber or aluminium type.
※Rubber and aluminium feet height are different.

Rubber Feet

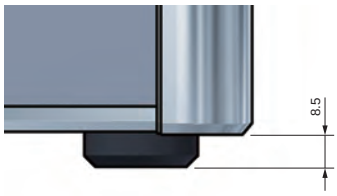

Aluminium Feet

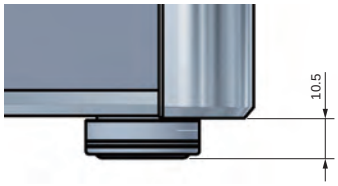

■ Mounting of a PCB or optional mounting plate is made easy through the use of the through-holes inside the aluminium diecast corner block.
See page 180 for how to install mounting plate.

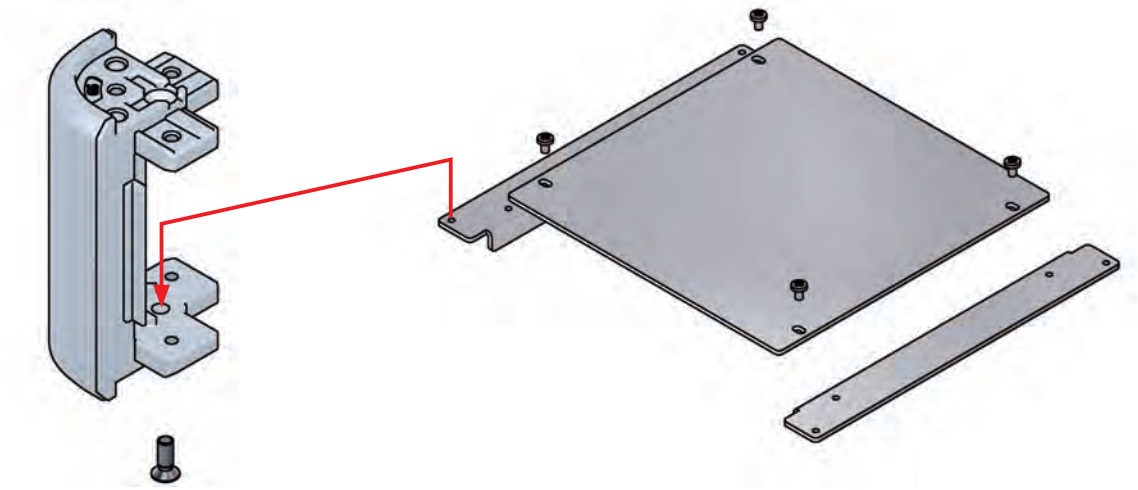

Accessories (Optional parts)

Mounting plate AUC series
See page 179 ~ 180

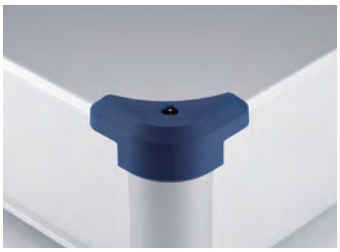

Corner guard AUCG series
See page 180

Elastomer carrying handle FM200
See website

Tilt leg TLW series
See page 222

To select Feet/Screw/Color types, follow steps 1 ~ 3 below.

1 Feet Type

*Color of "Aluminium Feet" will be the same as bottom cover color.

R Rubber (Black / Unfinished)

A Aluminium (Silver / Anodized) (Black / Anodized)

2 Screw Type

*Color of screw will be the same as top • bottom cover color.

P Plus (Silver / Nickel plated) (Black / Black trivalent chromate)

H Hex (Silver / Nickel plated) (Black / Black trivalent chromate)

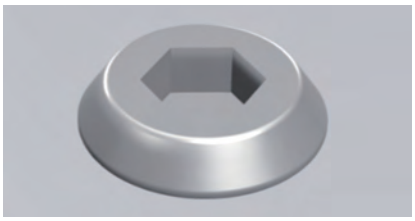

Hex wrench included.

3 Color Type

Please choose from the color combinations listed below.

S S

S B

B S

B B

To determine a product number, suffix Feet/Screw/Color code at the end of product number.

Product Number

AU □ - □ - □ □ □ - □ □

H-W-D dimensions	1 Feet	2 Screw	3 Color
See page 154 for dimensions and product no.	R or A	P or H	SS • SB • BS • BB

Numbering example :
If looking at "H88 x W300 x D200mm, Feet type A, Screw type H, Color type BS"

➡ **AU 88-30-20 AH-BS**

Product no. / Dimensions

■ Please suffix feet, screw, and color code at the end of the product number

Product no.	H	W	D	Weight (kg)
AU 66-16-16□□-□□	66	160	160	0.9
AU 66-16-20□□-□□	66	160	200	1.0
AU 66-16-25□□-□□	66	160	250	1.2
AU 66-16-30□□-□□	66	160	300	1.3
AU 66-20-16□□-□□	66	200	160	1.0
AU 66-20-20□□-□□	66	200	200	1.1
AU 66-20-25□□-□□	66	200	250	1.3
AU 66-20-30□□-□□	66	200	300	1.5
AU 66-20-36□□-□□	66	200	360	1.7
AU 66-20-43□□-□□	66	200	430	2.0
AU 66-25-16□□-□□	66	250	160	1.1
AU 66-25-20□□-□□	66	250	200	1.3
AU 66-25-25□□-□□	66	250	250	1.5
AU 66-25-30□□-□□	66	250	300	1.7
AU 66-25-36□□-□□	66	250	360	2.0
AU 66-25-43□□-□□	66	250	430	2.3
AU 66-30-16□□-□□	66	300	160	1.3
AU 66-30-20□□-□□	66	300	200	1.5
AU 66-30-25□□-□□	66	300	250	1.7
AU 66-30-30□□-□□	66	300	300	1.9
AU 66-30-36□□-□□	66	300	360	2.2
AU 66-30-43□□-□□	66	300	430	2.6
AU 66-30-50□□-□□	66	300	500	2.9
AU 66-36-20□□-□□	66	360	200	1.7
AU 66-36-25□□-□□	66	360	250	1.9
AU 66-36-30□□-□□	66	360	300	2.2
AU 66-36-36□□-□□	66	360	360	2.5
AU 66-36-43□□-□□	66	360	430	2.9
AU 66-36-50□□-□□	66	360	500	3.3
AU 66-43-20□□-□□	66	430	200	1.9
AU 66-43-25□□-□□	66	430	250	2.2
AU 66-43-30□□-□□	66	430	300	2.5
AU 66-43-36□□-□□	66	430	360	2.9
AU 66-43-43□□-□□	66	430	430	3.3
AU 66-43-50□□-□□	66	430	500	3.7
AU 66-50-30□□-□□	66	500	300	2.8
AU 66-50-36□□-□□	66	500	360	3.3
AU 66-50-43□□-□□	66	500	430	3.7
AU 66-50-50□□-□□	66	500	500	4.2
AU 88-16-16□□-□□	88	160	160	0.9
AU 88-16-20□□-□□	88	160	200	1.1
AU 88-16-25□□-□□	88	160	250	1.3
AU 88-16-30□□-□□	88	160	300	1.4
AU 88-20-16□□-□□	88	200	160	1.1
AU 88-20-20□□-□□	88	200	200	1.2
AU 88-20-25□□-□□	88	200	250	1.4
AU 88-20-30□□-□□	88	200	300	1.6
AU 88-20-36□□-□□	88	200	360	1.8
AU 88-20-43□□-□□	88	200	430	2.1
AU 88-25-16□□-□□	88	250	160	1.2
AU 88-25-20□□-□□	88	250	200	1.4
AU 88-25-25□□-□□	88	250	250	1.6
AU 88-25-30□□-□□	88	250	300	1.8
AU 88-25-36□□-□□	88	250	360	2.1
AU 88-25-43□□-□□	88	250	430	2.4
AU 88-30-16□□-□□	88	300	160	1.4
AU 88-30-20□□-□□	88	300	200	1.6
AU 88-30-25□□-□□	88	300	250	1.8
AU 88-30-30□□-□□	88	300	300	2.1

Product no.	H	W	D	Weight (kg)
AU 88-30-36□□-□□	88	300	360	2.4
AU 88-30-43□□-□□	88	300	430	2.7
AU 88-30-50□□-□□	88	300	500	3.1
AU 88-36-20□□-□□	88	360	200	1.8
AU 88-36-25□□-□□	88	360	250	2.1
AU 88-36-30□□-□□	88	360	300	2.3
AU 88-36-36□□-□□	88	360	360	2.7
AU 88-36-43□□-□□	88	360	430	3.1
AU 88-36-50□□-□□	88	360	500	3.5
AU 88-43-20□□-□□	88	430	200	2.1
AU 88-43-25□□-□□	88	430	250	2.4
AU 88-43-30□□-□□	88	430	300	2.7
AU 88-43-36□□-□□	88	430	360	3.1
AU 88-43-43□□-□□	88	430	430	3.5
AU 88-43-50□□-□□	88	430	500	4.0
AU 88-50-30□□-□□	88	500	300	3.0
AU 88-50-36□□-□□	88	500	360	3.4
AU 88-50-43□□-□□	88	500	430	3.9
AU 88-50-50□□-□□	88	500	500	4.4
AU133-16-16□□-□□	132.5	160	160	1.2
AU133-16-20□□-□□	132.5	160	200	1.4
AU133-16-25□□-□□	132.5	160	250	1.6
AU133-16-30□□-□□	132.5	160	300	1.8
AU133-20-16□□-□□	132.5	200	160	1.3
AU133-20-20□□-□□	132.5	200	200	1.5
AU133-20-25□□-□□	132.5	200	250	1.7
AU133-20-30□□-□□	132.5	200	300	2.0
AU133-20-36□□-□□	132.5	200	360	2.3
AU133-20-43□□-□□	132.5	200	430	2.6
AU133-25-16□□-□□	132.5	250	160	1.5
AU133-25-20□□-□□	132.5	250	200	1.7
AU133-25-25□□-□□	132.5	250	250	2.0
AU133-25-30□□-□□	132.5	250	300	2.2
AU133-25-36□□-□□	132.5	250	360	2.6
AU133-25-43□□-□□	132.5	250	430	3.0
AU133-30-16□□-□□	132.5	300	160	1.7
AU133-30-20□□-□□	132.5	300	200	1.9
AU133-30-25□□-□□	132.5	300	250	2.2
AU133-30-30□□-□□	132.5	300	300	2.5
AU133-30-36□□-□□	132.5	300	360	2.8
AU133-30-43□□-□□	132.5	300	430	3.3
AU133-30-50□□-□□	132.5	300	500	3.7
AU133-36-20□□-□□	132.5	360	200	2.1
AU133-36-25□□-□□	132.5	360	250	2.5
AU133-36-30□□-□□	132.5	360	300	2.8
AU133-36-36□□-□□	132.5	360	360	3.2
AU133-36-43□□-□□	132.5	360	430	3.7
AU133-36-50□□-□□	132.5	360	500	4.1
AU133-43-20□□-□□	132.5	430	200	2.4
AU133-43-25□□-□□	132.5	430	250	2.8
AU133-43-30□□-□□	132.5	430	300	3.2
AU133-43-36□□-□□	132.5	430	360	3.6
AU133-43-43□□-□□	132.5	430	430	4.1
AU133-43-50□□-□□	132.5	430	500	4.6
AU133-50-30□□-□□	132.5	500	300	3.5
AU133-50-36□□-□□	132.5	500	360	4.0
AU133-50-43□□-□□	132.5	500	430	4.6
AU133-50-50□□-□□	132.5	500	500	5.1

*Weight listed is calculated based on rubber feet selection.

AUP series ALUMINIUM ENCLOSURE with DETACHABLE PANELS

NEW

Conductive

- Elegantly designed aluminium enclosure with easily detachable front/rear panels.
  Captive screws allow for ease of maintenance as there is little risk of the screws dropping out and getting lost.
- The inner surface is unfinished, allowing the enclosure to be conductive.
- A large selection of 117 different sizes to choose from.

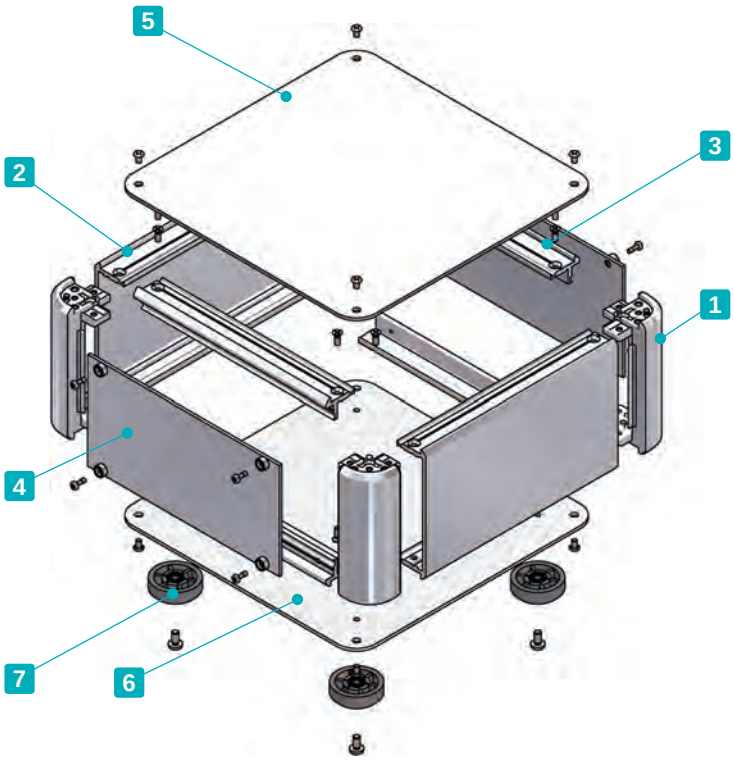

Included screws

- Top / Bottom cover
  M3-5 original trapezoid head (plus / hex) &
  M3-8 flat head & Nickel plated x 16 pcs
- Frame / Panel support frame
  M3-8 flat head & Nickel plated x 16 pcs
- Rubber feet / Aluminium feet
  M4-8 bind head & Black trivalent chromate x 4 pcs
- Panel
  Captive M2.5-7 pan head & Nickel plated x 8~12 pcs

Recommended torque : M2.5 - 0.15 ~ 0.2N • m
M3 / M4 - 0.3 ~ 0.6N • m

* Recommended torque listed is for reference only; actual may differ.
  Assemble after testing torque.

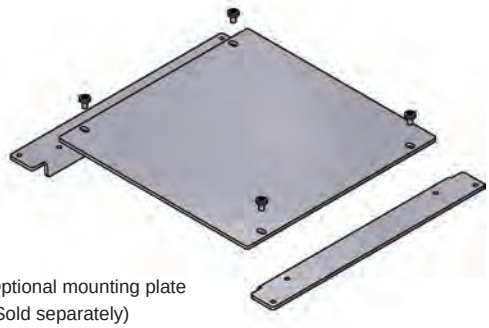

Optional mounting plate
(Sold separately)

Components

No.	Part name	Pcs	Material	Color / Finish
1	Corner block	4	Diecast aluminium ADC12	Silver • Black / Painted (Unfinished inside)
2	Frame	2	Extruded aluminium A6063S-T5	Silver / Painted (Unfinished inside)
3	Panel support frame	4	Extruded aluminium A6063S-T5	Silver / Painted (Unfinished inside)
4	Panel	2	Aluminium A1100P	Silver / Painted (Conductive inside)
5	Top cover	1	Aluminium A1100P	Silver / Painted (Conductive inside)
6	Bottom cover	1	Aluminium A1100P	Silver / Painted (Conductive inside)
7	Rubber feet : Aluminium feet	4	TPE (Elastomer) : Aluminium	Black : Silver / Anodized

AUP dimensions

■ DXF/DWG/PDF/STP drawings available on our website.

■ Feet is selectable between rubber or aluminium type.
※Rubber and aluminium feet height are different.

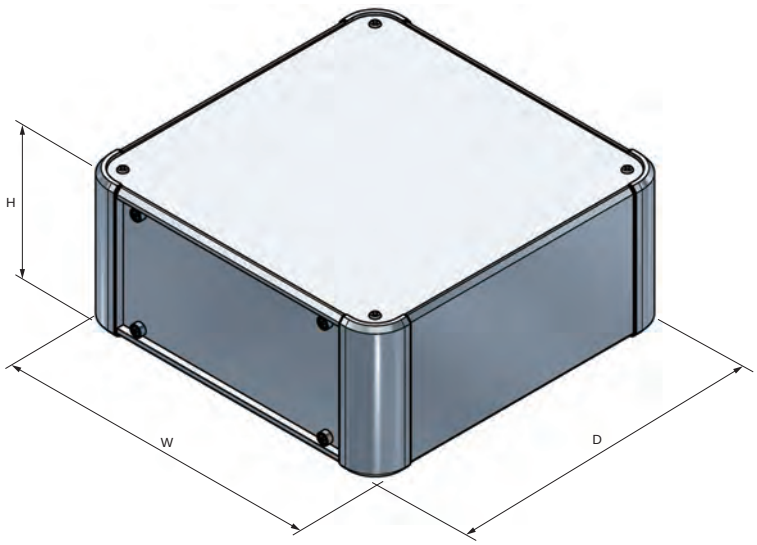

Rubber Feet

Aluminium Feet

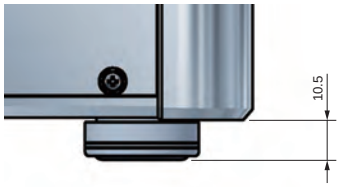

■ Mounting of a PCB or optional mounting plate is made easy through the use of the through-holes inside the aluminium diecast corner block.
See page 180 for how to install mounting plate.

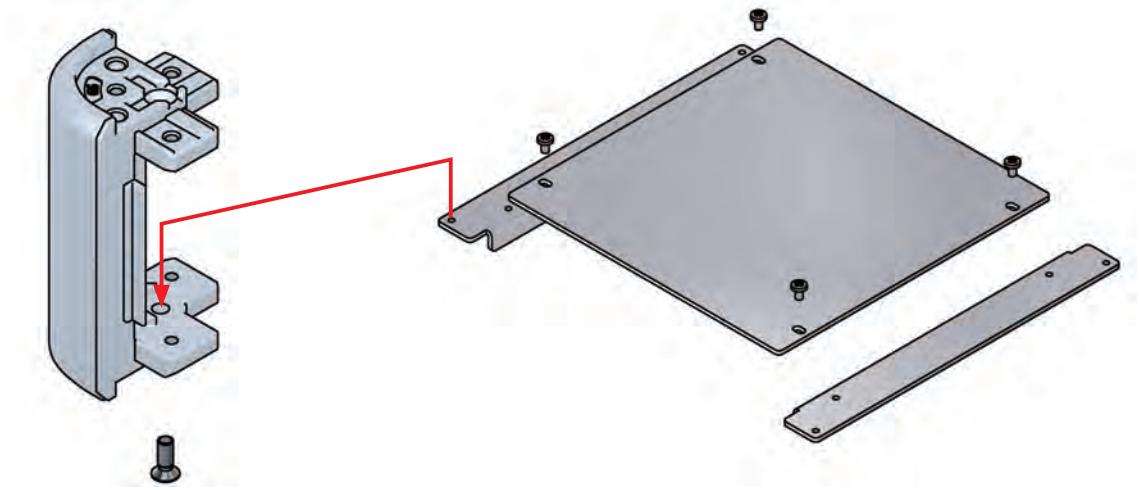

Accessories (Optional parts)

Mounting plate AUC series
See page 179 ~ 180

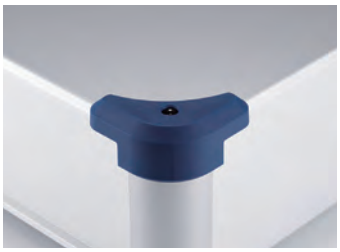

Corner guard AUCG series
See page 180

Elastomer carrying handle FM200
See website

Tilt leg TLW series
See page 222

To select Feet/Screw/Color types, follow steps 1 ~ 3 below.

1 Feet Type

R Rubber (Black / Unfinished)

A Aluminium (Silver / Anodized)

2 Screw Type

P Plus (Silver / Nickel plated)

H Hex (Silver / Nickel plated)

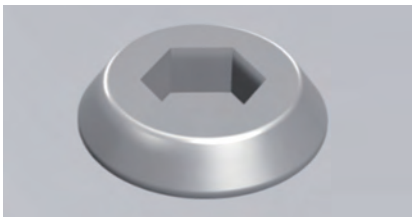

Hex wrench included.

3 Color Type

Please choose from the color combinations listed below.

S S

S B

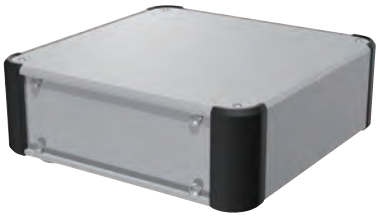

To determine a product number, suffix Feet/Screw/Color code at the end of product number.

Product Number

AUP □ - □ - □ □ □ - □ □

H-W-D dimensions

See page 158 for dimensions and product no.

1 Feet: R or A

2 Screw: P or H

3 Color: SS • SB

Numbering example :
If looking at "H88 x W300 x D200mm, Feet type A, Screw type H, Color type SB"

➡ AUP 88-30-20 AH-SB

Product no. / Dimensions

■ Please suffix feet, screw, and color code at the end of the product number

Product no.	H	W	D	Weight (kg)
AUP 66-16-16□□-□□	66	160	160	0.9
AUP 66-16-20□□-□□	66	160	200	1.0
AUP 66-16-25□□-□□	66	160	250	1.2
AUP 66-16-30□□-□□	66	160	300	1.3
AUP 66-20-16□□-□□	66	200	160	1.0
AUP 66-20-20□□-□□	66	200	200	1.2
AUP 66-20-25□□-□□	66	200	250	1.4
AUP 66-20-30□□-□□	66	200	300	1.5
AUP 66-20-36□□-□□	66	200	360	1.7
AUP 66-20-43□□-□□	66	200	430	2.0
AUP 66-25-16□□-□□	66	250	160	1.2
AUP 66-25-20□□-□□	66	250	200	1.4
AUP 66-25-25□□-□□	66	250	250	1.6
AUP 66-25-30□□-□□	66	250	300	1.8
AUP 66-25-36□□-□□	66	250	360	2.0
AUP 66-25-43□□-□□	66	250	430	2.3
AUP 66-30-16□□-□□	66	300	160	1.4
AUP 66-30-20□□-□□	66	300	200	1.5
AUP 66-30-25□□-□□	66	300	250	1.8
AUP 66-30-30□□-□□	66	300	300	2.0
AUP 66-30-36□□-□□	66	300	360	2.3
AUP 66-30-43□□-□□	66	300	430	2.6
AUP 66-30-50□□-□□	66	300	500	3.0
AUP 66-36-20□□-□□	66	360	200	1.8
AUP 66-36-25□□-□□	66	360	250	2.0
AUP 66-36-30□□-□□	66	360	300	2.3
AUP 66-36-36□□-□□	66	360	360	2.6
AUP 66-36-43□□-□□	66	360	430	3.0
AUP 66-36-50□□-□□	66	360	500	3.4
AUP 66-43-20□□-□□	66	430	200	2.1
AUP 66-43-25□□-□□	66	430	250	2.4
AUP 66-43-30□□-□□	66	430	300	2.7
AUP 66-43-36□□-□□	66	430	360	3.0
AUP 66-43-43□□-□□	66	430	430	3.4
AUP 66-43-50□□-□□	66	430	500	3.9
AUP 66-50-30□□-□□	66	500	300	3.0
AUP 66-50-36□□-□□	66	500	360	3.4
AUP 66-50-43□□-□□	66	500	430	3.9
AUP 66-50-50□□-□□	66	500	500	4.3
AUP 88-16-16□□-□□	88	160	160	1.0
AUP 88-16-20□□-□□	88	160	200	1.2
AUP 88-16-25□□-□□	88	160	250	1.3
AUP 88-16-30□□-□□	88	160	300	1.5
AUP 88-20-16□□-□□	88	200	160	1.2
AUP 88-20-20□□-□□	88	200	200	1.3
AUP 88-20-25□□-□□	88	200	250	1.5
AUP 88-20-30□□-□□	88	200	300	1.7
AUP 88-20-36□□-□□	88	200	360	1.9
AUP 88-20-43□□-□□	88	200	430	2.2
AUP 88-25-16□□-□□	88	250	160	1.3
AUP 88-25-20□□-□□	88	250	200	1.5
AUP 88-25-25□□-□□	88	250	250	1.7
AUP 88-25-30□□-□□	88	250	300	1.9
AUP 88-25-36□□-□□	88	250	360	2.2
AUP 88-25-43□□-□□	88	250	430	2.5
AUP 88-30-16□□-□□	88	300	160	1.5
AUP 88-30-20□□-□□	88	300	200	1.7
AUP 88-30-25□□-□□	88	300	250	1.9
AUP 88-30-30□□-□□	88	300	300	2.2
AUP 88-30-36□□-□□	88	300	360	2.5
AUP 88-30-43□□-□□	88	300	430	2.9
AUP 88-30-50□□-□□	88	300	500	3.2
AUP 88-36-20□□-□□	88	360	200	1.9
AUP 88-36-25□□-□□	88	360	250	2.2
AUP 88-36-30□□-□□	88	360	300	2.5
AUP 88-36-36□□-□□	88	360	360	2.8
AUP 88-36-43□□-□□	88	360	430	3.2
AUP 88-36-50□□-□□	88	360	500	3.6
AUP 88-43-20□□-□□	88	430	200	2.2
AUP 88-43-25□□-□□	88	430	250	2.5
AUP 88-43-30□□-□□	88	430	300	2.9
AUP 88-43-36□□-□□	88	430	360	3.2
AUP 88-43-43□□-□□	88	430	430	3.7
AUP 88-43-50□□-□□	88	430	500	4.1
AUP 88-50-30□□-□□	88	500	300	3.2
AUP 88-50-36□□-□□	88	500	360	3.6
AUP 88-50-43□□-□□	88	500	430	4.1
AUP 88-50-50□□-□□	88	500	500	4.6
AUP133-16-16□□-□□	132.5	160	160	1.3
AUP133-16-20□□-□□	132.5	160	200	1.4
AUP133-16-25□□-□□	132.5	160	250	1.7
AUP133-16-30□□-□□	132.5	160	300	1.9
AUP133-20-16□□-□□	132.5	200	160	1.4
AUP133-20-20□□-□□	132.5	200	200	1.6
AUP133-20-25□□-□□	132.5	200	250	1.8
AUP133-20-30□□-□□	132.5	200	300	2.1
AUP133-20-36□□-□□	132.5	200	360	2.4
AUP133-20-43□□-□□	132.5	200	430	2.7
AUP133-25-16□□-□□	132.5	250	160	1.6
AUP133-25-20□□-□□	132.5	250	200	1.8
AUP133-25-25□□-□□	132.5	250	250	2.1
AUP133-25-30□□-□□	132.5	250	300	2.4
AUP133-25-36□□-□□	132.5	250	360	2.7
AUP133-25-43□□-□□	132.5	250	430	3.1
AUP133-30-16□□-□□	132.5	300	160	1.8
AUP133-30-20□□-□□	132.5	300	200	2.0
AUP133-30-25□□-□□	132.5	300	250	2.3
AUP133-30-30□□-□□	132.5	300	300	2.6
AUP133-30-36□□-□□	132.5	300	360	3.0
AUP133-30-43□□-□□	132.5	300	430	3.4
AUP133-30-50□□-□□	132.5	300	500	3.8
AUP133-36-20□□-□□	132.5	360	200	2.3
AUP133-36-25□□-□□	132.5	360	250	2.6
AUP133-36-30□□-□□	132.5	360	300	3.0
AUP133-36-36□□-□□	132.5	360	360	3.3
AUP133-36-43□□-□□	132.5	360	430	3.8
AUP133-36-50□□-□□	132.5	360	500	4.3
AUP133-43-20□□-□□	132.5	430	200	2.6
AUP133-43-25□□-□□	132.5	430	250	3.0
AUP133-43-30□□-□□	132.5	430	300	3.4
AUP133-43-36□□-□□	132.5	430	360	3.8
AUP133-43-43□□-□□	132.5	430	430	4.3
AUP133-43-50□□-□□	132.5	430	500	4.8
AUP133-50-30□□-□□	132.5	500	300	3.8
AUP133-50-36□□-□□	132.5	500	360	4.2
AUP133-50-43□□-□□	132.5	500	430	4.8
AUP133-50-50□□-□□	132.5	500	500	5.3

*Weight listed is calculated based on rubber feet selection.

AUPE series EMC SHIELDED ENCLOSURE with DETACHABLE PANELS

NEW

EMC Shielding Effects

- Elegantly designed EMC shielded aluminium enclosure with detachable front/rear panels.
- Suitable to be used as an easy maintenance desktop case due to its detachable front/rear panels.
  Captive screws allow for ease of maintenance as there is little risk of the screws dropping out and getting lost.
- A large selection of 117 different sizes to choose from.

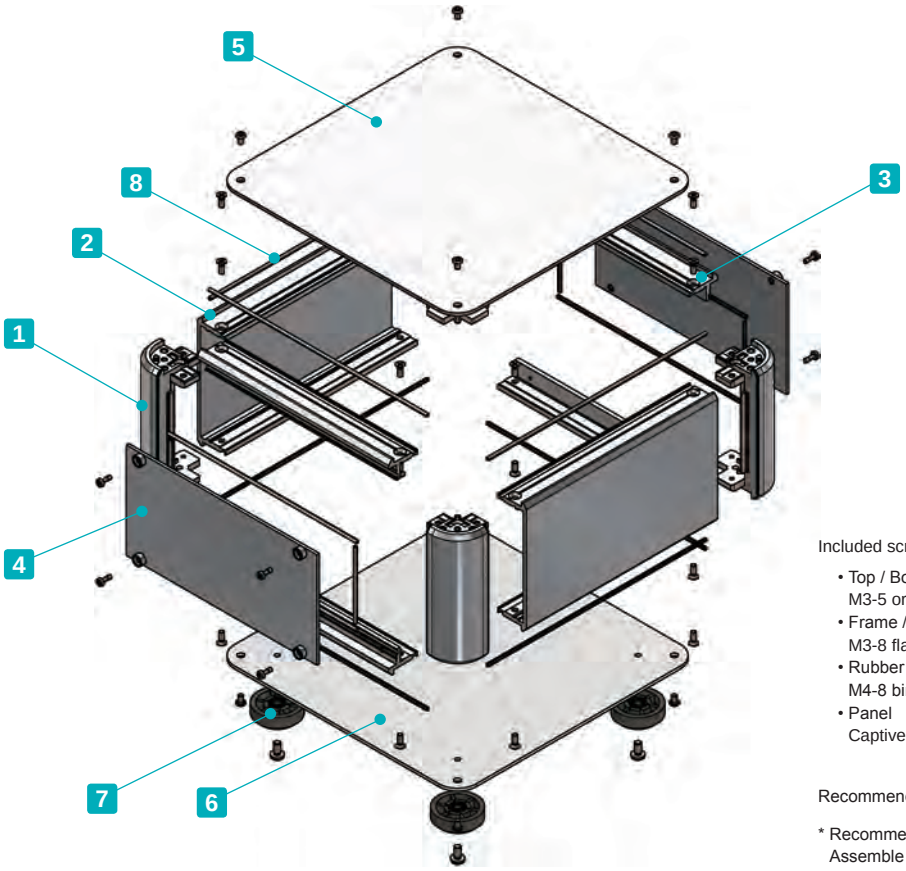

Included screws

- Top / Bottom cover
  M3-5 original trapezoid head (plus / hex) & Nickel plated x 8~16 pcs
- Frame / Panel support frame
  M3-8 flat head & Nickel plated x 16 pcs
- Rubber feet / Aluminium feet
  M4-8 bind head & Black trivalent chromate x 4 pcs
- Panel
  Captive M2.5-7 pan head & Nickel plated x 8 ~ 12 pcs

Recommended torque : M2.5 - 0.15 ~ 0.2N • m
M3 / M4 - 0.3 ~ 0.6N • m

* Recommended torque listed is for reference only; actual may differ.
Assemble after testing torque.

Components

No.	Part name	Pcs	Material	Color / Finish
1	Corner block	4	Diecast aluminium ADC12	Silver • Black / Painted (Unfinished inside)
2	Frame	2	Extruded aluminium A6063S-T5	Silver / Painted (Unfinished inside)
3	Panel support frame	4	Extruded aluminium A6063S-T5	Silver / Painted (Unfinished inside)
4	Panel	2	Aluminium A1100P	Silver / Painted (Conductive inside)
5	Top cover	1	Aluminium A1100P	Silver / Painted (Conductive inside)
6	Bottom cover	1	Aluminium A1100P	Silver / Painted (Conductive inside)
7	Rubber feet : Aluminium feet	4	TPE (Elastomer) : Aluminium	Black : Silver / Anodized
8	EMC shielding gasket	16	Conductive fiber UL94V-0	Metallic gray

AUPE dimensions

■ DXF/DWG/PDF/STP drawings available on our website.

■ Feet is selectable between rubber or aluminium type.
※Rubber and aluminium feet height are different.

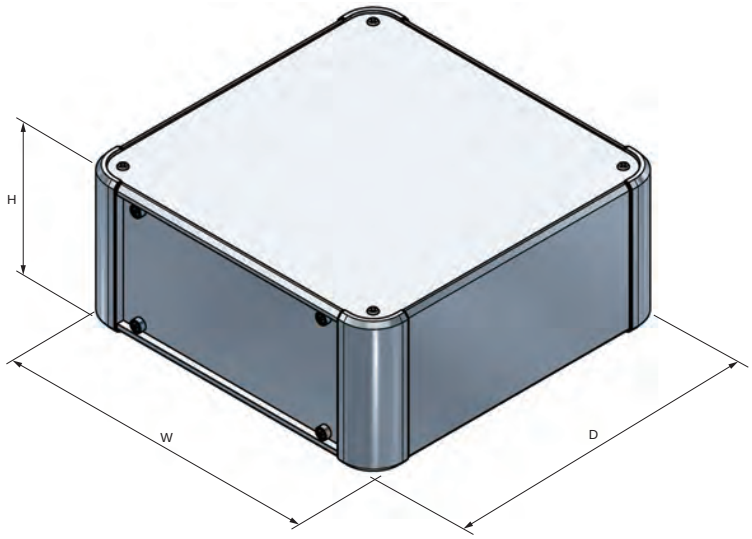

Rubber Feet

Aluminium Feet

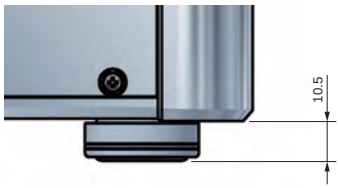

■ Install the EMC shielding gasket into the grooves on the frame, panel support frame, and corner block.

Frame

Panel support frame

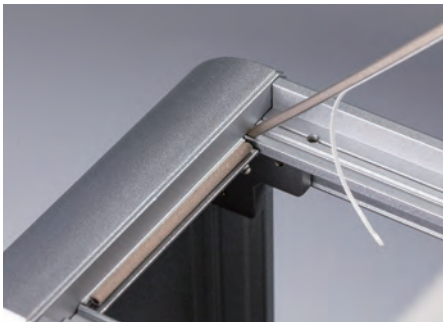

Corner block

Accessories (Optional parts)

Mounting plate AUC series
See page 179 ~ 180

Elastomer carrying handle FM200
See website

Tilt leg TLW series
See page 222

EMC shielding fan filter EMF series
See website

To select Feet/Screw/Color types, follow steps 1 ~ 3 below.

1 Feet Type

R Rubber (Black / Unfinished)

A Aluminium (Silver / Anodized)

2 Screw Type

P Plus (Silver / Nickel plated)

H Hex (Silver / Nickel plated)

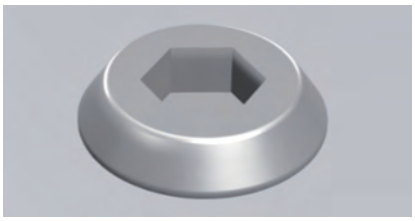

Hex wrench included.

3 Color Type

Please choose from the color combinations listed below.

S S

S B

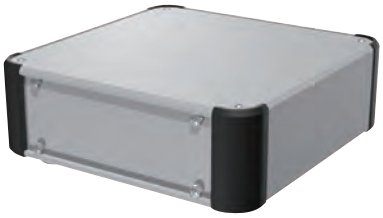

To determine a product number, suffix Feet/Screw/Color code at the end of product number.

Product Number

AUPE □ - □ - □ □□ - □□

H-W-D dimensions	1 Feet	2 Screw	3 Color
See page 162 for dimensions / product no.	R or A	P or H	SS • SB

Numbering example :
If looking at "H133 x W300 x D200mm, Feet type A, Screw type H, Color type SS"

➡ AUPE 133-30-20 AH-SS

Product no. / Dimensions

■ Please suffix feet, screw, and color code at the end of the product number

Product no.	H	W	D	Weight (kg)
AUPE 66-16-16□□-□□	66	160	160	0.9
AUPE 66-16-20□□-□□	66	160	200	1.0
AUPE 66-16-25□□-□□	66	160	250	1.2
AUPE 66-16-30□□-□□	66	160	300	1.4
AUPE 66-20-16□□-□□	66	200	160	1.0
AUPE 66-20-20□□-□□	66	200	200	1.2
AUPE 66-20-25□□-□□	66	200	250	1.4
AUPE 66-20-30□□-□□	66	200	300	1.5
AUPE 66-20-36□□-□□	66	200	360	1.8
AUPE 66-20-43□□-□□	66	200	430	2.0
AUPE 66-25-16□□-□□	66	250	160	1.2
AUPE 66-25-20□□-□□	66	250	200	1.4
AUPE 66-25-25□□-□□	66	250	250	1.6
AUPE 66-25-30□□-□□	66	250	300	1.8
AUPE 66-25-36□□-□□	66	250	360	2.0
AUPE 66-25-43□□-□□	66	250	430	2.3
AUPE 66-30-16□□-□□	66	300	160	1.4
AUPE 66-30-20□□-□□	66	300	200	1.6
AUPE 66-30-25□□-□□	66	300	250	1.8
AUPE 66-30-30□□-□□	66	300	300	2.0
AUPE 66-30-36□□-□□	66	300	360	2.3
AUPE 66-30-43□□-□□	66	300	430	2.6
AUPE 66-30-50□□-□□	66	300	500	3.0
AUPE 66-36-20□□-□□	66	360	200	1.8
AUPE 66-36-25□□-□□	66	360	250	2.0
AUPE 66-36-30□□-□□	66	360	300	2.3
AUPE 66-36-36□□-□□	66	360	360	2.6
AUPE 66-36-43□□-□□	66	360	430	3.0
AUPE 66-36-50□□-□□	66	360	500	3.4
AUPE 66-43-20□□-□□	66	430	200	2.1
AUPE 66-43-25□□-□□	66	430	250	2.4
AUPE 66-43-30□□-□□	66	430	300	2.7
AUPE 66-43-36□□-□□	66	430	360	3.0
AUPE 66-43-43□□-□□	66	430	430	3.4
AUPE 66-43-50□□-□□	66	430	500	3.9
AUPE 66-50-30□□-□□	66	500	300	3.0
AUPE 66-50-36□□-□□	66	500	360	3.4
AUPE 66-50-43□□-□□	66	500	430	3.9
AUPE 66-50-50□□-□□	66	500	500	4.3
AUPE 88-16-16□□-□□	88	160	160	1.0
AUPE 88-16-20□□-□□	88	160	200	1.2
AUPE 88-16-25□□-□□	88	160	250	1.3
AUPE 88-16-30□□-□□	88	160	300	1.5
AUPE 88-20-16□□-□□	88	200	160	1.2
AUPE 88-20-20□□-□□	88	200	200	1.3
AUPE 88-20-25□□-□□	88	200	250	1.5
AUPE 88-20-30□□-□□	88	200	300	1.7
AUPE 88-20-36□□-□□	88	200	360	1.9
AUPE 88-20-43□□-□□	88	200	430	2.2
AUPE 88-25-16□□-□□	88	250	160	1.3
AUPE 88-25-20□□-□□	88	250	200	1.5
AUPE 88-25-25□□-□□	88	250	250	1.7
AUPE 88-25-30□□-□□	88	250	300	1.9
AUPE 88-25-36□□-□□	88	250	360	2.2
AUPE 88-25-43□□-□□	88	250	430	2.5
AUPE 88-30-16□□-□□	88	300	160	1.5
AUPE 88-30-20□□-□□	88	300	200	1.7
AUPE 88-30-25□□-□□	88	300	250	1.9
AUPE 88-30-30□□-□□	88	300	300	2.2

Product no.	H	W	D	Weight (kg)
AUPE 88-30-36□□-□□	88	300	360	2.5
AUPE 88-30-43□□-□□	88	300	430	2.9
AUPE 88-30-50□□-□□	88	300	500	3.2
AUPE 88-36-20□□-□□	88	360	200	1.9
AUPE 88-36-25□□-□□	88	360	250	2.2
AUPE 88-36-30□□-□□	88	360	300	2.5
AUPE 88-36-36□□-□□	88	360	360	2.8
AUPE 88-36-43□□-□□	88	360	430	3.2
AUPE 88-36-50□□-□□	88	360	500	3.6
AUPE 88-43-20□□-□□	88	430	200	2.2
AUPE 88-43-25□□-□□	88	430	250	2.6
AUPE 88-43-30□□-□□	88	430	300	2.9
AUPE 88-43-36□□-□□	88	430	360	3.3
AUPE 88-43-43□□-□□	88	430	430	3.7
AUPE 88-43-50□□-□□	88	430	500	4.1
AUPE 88-50-30□□-□□	88	500	300	3.2
AUPE 88-50-36□□-□□	88	500	360	3.6
AUPE 88-50-43□□-□□	88	500	430	4.1
AUPE 88-50-50□□-□□	88	500	500	4.6
AUPE133-16-16□□-□□	132.5	160	160	1.3
AUPE133-16-20□□-□□	132.5	160	200	1.4
AUPE133-16-25□□-□□	132.5	160	250	1.7
AUPE133-16-30□□-□□	132.5	160	300	1.9
AUPE133-20-16□□-□□	132.5	200	160	1.4
AUPE133-20-20□□-□□	132.5	200	200	1.6
AUPE133-20-25□□-□□	132.5	200	250	1.9
AUPE133-20-30□□-□□	132.5	200	300	2.1
AUPE133-20-36□□-□□	132.5	200	360	2.4
AUPE133-20-43□□-□□	132.5	200	430	2.7
AUPE133-25-16□□-□□	132.5	250	160	1.6
AUPE133-25-20□□-□□	132.5	250	200	1.8
AUPE133-25-25□□-□□	132.5	250	250	2.1
AUPE133-25-30□□-□□	132.5	250	300	2.4
AUPE133-25-36□□-□□	132.5	250	360	2.7
AUPE133-25-43□□-□□	132.5	250	430	3.1
AUPE133-30-16□□-□□	132.5	300	160	1.8
AUPE133-30-20□□-□□	132.5	300	200	2.1
AUPE133-30-25□□-□□	132.5	300	250	2.3
AUPE133-30-30□□-□□	132.5	300	300	2.6
AUPE133-30-36□□-□□	132.5	300	360	3.0
AUPE133-30-43□□-□□	132.5	300	430	3.4
AUPE133-30-50□□-□□	132.5	300	500	3.8
AUPE133-36-20□□-□□	132.5	360	200	2.3
AUPE133-36-25□□-□□	132.5	360	250	2.6
AUPE133-36-30□□-□□	132.5	360	300	3.0
AUPE133-36-36□□-□□	132.5	360	360	3.4
AUPE133-36-43□□-□□	132.5	360	430	3.8
AUPE133-36-50□□-□□	132.5	360	500	4.3
AUPE133-43-20□□-□□	132.5	430	200	2.7
AUPE133-43-25□□-□□	132.5	430	250	3.0
AUPE133-43-30□□-□□	132.5	430	300	3.4
AUPE133-43-36□□-□□	132.5	430	360	3.8
AUPE133-43-43□□-□□	132.5	430	430	4.3
AUPE133-43-50□□-□□	132.5	430	500	4.8
AUPE133-50-30□□-□□	132.5	500	300	3.8
AUPE133-50-36□□-□□	132.5	500	360	4.2
AUPE133-50-43□□-□□	132.5	500	430	4.8
AUPE133-50-50□□-□□	132.5	500	500	5.4

*Weight listed is calculated based on rubber feet selection.

AUX series ALUMINIUM CONTROL BOX

NEW

- Round corner designed aluminium control box with 4 extruded aluminium frames.
- A wide selection of 75 different sizes to choose from.
- Aluminium control box is suitable for use as industrial controller, machine controller, audio amplifier, power supply, and so on.
- Feet is selectable between adhesive rubber or aluminium type.

Included screws

- Top / Bottom cover
  M3-5 original trapezoid head (plus / hex) &
  Nickel plated / Black trivalent chromate x 8~16 pcs
- Frame
  M3-8 flat head & Nickel plated x 16 pcs
- Aluminium feet
  M4-8 bind head & Black trivalent chromate x 4 pcs

Redommended torque : 0.3 ~ 0.6N • m
* Recommended torque listed is for reference only; actual may differ
  Assemble after testing torque.

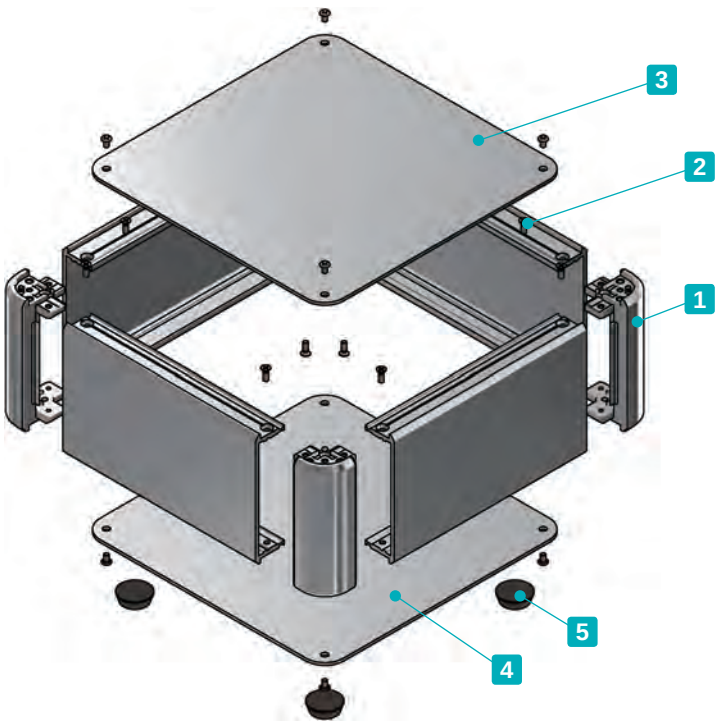

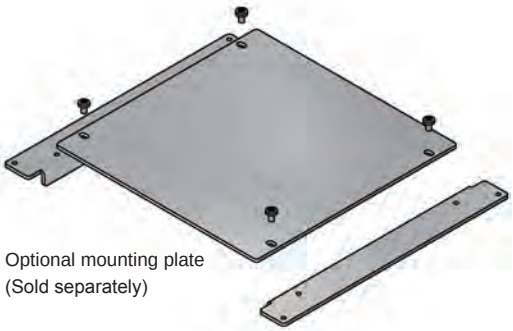

Optional mounting plate
(Sold separately)

Components

No.	Part name	Pcs	Material	Color / Finish
1	Corner block	4	Diecast aluminium ADC12	Silver • Black / Painted (Unfinished inside)
2	Frame	4	Extruded aluminium A6063S-T5	Silver • Black / Anodized
3	Top cover	1	Aluminium A1100P	Silver • Black / Anodized
4	Bottom cover	1	Aluminium A1100P	Silver • Black / Anodized
5	Adhesive Rubber feet : Aluminium feet	4	Synthetic rubber : Aluminium	Black : Silver • Black / Anodized

AUX dimensions

■ DXF/DWG/PDF/STP drawings available on our website.

■ Feet is selectable between rubber or aluminium type.
※Rubber and aluminium feet height are different.

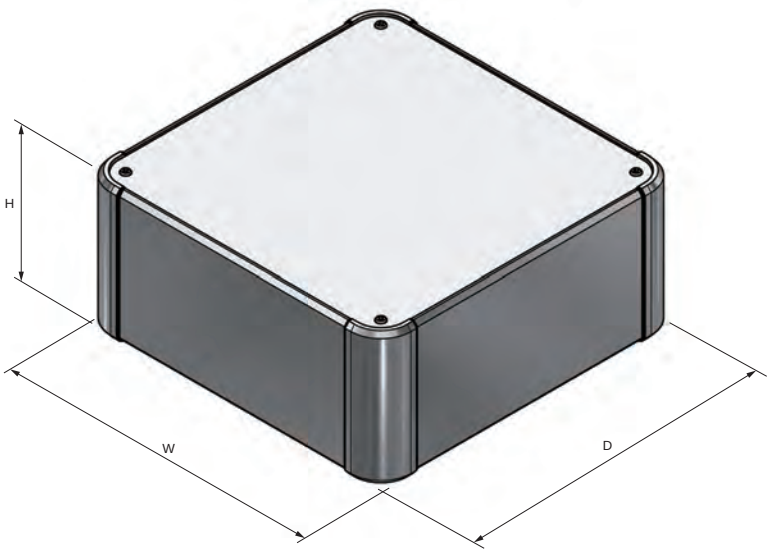

Rubber Feet

Aluminium Feet

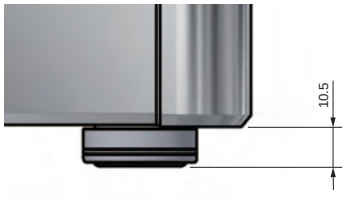

Accessories (Optional parts)

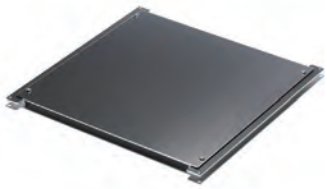

Mounting plate AUC series
See page 179 ~ 180

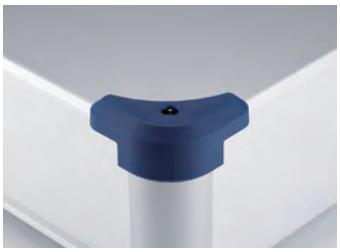

Corner guard AUCG series
See page 180

Elastomer carrying handle FM200
See website

Aluminium handle OH series
See website

Wall mount support arm MAR series
See page 181 ~ 182

To select Feet/Screw/Color types, follow steps 1 ~ 3 below.

1 Feet Type

*Color of "Aluminum feet" will be the same as bottom cover color.

R Adhesive Rubber (Black / Unfinished)

A Aluminium (Silver / Anodized) (Black / Anodized)

2 Screw Type

*Color of screw will be the same as top • bottom cover color.

P Plus (Silver / Nickel plated) (Black / Black trivalent chromate)

H Hex (Silver / Nickel plated) (Black / Black trivalent chromate)

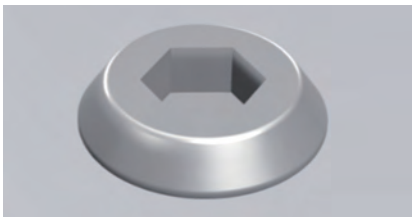

Hex wrench included.

3 Color Type

Please choose from the color combinations listed below.

S S

S B

B X

B B

To determine a product number, suffix Feet/Screw/Color code at the end of product number.

Product Number

AUX □ - □ - □ □ □ - □ □

H-W-D dimensions	1 Feet	2 Screw	3 Color
See page 166 for dimensions / product no.	R or A	P or H	SS • SB • BX • BB

Numbering example :
If looking at "H66 x W250 x D250mm, Feet type R, Screw type H, Color type BX"

➡ **AUX 66-25-25 RH-BX**

Product no. / Dimensions

■ Please suffix feet, screw, and color code at the end of the product number

Product no.	H	W	D	Weight (kg)
AUX 66-16-16□□-□□	66	160	160	0.9
AUX 66-20-16□□-□□	66	200	160	1.0
AUX 66-20-20□□-□□	66	200	200	1.1
AUX 66-25-16□□-□□	66	250	160	1.2
AUX 66-25-20□□-□□	66	250	200	1.3
AUX 66-25-25□□-□□	66	250	250	1.5
AUX 66-30-16□□-□□	66	300	160	1.3
AUX 66-30-20□□-□□	66	300	200	1.5
AUX 66-30-25□□-□□	66	300	250	1.7
AUX 66-30-30□□-□□	66	300	300	2.0
AUX 66-36-20□□-□□	66	360	200	1.7
AUX 66-36-25□□-□□	66	360	250	2.0
AUX 66-36-30□□-□□	66	360	300	2.2
AUX 66-36-36□□-□□	66	360	360	2.6
AUX 66-43-20□□-□□	66	430	200	2.0
AUX 66-43-25□□-□□	66	430	250	2.3
AUX 66-43-30□□-□□	66	430	300	2.6
AUX 66-43-36□□-□□	66	430	360	3.0
AUX 66-43-43□□-□□	66	430	430	3.4
AUX 66-50-30□□-□□	66	500	300	2.9
AUX 66-50-36□□-□□	66	500	360	3.3
AUX 66-50-43□□-□□	66	500	430	3.8
AUX 66-50-50□□-□□	66	500	500	4.3
AUX 66-60-36□□-□□	66	600	360	3.8
AUX 66-60-43□□-□□	66	600	430	4.4
AUX 88-16-16□□-□□	88	160	160	1.0
AUX 88-20-16□□-□□	88	200	160	1.1
AUX 88-20-20□□-□□	88	200	200	1.3
AUX 88-25-16□□-□□	88	250	160	1.3
AUX 88-25-20□□-□□	88	250	200	1.5
AUX 88-25-25□□-□□	88	250	250	1.7
AUX 88-30-16□□-□□	88	300	160	1.5
AUX 88-30-20□□-□□	88	300	200	1.7
AUX 88-30-25□□-□□	88	300	250	1.9
AUX 88-30-30□□-□□	88	300	300	2.2
AUX 88-36-20□□-□□	88	360	200	1.9
AUX 88-36-25□□-□□	88	360	250	2.2
AUX 88-36-30□□-□□	88	360	300	2.4
AUX 88-36-36□□-□□	88	360	360	2.8
AUX 88-43-20□□-□□	88	430	200	2.2
AUX 88-43-25□□-□□	88	430	250	2.5
AUX 88-43-30□□-□□	88	430	300	2.8
AUX 88-43-36□□-□□	88	430	360	3.2
AUX 88-43-43□□-□□	88	430	430	3.6
AUX 88-50-30□□-□□	88	500	300	3.2
AUX 88-50-36□□-□□	88	500	360	3.6
AUX 88-50-43□□-□□	88	500	430	4.1
AUX 88-50-50□□-□□	88	500	500	4.6
AUX 88-60-36□□-□□	88	600	360	4.1
AUX 88-60-43□□-□□	88	600	430	4.7

Product no.	H	W	D	Weight (kg)
AUX133-16-16□□-□□	132.5	160	160	1.3
AUX133-20-16□□-□□	132.5	200	160	1.5
AUX133-20-20□□-□□	132.5	200	200	1.7
AUX133-25-16□□-□□	132.5	250	160	1.7
AUX133-25-20□□-□□	132.5	250	200	1.9
AUX133-25-25□□-□□	132.5	250	250	2.2
AUX133-30-16□□-□□	132.5	300	160	1.9
AUX133-30-20□□-□□	132.5	300	200	2.1
AUX133-30-25□□-□□	132.5	300	250	2.4
AUX133-30-30□□-□□	132.5	300	300	2.7
AUX133-36-20□□-□□	132.5	360	200	2.4
AUX133-36-25□□-□□	132.5	360	250	2.7
AUX133-36-30□□-□□	132.5	360	300	3.1
AUX133-36-36□□-□□	132.5	360	360	3.4
AUX133-43-20□□-□□	132.5	430	200	2.8
AUX133-43-25□□-□□	132.5	430	250	3.1
AUX133-43-30□□-□□	132.5	430	300	3.5
AUX133-43-36□□-□□	132.5	430	360	3.9
AUX133-43-43□□-□□	132.5	430	430	4.4
AUX133-50-30□□-□□	132.5	500	300	3.9
AUX133-50-36□□-□□	132.5	500	360	4.4
AUX133-50-43□□-□□	132.5	500	430	4.9
AUX133-50-50□□-□□	132.5	500	500	5.5
AUX133-60-36□□-□□	132.5	600	360	5.0
AUX133-60-43□□-□□	132.5	600	430	5.7

*Weight listed is calculated based on rubber feet selection.

AUXE series EMC SHIELDED ALUMINIUM CONTROL BOX

NEW

EMC Shielding Effects

- Round corner designed aluminium enclosure with 4 extruded aluminium frames.
- Shielding gasket allows the enclosure to be EMC shielded.
- A wide selection of 75 different sizes to choose from.
- Feet is selectable between adhesive rubber or aluminium type.

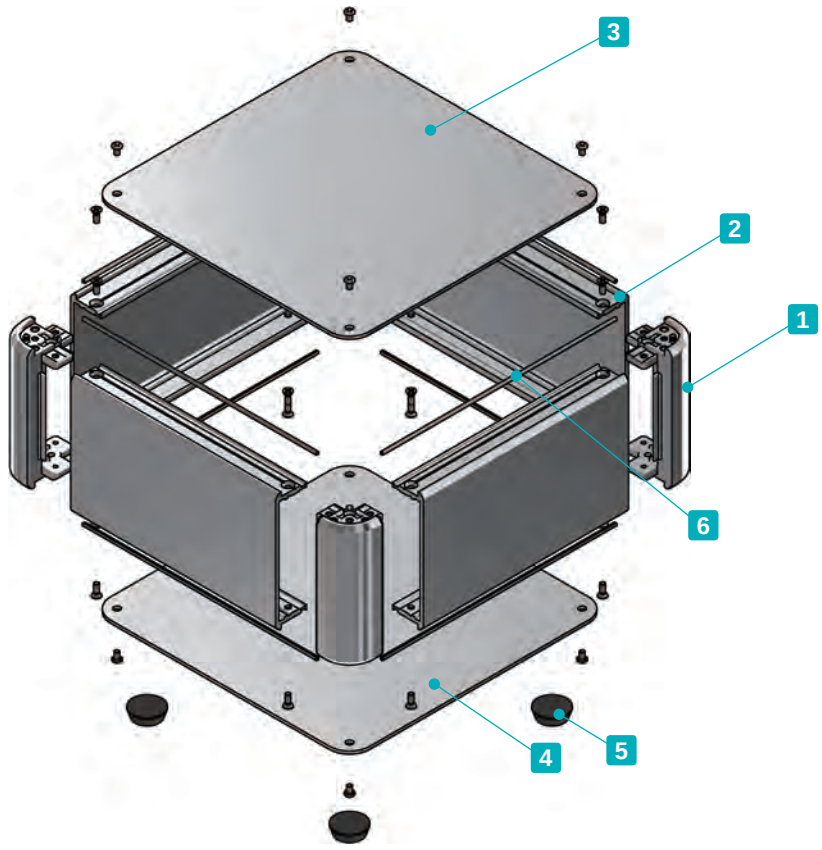

Included screws

- Top / Bottom cover
  M3-5 original trapezoid head (plus / hex) & Nickel plated x 8~16 pcs
- Frame
  M3-8 flat head & Nickel plated x 16 pcs
- Aluminium feet
  M4-8 bind head & Black trivalent chromate x 4 pcs

Recommended torque : 0.3 ~ 0.6N • m
* Recommended torque listed is for reference only; actual may differ.
Assemble after testing torque.

Components

No.	Part name	Pcs	Material	Color / Finish
1	Corner block	4	Diecast aluminium ADC12	Silver • Black / Painted (Unfinished inside)
2	Frame	4	Extruded aluminium A6063S-T5	Silver / Painted (Unfinished inside)
3	Top cover	1	Aluminium A1100P	Silver / Painted (Conductive inside)
4	Bottom cover	1	Aluminium A1100P	Silver / Painted (Conductive inside)
5	Adhesive Rubber feet : Aluminium feet	4	Synthetic rubber : Aluminium	Black : Silver / Anodized
6	EMC shielding gasket	8	Conductive fiber UL94V-0	Metallic gray

AUXE dimensions

■ DXF/DWG/PDF/STP drawings available on our website.

■ Feet is selectable between rubber or aluminium type.
※Rubber and aluminium feet height are different.

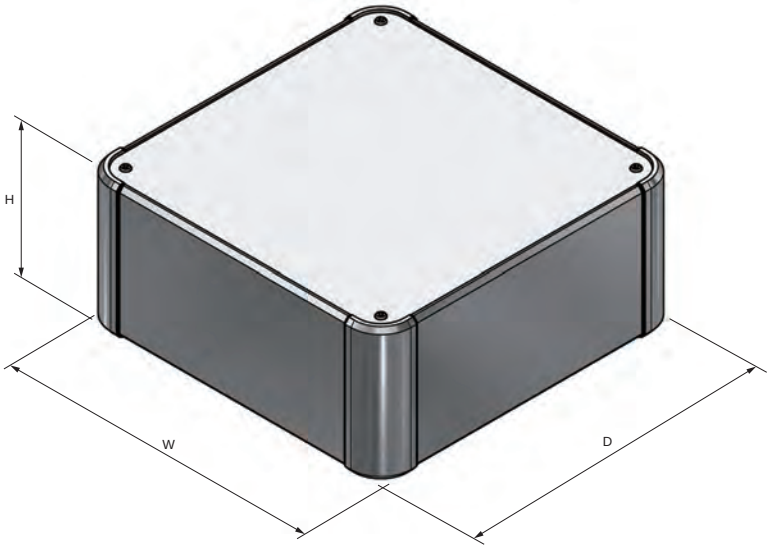

Rubber Feet

Aluminium Feet

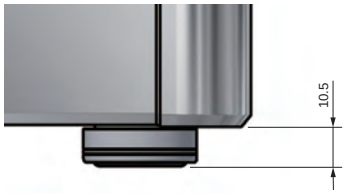

■ Install the EMC shielding gasket into the grooves on the frame and corner block.

Accessories (Optional parts)

Wall mount support arm MAR series
See page 181 ~ 182

Mounting plate AUC series
See page 179 ~ 180

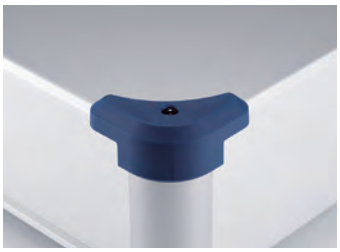

Corner guard AUCG series
See page 180

Elastomer carrying handle FM200
See website

Aluminium handle OH series
See website

To select Feet/Screw/Color types, follow steps 1 ~ 3 below.

1 Feet Type

R Adhesive Rubber (Black / Unfinished)

A Aluminium (Silver / Anodized)

2 Screw Type

P Plus (Silver / Nickel plated)

H Hex (Silver / Nickel plated)

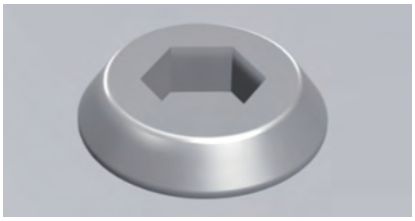

Hex wrench included.

3 Color Type

Please choose from the color combinations listed below.

S S

S B

To determine a product number, suffix Feet/Screw/Color code at the end of product number.

Product Number

AUXE □ - □ - □ □ □ - □ □

H-W-D dimensions	1 Feet	2 Screw	3 Color
See page 170 for dimensions / product no.	R or A	P or H	SS • SB

Numbering example :
If looking at "H133 x W300 x D300mm, Feet type R, Screw type P, Color type SB"

➡ **AUXE 133-30-30 RP-SB**

Product no. / Dimensions

■ Please suffix feet, screw, and color code at the end of the product number

Product no.	H	W	D	Weight (kg)
AUXE 66-16-16□□-□□	66	160	160	0.9
AUXE 66-20-16□□-□□	66	200	160	1.0
AUXE 66-20-20□□-□□	66	200	200	1.1
AUXE 66-25-16□□-□□	66	250	160	1.2
AUXE 66-25-20□□-□□	66	250	200	1.3
AUXE 66-25-25□□-□□	66	250	250	1.5
AUXE 66-30-16□□-□□	66	300	160	1.3
AUXE 66-30-20□□-□□	66	300	200	1.5
AUXE 66-30-25□□-□□	66	300	250	1.7
AUXE 66-30-30□□-□□	66	300	300	2.0
AUXE 66-36-20□□-□□	66	360	200	1.7
AUXE 66-36-25□□-□□	66	360	250	2.0
AUXE 66-36-30□□-□□	66	360	300	2.2
AUXE 66-36-36□□-□□	66	360	360	2.6
AUXE 66-43-20□□-□□	66	430	200	2.0
AUXE 66-43-25□□-□□	66	430	250	2.3
AUXE 66-43-30□□-□□	66	430	300	2.6
AUXE 66-43-36□□-□□	66	430	360	3.0
AUXE 66-43-43□□-□□	66	430	430	3.4
AUXE 66-50-30□□-□□	66	500	300	2.9
AUXE 66-50-36□□-□□	66	500	360	3.3
AUXE 66-50-43□□-□□	66	500	430	3.8
AUXE 66-50-50□□-□□	66	500	500	4.3
AUXE 66-60-36□□-□□	66	600	360	3.9
AUXE 66-60-43□□-□□	66	600	430	4.4
AUXE 88-16-16□□-□□	88	160	160	1.0
AUXE 88-20-16□□-□□	88	200	160	1.1
AUXE 88-20-20□□-□□	88	200	200	1.3
AUXE 88-25-16□□-□□	88	250	160	1.3
AUXE 88-25-20□□-□□	88	250	200	1.5
AUXE 88-25-25□□-□□	88	250	250	1.7
AUXE 88-30-16□□-□□	88	300	160	1.5
AUXE 88-30-20□□-□□	88	300	200	1.7
AUXE 88-30-25□□-□□	88	300	250	1.9
AUXE 88-30-30□□-□□	88	300	300	2.2
AUXE 88-36-20□□-□□	88	360	200	1.9
AUXE 88-36-25□□-□□	88	360	250	2.2
AUXE 88-36-30□□-□□	88	360	300	2.5
AUXE 88-36-36□□-□□	88	360	360	2.8
AUXE 88-43-20□□-□□	88	430	200	2.2
AUXE 88-43-25□□-□□	88	430	250	2.5
AUXE 88-43-30□□-□□	88	430	300	2.8
AUXE 88-43-36□□-□□	88	430	360	3.2
AUXE 88-43-43□□-□□	88	430	430	3.6
AUXE 88-50-30□□-□□	88	500	300	3.2
AUXE 88-50-36□□-□□	88	500	360	3.6
AUXE 88-50-43□□-□□	88	500	430	4.1
AUXE 88-50-50□□-□□	88	500	500	4.6
AUXE 88-60-36□□-□□	88	600	360	4.2
AUXE 88-60-43□□-□□	88	600	430	4.7

Product no.	H	W	D	Weight (kg)
AUXE133-16-16□□-□□	132.5	160	160	1.3
AUXE133-20-16□□-□□	132.5	200	160	1.5
AUXE133-20-20□□-□□	132.5	200	200	1.7
AUXE133-25-16□□-□□	132.5	250	160	1.7
AUXE133-25-20□□-□□	132.5	250	200	1.9
AUXE133-25-25□□-□□	132.5	250	250	2.2
AUXE133-30-16□□-□□	132.5	300	160	1.9
AUXE133-30-20□□-□□	132.5	300	200	2.1
AUXE133-30-25□□-□□	132.5	300	250	2.4
AUXE133-30-30□□-□□	132.5	300	300	2.7
AUXE133-36-20□□-□□	132.5	360	200	2.4
AUXE133-36-25□□-□□	132.5	360	250	2.7
AUXE133-36-30□□-□□	132.5	360	300	3.1
AUXE133-36-36□□-□□	132.5	360	360	3.5
AUXE133-43-20□□-□□	132.5	430	200	2.8
AUXE133-43-25□□-□□	132.5	430	250	3.1
AUXE133-43-30□□-□□	132.5	430	300	3.5
AUXE133-43-36□□-□□	132.5	430	360	3.9
AUXE133-43-43□□-□□	132.5	430	430	4.4
AUXE133-50-30□□-□□	132.5	500	300	3.9
AUXE133-50-36□□-□□	132.5	500	360	4.4
AUXE133-50-43□□-□□	132.5	500	430	5.0
AUXE133-50-50□□-□□	132.5	500	500	5.5
AUXE133-60-36□□-□□	132.5	600	360	5.0
AUXE133-60-43□□-□□	132.5	600	430	5.7

*Weight listed is calculated based on rubber feet selection.

AUG series ALUMINIUM ENCLOSURE with CORNER GUARD

NEW

- Rugged design aluminium enclosure with TPE (Elastomer) corner guards.
  Corner guards also act as non-slip rubber feet.
- A large selection of 117 different sizes to choose from.
- A total of 8 selectable color combinations with 4 corner guard colors - Black, Gray, Navy and Red - and 2 enclosure colors - Silver and Black anodized.
- Versatile aluminium case suitable for use as measuring instrument, controller, industrial embedded computer, power supply, audio amplifier, and so on.

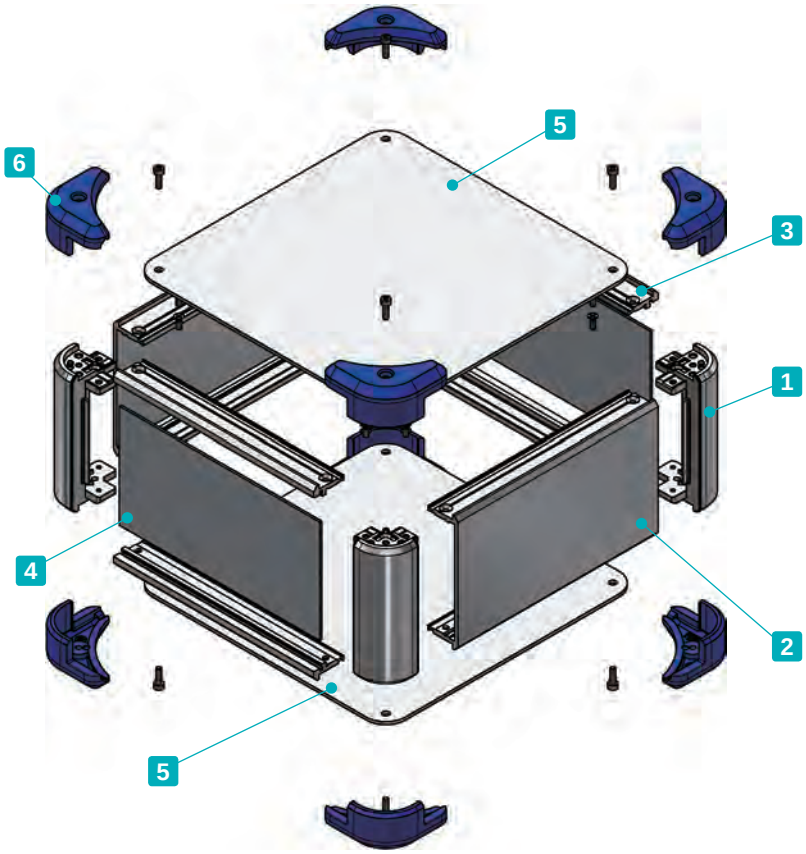

Included screws

- Top / Bottom cover (not applicable to some models)
  M3-5 original trapezoid head (hex) &
  Nickel plated / Black trivalent chromate x 4~8 pcs
- Frame / Panel support frame
  M3-8 flat head & Nickel plated x 16 pcs
- Corner guard
  M3-10 hex & Black trivalent chromate x 8 pcs
  * Hex wrench included.

Recommended torque : M3 -10 hex - 0.2N • m
Other screws - 0.3 ~ 0.6N • m

* Recommended torque listed is for reference only; actual may differ.
  Assemble after testing torque.

Components

No.	Part name	Pcs	Material	Color / Finish
1	Corner block	4	Diecast aluminium ADC12	Silver • Black / Painted (Unfinished inside)
2	Frame	2	Extruded aluminium A6063S-T5	Silver • Black / Anodized
3	Panel support frame	4	Extruded aluminium A6063S-T5	Silver • Black / Anodized
4	Panel	2	Aluminium A1100P	Silver • Black / Anodized
5	Top • bottom cover	2	Aluminium A1100P	Silver • Black / Anodized
6	Corner guard	8	TPE (Elastomer)	Black • Gray • Navy • Red

AUG dimensions

■ DXF/DWG/PDF/STP drawings available on our website.

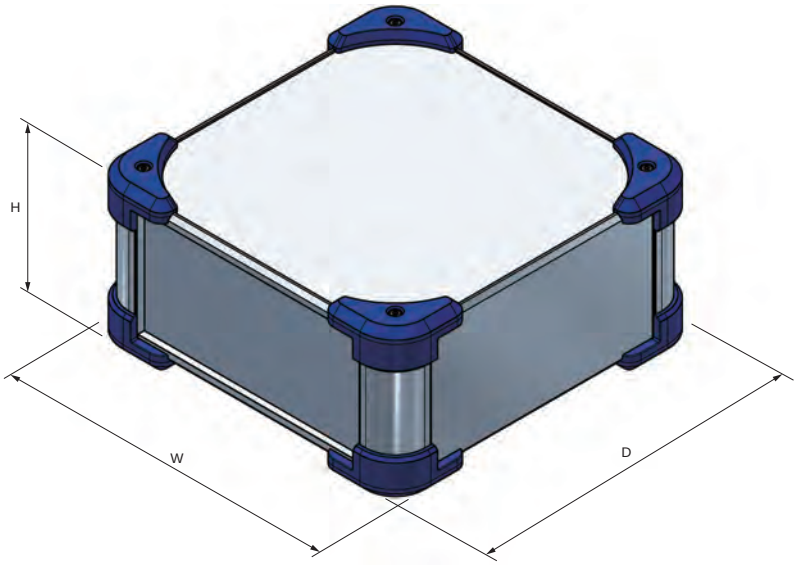

■ Mounting of a PCB or optional mounting plate is made easy through the use of the through-holes inside the aluminium diecast corner block.
See page 180 for how to install mounting plate.

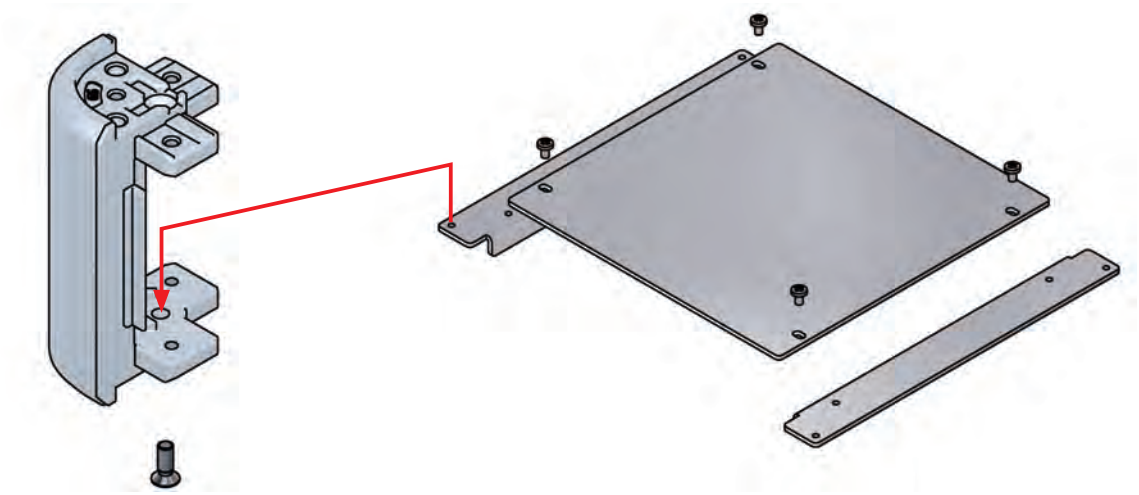

Accessories (Optional parts)

Mounting plate AUC series
See page 179 ~ 180

Elastomer carrying handle FM200
See website

Tilt leg TLW series
See page 222

Color Type

Please choose from the color combinations listed below.

S B (Silver / Black)

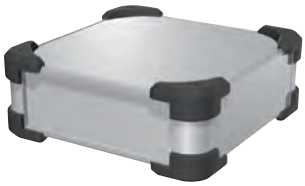

S G (Silver / Gray)

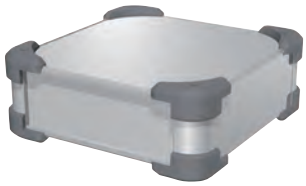

S N (Silver / Navy)

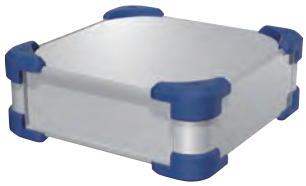

S R (Silver / Red)

B B (Black / Black)

B G (Black / Gray)

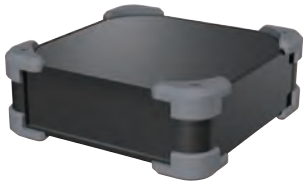

B N (Black / Navy)

B R (Black / Red)

Product Number To determine a product number, please suffix Color code at the end of product number.

AUG □ - □ - □ - □□

H-W-D dimensions

See page 174 for dimensions / product no.

Color

SB • SG • SN • SR
BB • BG • BN • BR

Numbering example :
If looking at "H88 x W308 x D208mm, Color type BR"

➡ **AUG 88-30-20-BR**

Product no. / Dimensions

■ Please suffix color code at the end of the product number.

Product no.	H	W	D	Weight (kg)
AUG 66-16-16-□□	78	168	168	0.9
AUG 66-16-20-□□	78	168	208	1.0
AUG 66-16-25-□□	78	168	258	1.2
AUG 66-16-30-□□	78	168	308	1.3
AUG 66-20-16-□□	78	208	168	1.0
AUG 66-20-20-□□	78	208	208	1.2
AUG 66-20-25-□□	78	208	258	1.3
AUG 66-20-30-□□	78	208	308	1.5
AUG 66-20-36-□□	78	208	368	1.7
AUG 66-20-43-□□	78	208	438	2.0
AUG 66-25-16-□□	78	258	168	1.2
AUG 66-25-20-□□	78	258	208	1.3
AUG 66-25-25-□□	78	258	258	1.5
AUG 66-25-30-□□	78	258	308	1.7
AUG 66-25-36-□□	78	258	368	2.0
AUG 66-25-43-□□	78	258	438	2.3
AUG 66-30-16-□□	78	308	168	1.3
AUG 66-30-20-□□	78	308	208	1.5
AUG 66-30-25-□□	78	308	258	1.7
AUG 66-30-30-□□	78	308	308	2.0
AUG 66-30-36-□□	78	308	368	2.2
AUG 66-30-43-□□	78	308	438	2.6
AUG 66-30-50-□□	78	308	508	2.9
AUG 66-36-20-□□	78	368	208	1.7
AUG 66-36-25-□□	78	368	258	2.0
AUG 66-36-30-□□	78	368	308	2.2
AUG 66-36-36-□□	78	368	368	2.5
AUG 66-36-43-□□	78	368	438	2.9
AUG 66-36-50-□□	78	368	508	3.3
AUG 66-43-20-□□	78	438	208	2.0
AUG 66-43-25-□□	78	438	258	2.3
AUG 66-43-30-□□	78	438	308	2.6
AUG 66-43-36-□□	78	438	368	2.9
AUG 66-43-43-□□	78	438	438	3.3
AUG 66-43-50-□□	78	438	508	3.8
AUG 66-50-30-□□	78	508	308	2.9
AUG 66-50-36-□□	78	508	368	3.3
AUG 66-50-43-□□	78	508	438	3.8
AUG 66-50-50-□□	78	508	508	4.2
AUG 88-16-16-□□	100	168	168	1.0
AUG 88-16-20-□□	100	168	208	1.1
AUG 88-16-25-□□	100	168	258	1.3
AUG 88-16-30-□□	100	168	308	1.5
AUG 88-20-16-□□	100	208	168	1.1
AUG 88-20-20-□□	100	208	208	1.3
AUG 88-20-25-□□	100	208	258	1.5
AUG 88-20-30-□□	100	208	308	1.7
AUG 88-20-36-□□	100	208	368	1.9
AUG 88-20-43-□□	100	208	438	2.2
AUG 88-25-16-□□	100	258	168	1.3
AUG 88-25-20-□□	100	258	208	1.5
AUG 88-25-25-□□	100	258	258	1.7
AUG 88-25-30-□□	100	258	308	1.9
AUG 88-25-36-□□	100	258	368	2.2
AUG 88-25-43-□□	100	258	438	2.5
AUG 88-30-16-□□	100	308	168	1.4
AUG 88-30-20-□□	100	308	208	1.6
AUG 88-30-25-□□	100	308	258	1.9
AUG 88-30-30-□□	100	308	308	2.1

Product no.	H	W	D	Weight (kg)
AUG 88-30-36-□□	100	308	368	2.4
AUG 88-30-43-□□	100	308	438	2.8
AUG 88-30-50-□□	100	308	508	3.1
AUG 88-36-20-□□	100	368	208	1.8
AUG 88-36-25-□□	100	368	258	2.1
AUG 88-36-30-□□	100	368	308	2.4
AUG 88-36-36-□□	100	368	368	2.7
AUG 88-36-43-□□	100	368	438	3.2
AUG 88-36-50-□□	100	368	508	3.5
AUG 88-43-20-□□	100	438	208	2.1
AUG 88-43-25-□□	100	438	258	2.4
AUG 88-43-30-□□	100	438	308	2.8
AUG 88-43-36-□□	100	438	368	3.1
AUG 88-43-43-□□	100	438	438	3.6
AUG 88-43-50-□□	100	438	508	4.0
AUG 88-50-30-□□	100	508	308	3.1
AUG 88-50-36-□□	100	508	368	3.5
AUG 88-50-43-□□	100	508	438	4.0
AUG 88-50-50-□□	100	508	508	4.5
AUG133-16-16-□□	144.5	168	168	1.2
AUG133-16-20-□□	144.5	168	208	1.4
AUG133-16-25-□□	144.5	168	258	1.6
AUG133-16-30-□□	144.5	168	308	1.8
AUG133-20-16-□□	144.5	208	168	1.4
AUG133-20-20-□□	144.5	208	208	1.6
AUG133-20-25-□□	144.5	208	258	1.8
AUG133-20-30-□□	144.5	208	308	2.0
AUG133-20-36-□□	144.5	208	368	2.3
AUG133-20-43-□□	144.5	208	438	2.7
AUG133-25-16-□□	144.5	258	168	1.5
AUG133-25-20-□□	144.5	258	208	1.8
AUG133-25-25-□□	144.5	258	258	2.0
AUG133-25-30-□□	144.5	258	308	2.3
AUG133-25-36-□□	144.5	258	368	2.6
AUG133-25-43-□□	144.5	258	438	3.0
AUG133-30-16-□□	144.5	308	168	1.7
AUG133-30-20-□□	144.5	308	208	2.0
AUG133-30-25-□□	144.5	308	258	2.2
AUG133-30-30-□□	144.5	308	308	2.5
AUG133-30-36-□□	144.5	308	368	2.9
AUG133-30-43-□□	144.5	308	438	3.3
AUG133-30-50-□□	144.5	308	508	3.7
AUG133-36-20-□□	144.5	368	208	2.2
AUG133-36-25-□□	144.5	368	258	2.5
AUG133-36-30-□□	144.5	368	308	2.8
AUG133-36-36-□□	144.5	368	368	3.2
AUG133-36-43-□□	144.5	368	438	3.7
AUG133-36-50-□□	144.5	368	508	4.2
AUG133-43-20-□□	144.5	438	208	2.5
AUG133-43-25-□□	144.5	438	258	2.9
AUG133-43-30-□□	144.5	438	308	3.2
AUG133-43-36-□□	144.5	438	368	3.6
AUG133-43-43-□□	144.5	438	438	4.2
AUG133-43-50-□□	144.5	438	508	4.7
AUG133-50-30-□□	144.5	508	308	3.6
AUG133-50-36-□□	144.5	508	368	4.0
AUG133-50-43-□□	144.5	508	438	4.6
AUG133-50-50-□□	144.5	508	508	5.2

AUGE series EMC SHIELDED ALUMINIUM ENCLOSURE with CORNER GUARD

NEW

EMC Shielding Effects

- Shielding gasket allows the enclosure to be EMC shielded.
- Rugged design EMC shielded aluminium enclosure with TPE (Elastomer) corner guards.
  Corner guards also act as non-slip rubber feet.
- Suitable to be used as an easy maintenance desktop case due to its detachable front/rear panels.
  Captive screws allow for ease of maintenance as there is little risk of the screws dropping out and getting lost.
- A large selection of 117 different sizes to choose from.
- A total of 4 selectable color combinations with a silver anodized body and 4 corner guard colors - Black, Gray, Navy and Red.

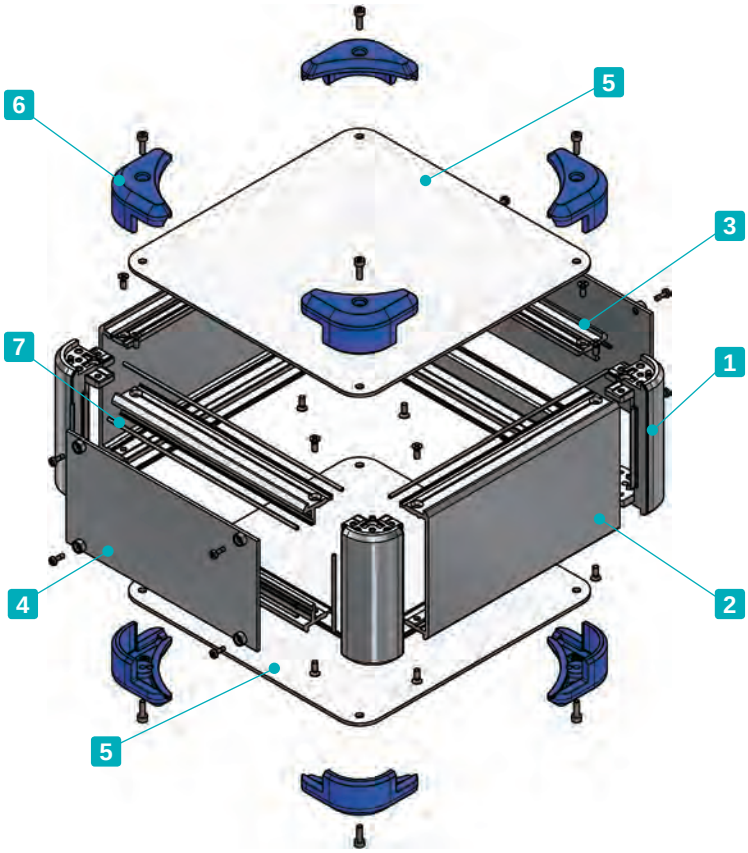

Included screws :

- Top / Bottom cover (not applicable to some models)
  M3-5 original trapezoid head (hex) & Nickel plated x 4~8 pcs
- Frame / Panel support frame
  M3-8 flat head & Nickel plated x 16 pcs
- Corner guard
  M3-10 hex & Black trivalent chromate x 8 pcs
  * Hex wrench included.
- Panel
  Captive M2.5-7 pan head & Nickel plated x 8~12 pcs

Recommended torque :
- M3 -10 hex - 0.2N • m
- M2.5-7 pan head - 0.15 ~ 0.2N • m
- Other screws - 0.3 ~ 0.6N • m

* Recommended torque listed is for reference only; actual may differ.
  Assemble after testing torque.

Components

No.	Part name	Pcs	Material	Color / Finish
1	Corner block	4	Diecast aluminium ADC12	Silver / Painted (Unfinished inside)
2	Frame	2	Extruded aluminium A6063S-T5	Silver / Painted (Unfinished inside)
3	Panel support frame	4	Extruded aluminium A6063S-T5	Silver / Painted (Unfinished inside)
4	Panel	2	Aluminium A1100P	Silver / Painted (Conductive inside)
5	Top • bottom cover	2	Aluminium A1100P	Silver / Painted (Conductive inside)
6	Corner guard	8	TPE (Elastomer)	Black • Gray • Navy • Red
7	EMC shielding gasket	16	Conductive fiber UL94V-0	Metallic gray

AUGE dimensions

■ DXF/DWG/PDF/STP drawings available on our website.

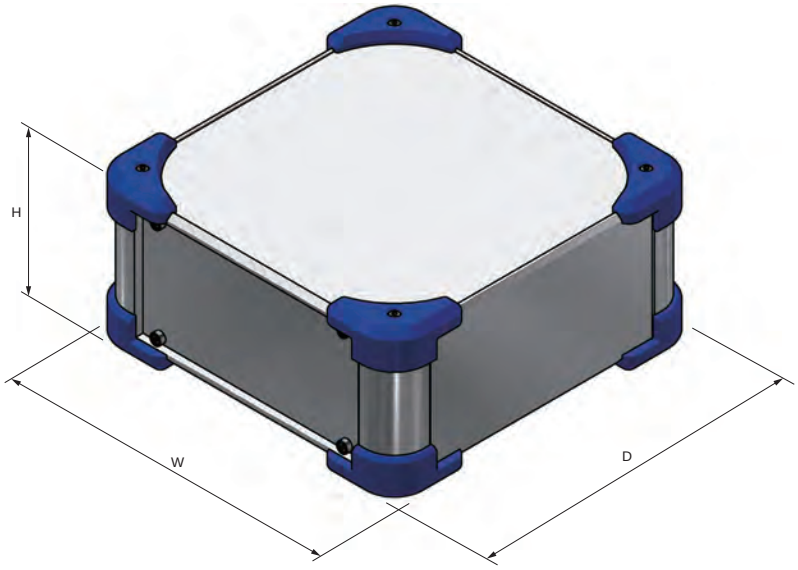

■ Install the EMC shielding gasket into the grooves on the frame, panel support frame, and corner block.

Frame

Panel support frame

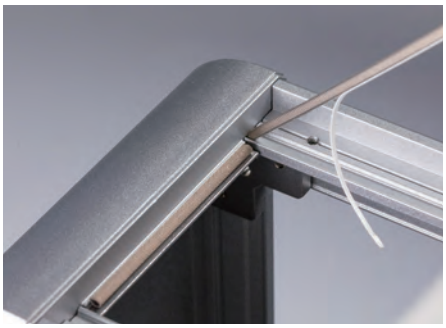

Corner block

Accessories (Optional parts)

Mounting plate AUC series
See page 179 ~ 180

Elastomer carrying handle FM200
See website

Tilt leg TLW series
See page 222

EMC shielding fan filter EMF series
See website

Color Type

Please choose from the color combinations listed below.

S B (Silver / Black)

S G (Silver / Gray)

S N (Silver / Navy)

S R (Silver / Red)

Product Number To determine a product number, please suffix Color code at the end of product number.

AUGE □ - □ - □ - □□

H-W-D dimensions

See page 178 for dimensions / product no.

Color

SB • SG • SN • SR

Numbering example :
If looking at "H133 x W438 x D308mm, Color type SN"

➡ **AUGE 133-43-30-SN**

Product no. / Dimensions

■ Please suffix color code at the end of the product number.

Product no.	H	W	D	Weight (kg)
AUGE 66-16-16-□□	78	168	168	0.9
AUGE 66-16-20-□□	78	168	208	1.1
AUGE 66-16-25-□□	78	168	258	1.2
AUGE 66-16-30-□□	78	168	308	1.4
AUGE 66-20-16-□□	78	208	168	1.1
AUGE 66-20-20-□□	78	208	208	1.2
AUGE 66-20-25-□□	78	208	258	1.4
AUGE 66-20-30-□□	78	208	308	1.6
AUGE 66-20-36-□□	78	208	368	1.8
AUGE 66-20-43-□□	78	208	438	2.1
AUGE 66-25-16-□□	78	258	168	1.2
AUGE 66-25-20-□□	78	258	208	1.4
AUGE 66-25-25-□□	78	258	258	1.6
AUGE 66-25-30-□□	78	258	308	1.8
AUGE 66-25-36-□□	78	258	368	2.0
AUGE 66-25-43-□□	78	258	438	2.4
AUGE 66-30-16-□□	78	308	168	1.4
AUGE 66-30-20-□□	78	308	208	1.6
AUGE 66-30-25-□□	78	308	258	1.8
AUGE 66-30-30-□□	78	308	308	2.0
AUGE 66-30-36-□□	78	308	368	2.3
AUGE 66-30-43-□□	78	308	438	2.7
AUGE 66-30-50-□□	78	308	508	3.0
AUGE 66-36-20-□□	78	368	208	1.8
AUGE 66-36-25-□□	78	368	258	2.1
AUGE 66-36-30-□□	78	368	308	2.3
AUGE 66-36-36-□□	78	368	368	2.6
AUGE 66-36-43-□□	78	368	438	3.0
AUGE 66-36-50-□□	78	368	508	3.4
AUGE 66-43-20-□□	78	438	208	2.1
AUGE 66-43-25-□□	78	438	258	2.4
AUGE 66-43-30-□□	78	438	308	2.7
AUGE 66-43-36-□□	78	438	368	3.0
AUGE 66-43-43-□□	78	438	438	3.5
AUGE 66-43-50-□□	78	438	508	3.9
AUGE 66-50-30-□□	78	508	308	3.0
AUGE 66-50-36-□□	78	508	368	3.4
AUGE 66-50-43-□□	78	508	438	3.9
AUGE 66-50-50-□□	78	508	508	4.4
AUGE 88-16-16-□□	100	168	168	1.0
AUGE 88-16-20-□□	100	168	208	1.2
AUGE 88-16-25-□□	100	168	258	1.4
AUGE 88-16-30-□□	100	168	308	1.5
AUGE 88-20-16-□□	100	208	168	1.2
AUGE 88-20-20-□□	100	208	208	1.3
AUGE 88-20-25-□□	100	208	258	1.5
AUGE 88-20-30-□□	100	208	308	1.7
AUGE 88-20-36-□□	100	208	368	1.9
AUGE 88-20-43-□□	100	208	438	2.2
AUGE 88-25-16-□□	100	258	168	1.4
AUGE 88-25-20-□□	100	258	208	1.5
AUGE 88-25-25-□□	100	258	258	1.7
AUGE 88-25-30-□□	100	258	308	2.0
AUGE 88-25-36-□□	100	258	368	2.2
AUGE 88-25-43-□□	100	258	438	2.6
AUGE 88-30-16-□□	100	308	168	1.5
AUGE 88-30-20-□□	100	308	208	1.7
AUGE 88-30-25-□□	100	308	258	2.0
AUGE 88-30-30-□□	100	308	308	2.2

Product no.	H	W	D	Weight (kg)
AUGE 88-30-36-□□	100	308	368	2.5
AUGE 88-30-43-□□	100	308	438	2.9
AUGE 88-30-50-□□	100	308	508	3.2
AUGE 88-36-20-□□	100	368	208	2.0
AUGE 88-36-25-□□	100	368	258	2.2
AUGE 88-36-30-□□	100	368	308	2.5
AUGE 88-36-36-□□	100	368	368	2.8
AUGE 88-36-43-□□	100	368	438	3.3
AUGE 88-36-50-□□	100	368	508	3.7
AUGE 88-43-20-□□	100	438	208	2.3
AUGE 88-43-25-□□	100	438	258	2.6
AUGE 88-43-30-□□	100	438	308	2.9
AUGE 88-43-36-□□	100	438	368	3.3
AUGE 88-43-43-□□	100	438	438	3.7
AUGE 88-43-50-□□	100	438	508	4.2
AUGE 88-50-30-□□	100	508	308	3.2
AUGE 88-50-36-□□	100	508	368	3.7
AUGE 88-50-43-□□	100	508	438	4.2
AUGE 88-50-50-□□	100	508	508	4.7
AUGE133-16-16-□□	144.5	168	168	1.3
AUGE133-16-20-□□	144.5	168	208	1.5
AUGE133-16-25-□□	144.5	168	258	1.7
AUGE133-16-30-□□	144.5	168	308	1.9
AUGE133-20-16-□□	144.5	208	168	1.4
AUGE133-20-20-□□	144.5	208	208	1.6
AUGE133-20-25-□□	144.5	208	258	1.9
AUGE133-20-30-□□	144.5	208	308	2.1
AUGE133-20-36-□□	144.5	208	368	2.4
AUGE133-20-43-□□	144.5	208	438	2.8
AUGE133-25-16-□□	144.5	258	168	1.6
AUGE133-25-20-□□	144.5	258	208	1.9
AUGE133-25-25-□□	144.5	258	258	2.1
AUGE133-25-30-□□	144.5	258	308	2.4
AUGE133-25-36-□□	144.5	258	368	2.7
AUGE133-25-43-□□	144.5	258	438	3.1
AUGE133-30-16-□□	144.5	308	168	1.8
AUGE133-30-20-□□	144.5	308	208	2.1
AUGE133-30-25-□□	144.5	308	258	2.4
AUGE133-30-30-□□	144.5	308	308	2.7
AUGE133-30-36-□□	144.5	308	368	3.0
AUGE133-30-43-□□	144.5	308	438	3.4
AUGE133-30-50-□□	144.5	308	508	3.8
AUGE133-36-20-□□	144.5	368	208	2.3
AUGE133-36-25-□□	144.5	368	258	2.7
AUGE133-36-30-□□	144.5	368	308	3.0
AUGE133-36-36-□□	144.5	368	368	3.4
AUGE133-36-43-□□	144.5	368	438	3.9
AUGE133-36-50-□□	144.5	368	508	4.3
AUGE133-43-20-□□	144.5	438	208	2.7
AUGE133-43-25-□□	144.5	438	258	3.0
AUGE133-43-30-□□	144.5	438	308	3.4
AUGE133-43-36-□□	144.5	438	368	3.8
AUGE133-43-43-□□	144.5	438	438	4.3
AUGE133-43-50-□□	144.5	438	508	4.9
AUGE133-50-30-□□	144.5	508	308	3.8
AUGE133-50-36-□□	144.5	508	368	4.3
AUGE133-50-43-□□	144.5	508	438	4.8
AUGE133-50-50-□□	144.5	508	508	5.4

AUC series MOUNTING PLATE for AU□ series

NEW

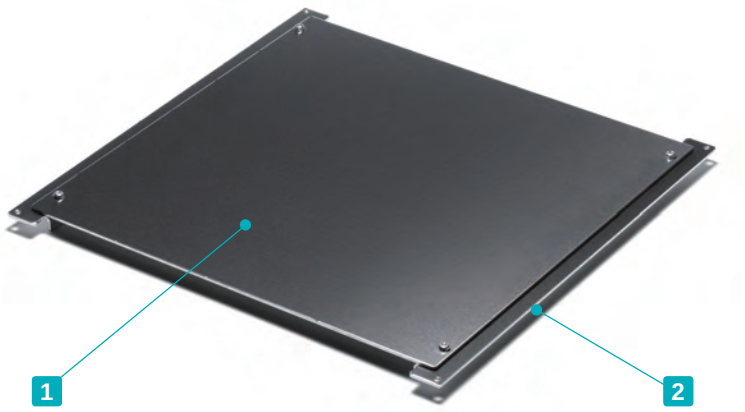

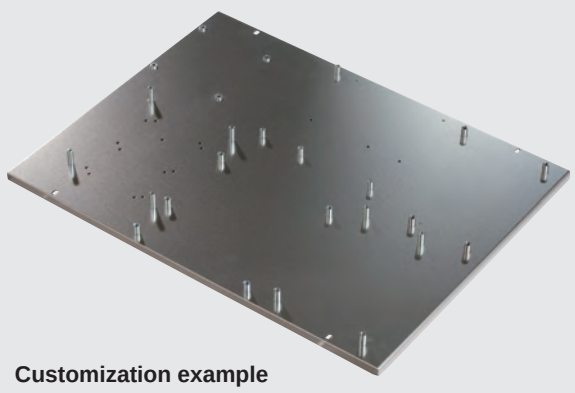

Customization example

■ See page CUSTOM-9 ~ CUSTOM-11 and our website for further details.

■ Mounting plate for AU, AUP, AUPE, AUX, AUXE, AUG and AUGE series.

Components

No.	Part name	Pcs	Material	Finish
1	Mounting plate	1	Aluminium A1050P t=2.0	Unfinished
2	L-bracket	2	Aluminium A1050P t=2.0	Unfinished

Included screw :
- Corner block M3 flat head : Nickel plated x 4
- Mounting plate M3-5 pan head : Trivalent chromate x 4

■ DXF/DWG/PDF drawings available on our website.

AUC dimensions

Non-reinforced (N) type

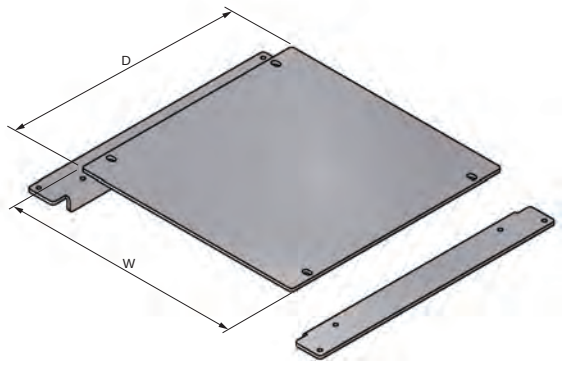

Reinforced (Y) type

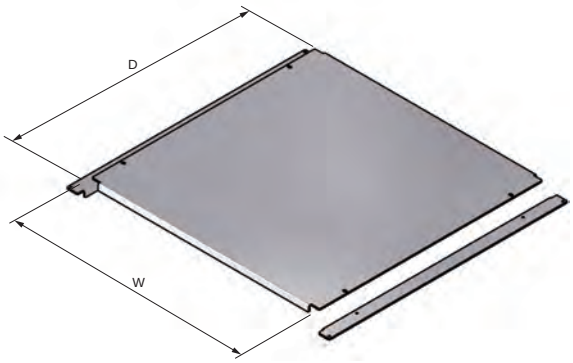

Product no. / Dimensions

Product no.	W	D	Enclosure W x D	Reinforcement	Weight (g)
AUC16-16	108	108	160×160	N	102
AUC16-20	108	148	160×200	N	138
AUC16-25	108	198	160×250	N	181
AUC16-30	108	248	160×300	N	226
AUC20-16	148	108	200×160	N	126
AUC20-20	148	148	200×200	N	170
AUC20-25	148	198	200×250	N	224
AUC20-30	148	248	200×300	N	279
AUC20-36	148	308	200×360	N	345
AUC20-43	148	378	200×430	N	422
AUC25-16	198	108	250×160	N	155
AUC25-20	198	148	250×200	N	210
AUC25-25	198	198	250×250	N	278
AUC25-30	198	248	250×300	N	346
AUC25-36	198	308	250×360	N	428
AUC25-43	198	378	250×430	N	524
AUC30-16	248	108	300×160	N	184
AUC30-20	248	148	300×200	N	249
AUC30-25	248	198	300×250	N	331
AUC30-30	248	248	300×300	N	413
AUC30-36	248	308	300×360	N	512

Product no.	W	D	Enclosure W x D	Reinforcement	Weight (g)
AUC30-43	248	378	300×430	N	626
AUC30-50	248	448	300×500	N	741
AUC36-20	308	148	360×200	N	297
AUC36-25	308	198	360×250	N	395
AUC36-30	308	248	360×300	N	494
AUC36-36	308	308	360×360	N	581
AUC36-43	308	378	360×430	N	749
AUC36-50	308	448	360×500	N	886
AUC43-20	378	148	430×200	Y	353
AUC43-25	378	198	430×250	Y	470
AUC43-30	378	248	430×300	Y	587
AUC43-36	378	308	430×360	Y	728
AUC43-43	378	378	430×430	Y	918
AUC43-50	378	448	430×500	Y	1,082
AUC50-30	448	248	500×300	Y	681
AUC50-36	448	308	500×360	Y	814
AUC50-43	448	378	500×430	Y	1,061
AUC50-50	448	448	500×500	Y	1,257
AUC60-36	548	308	600×360	Y	1,021
AUC60-43	548	378	600×430	Y	1,279

How to install AUC mounting plate

1. Install L-bracket onto countersunk screw hole on corner block.

2. Install mounting plate onto L-bracket with screws.

AUCG series CORNER GUARD for AU□ series

NEW

AUCG dimensions

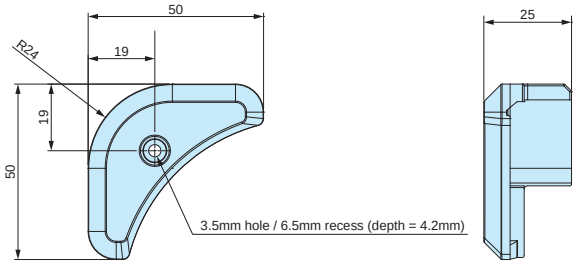

■ DXF/DWG/PDF drawings available on our website.

■ Spare corner guard for AUG and AUGE series. AUCG corner guard can also be installed on AU, AUP, AUPE, AUX, and AUXE series enclosures.

■ 4 colors available: Black, Gray, Navy, and Red. Retailed as a pack of 8pcs.

Product no.

Product no.				Weight (g)	Pack of
● Black	● Gray	● Navy	● Red		
AUCG-1B	AUCG-1G	AUCG-1N	AUCG-1R	9.5	8

AEG series EMC SHIELDING GASKET for AU□ series

NEW

EMC Shielding Effects

■ Spare EMC shielding gasket for AUPE, AUXE, and AUGE series enclosures. Installation on AUP series is possible to allow it to be EMC shielded.

Cross section view

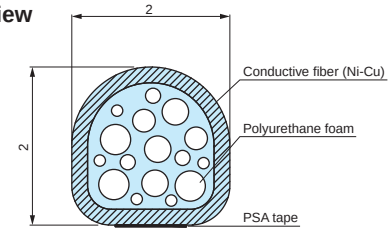

Product no.

Product no.	Material	Color	Sales unit
AEG-1000	Conductive fiber UL94V-0	Metallic gray	1000mm x 1 pc

MAR series WALL MOUNT SUPPORT ARM

NEW

- Wall mount support arm move easily to the preferred positions.
- Suitable for command panel on machinery and touch panel controller. Easy installation onto the wall as well.
- Hole pitch on the monitor bracket is compatible with VESA mount standards. Possible to mount PC display without modification.

MAR specifications

MAR-312W

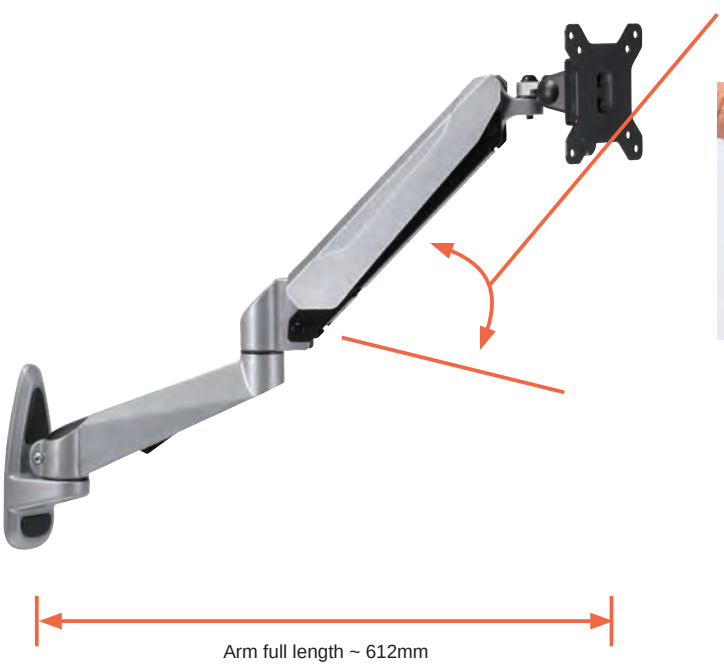

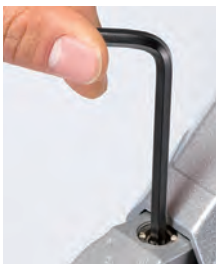

Adjustable bolt for up/down direction on arm is firmly set initially.
Adjust the movement according to the installed device.

Pan-Tilt bracket dimensions

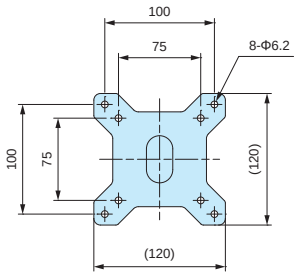

Wall mounting bracket dimensions

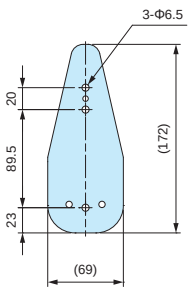

Max load : 6.5kg (including product weight, adjustable bolt firmly locked)
Material : Steel • Plastic • Aluminium diecast
*Wall mounting screws included.

MAR-111W

Pan-Tilt bracket angle can be adjusted by loosening the bolt after replacing the cover.

Pan-Tilt bracket dimensions

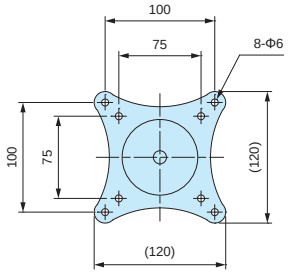

Wall mounting bracket dimensions

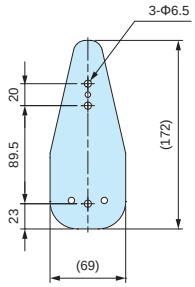

Max load : 8kg (including product weight)
Material : Steel • Plastic • Aluminium diecast
*Wall mounting screws included.

MAR-110W

*Pan-Tilt bracket do not move up/down direction.

Pan-Tilt bracket dimensions

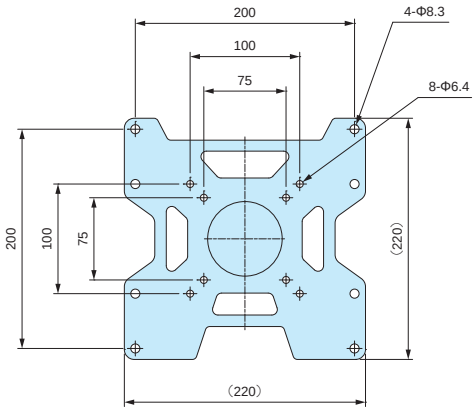

Wall mounting bracket dimensions

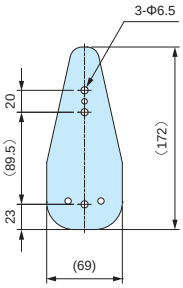

Max load : 8kg (including product weight)
Material : Steel • Plastic • Aluminium diecast
*Wall mounting screws included.

Product no. / Dimensions

Product no.	Arm full length	Arm color	Weight (kg)
MAR-312W	~ 612mm	Metallic gray	2.2
MAR-111W	~ 340mm	White / Black	1.0
MAR-110W	~ 130mm	White / Black	1.0

MXF • MXB • MXA • MX series

ALUMINIUM MOBILE ENCLOSURE

MXF • MXB • MXA • MX mobile enclosures are designed with a beautiful and elegant finish in mind. Having a rounded design, it fits comfortably in your hand, while giving off a simple yet stylish look. Suitable for use in a wide variety of industries, such as a small audio device, or as an amplifier unit, among others.
Selectable from 4 different types: an economical plastic end panel MX series, a luxurious aluminium end panel MXA series, a flanged end panel MXF series, and a protective silicone band MXB series.

APPLICATION EXAMPLE

Fiber Optic LAN Converter

Product by ENZO j-Fi (Japan)

Desktop Audio Preamplifier with USB

Product by conisis lab (Japan)

Wireless Microphone System

Product by Catchbox (Finland)

reddot award
product design

Ethernet Cellular Router

Product by NimbeLink (USA)

WiFi Access Point

AIS (Automatic Identification System) Signal Receiver

Product by SRT Marine System Solutions (UK)

Data Transmitter for Automatic Number Plate Recognition (ANPR) System

Product by Sensor Dynamics (Australia)

IO-Link DEVICE

Product by Lemonage Software (Germany)

CAN & LIN Vehicle Communication Simulator / Monitor

Product by P&A Technologies (Japan)

Signal Checker / Tester

Product by KUWATEC (Japan)

Audio Power Supply

Product by ACOUSTIC REVIVE (Japan)

Model Railroad Controller

Product by Calura (Japan)

Portable Frequency Standard Device

Product by FREQTIME (Japan)

Spectral Luminometer

Product by Spectra Co-op (Japan)

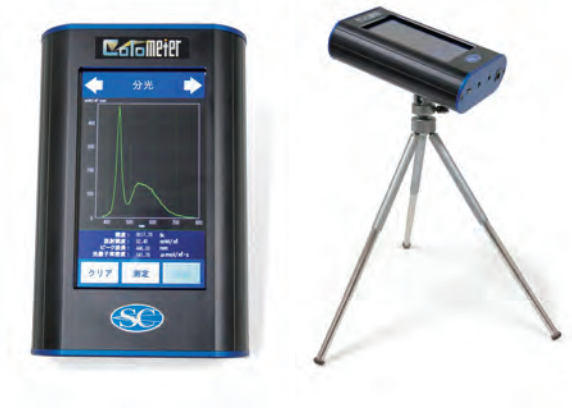

RTD Sensor Tester

Product by Turbomation (USA)

Mobile Moisture Meter

Product by ARP (Japan)

Full Color LED Tabletop Lighting Device

Product by DAISHO DENKI (Japan)

Active EMF Protection Device

Product by Blueshield (New Zealand)

Illumination Inverter

Product by Future Illuminations (USA)

MXF series FLANGED NETWORK ALUMINIUM ENCLOSURE

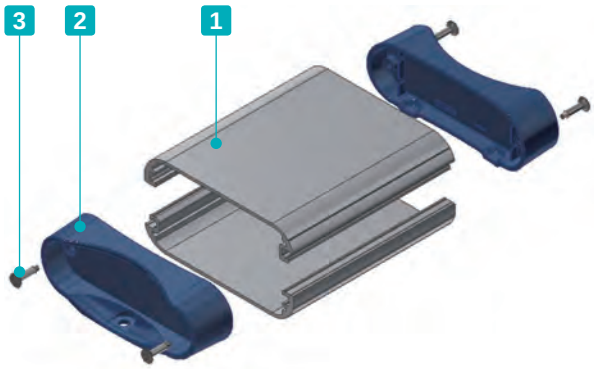

- Flanged network enclosure with easy to hold rounded design.
- 8 different color combinations and 12 different sizes available to choose from.
- Suitable to be used as transmitters, measurement tools, controllers, etc.
- Grooves are built into the internal enclosure, allowing for easy sliding/insertion of PCB boards.

Included screws
MXF2-6 models : M2.6-14 x 4 pcs
MXF2-8, 3-11 models : M3-12 x 4 pcs
MXF4-13 models : M3-14 x 4 pcs

Components

No.	Part name	Pcs	Material	Color / Finish
1	Frame	2	Extruded aluminium A6063S-T5	Silver • Black / Anodized with clear coating
2	Flanged panel	2	ABS UL94HB	Black • Gray / Unpainted Navy • Lime / Painted
3	Self-tapping screw	4	Steel	Nickel plated • Black trivalent chromate

Custom length available in 1mm intervals.

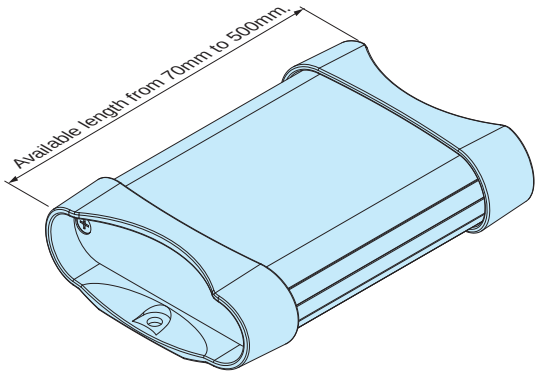

Color Type Please choose from the color combinations listed below

※Black and Gray panels are ABS color. Navy and Lime panels are Painted.

BB Black / Black	BG Black / Gray	BN Black / Navy	BL Black / Lime
SB Silver / Black	**SG Silver / Gray**	**SN Silver / Navy**	**SL Silver / Lime**

MXF dimensions

■ DXF/DWG/PDF/STP drawings available on our website.

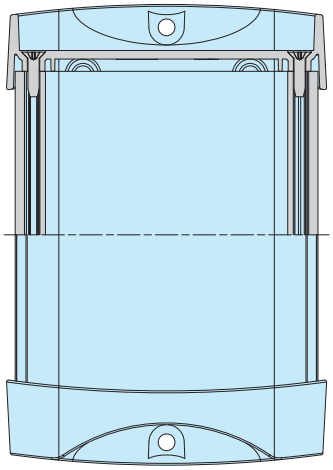

Screw Type

P	H
Plus head	Hexalobular head

Please request / order by indicating the combination part number as below.

MXF 2 – 6 – 7 □ □ □

Color code

Screw P or H

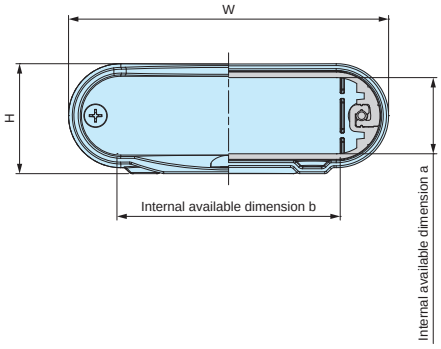

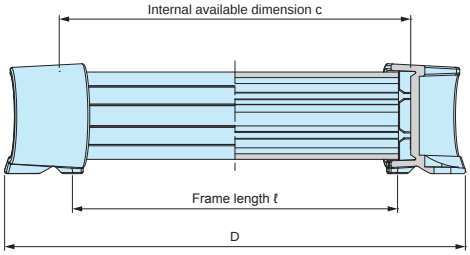

Product no. / Dimensions

■ Please suffix color and screw code at the end of the product number.

Product no.	H	W	D	a	b	c	ℓ	Weight (g)
MXF2- 6- 7□□□	23.4	60.9	65	15.1	41.1	45	40	44
MXF2- 6- 9□□□	23.4	60.9	90	15.1	41.1	70	65	59
MXF2- 6-12□□□	23.4	60.9	115	15.1	41.1	95	90	75
MXF2- 8- 9□□□	29.6	86.1	94	20.5	60.1	64.6	58	90
MXF2- 8-12□□□	29.6	86.1	124	20.5	60.1	94.6	88	121
MXF2- 8-15□□□	29.6	86.1	154	20.5	60.1	124.6	118	153
MXF3-11-10□□□	35.6	114.2	104	26.5	87.3	74.6	66	130
MXF3-11-14□□□	35.6	114.2	144	26.5	87.3	114.6	106	184
MXF3-11-19□□□	35.6	114.2	194	26.5	87.3	164.6	156	251
MXF4-13-12□□□	40.6	134.2	124	31	104.1	94.4	84	197
MXF4-13-17□□□	40.6	134.2	174	31	104.1	144.4	134	284
MXF4-13-23□□□	40.6	134.2	234	31	104.1	204.4	194	388

MXB series ALUMINIUM MOBILE ENCLOSURE with SILICONE BAND

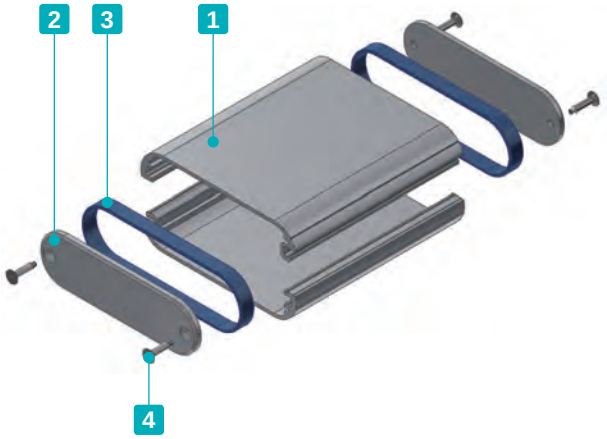

- All aluminium mobile enclosure with anti-slip, impact resistant silicone band.
- 16 different color combinations and 24 different sizes available to choose from.
- Suitable to be used as digital audio amplifiers, communication devices, measurement tools, etc.

Included screws
MXB2-4, 2-6 models : M2.6-14 x 4 pcs
MXB2-7, 2-8, 3-11, 4-7, 4-10, 4-13 models : M3-10 x 4 pcs

Components

No.	Part name	Pcs	Material	Color / Finish
1	Frame	2	Extruded aluminium A6063S-T5	Silver • Black / Anodized with clear coating
2	Panel	2	Aluminium A1050P	Silver • Black / Anodized
3	Silicone band	2	Silicone	Black • Light gray • Navy • Cyan • Green • Yellow • Orange • Red
4	Self-tapping screw	4	Steel	Nickel plated • Black trivalent chromate

Color Type

BB Black / Black	BL Black / Light gray	BN Black / Navy	BC Black / Cyan	BG Black / Green	BY Black / Yellow	BO Black / Orange	BR Black / Red

SB Silver / Black	SL Silver / Light gray	SN Silver / Navy	SC Silver / Cyan	SG Silver / Green	SY Silver / Yellow	SO Silver / Orange	SR Silver / Red

- Mix and match the MXA series with the SIB series silicone band for a wider variety of color combinations.

MXB dimensions

■ DXF/DWG/PDF/STP drawings available on our website.

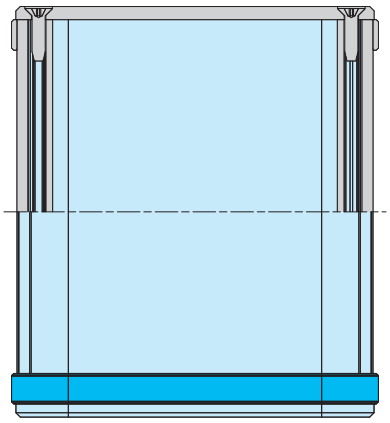

Screw Type

P	H
Plus head	Hexalobular head

Please request / order by indicating the combination part number as below.

MXB 2 – 4 – 4 □ □ □

Color code

Screw P or H

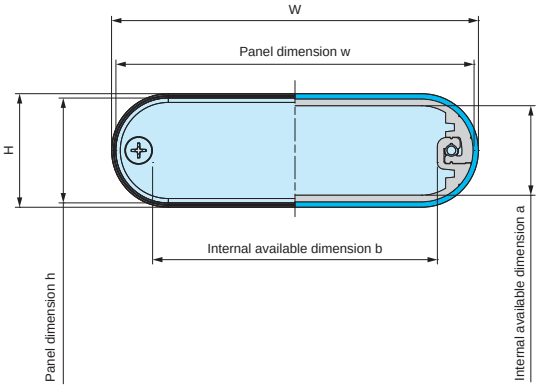

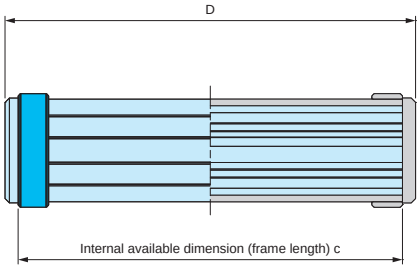

Product no. / Dimensions

■ Please suffix color and screw code at the end of the product number.

Product no.	H	W	D	h	w	a	b	c	Weight (g)
MXB2- 4- 4□□□	18	43.6	44	15	41	12.2	26.6	38	26
MXB2- 4- 7□□□	18	43.6	74	15	41	12.2	26.6	68	41
MXB2- 4-10□□□	18	43.6	104	15	41	12.2	26.6	98	51
MXB2- 6- 5□□□	20.3	59.6	46	18	57	15.1	42.5	40	36
MXB2- 6- 7□□□	20.3	59.6	71	18	57	15.1	42.5	65	51
MXB2- 6-10□□□	20.3	59.6	96	18	57	15.1	42.5	90	66
MXB2- 7- 5□□□	23.5	72.5	54	20	70	16.5	53.2	48	57
MXB2- 7- 8□□□	23.5	72.5	84	20	70	16.5	53.2	78	82
MXB2- 7-11□□□	23.5	72.5	114	20	70	16.5	53.2	108	112
MXB2- 8- 6□□□	26.5	84.8	64	24	82	20.5	65.2	58	77
MXB2- 8- 9□□□	26.5	84.8	94	24	82	20.5	65.2	88	107
MXB2- 8-12□□□	26.5	84.8	124	24	82	20.5	65.2	118	137
MXB3-11- 7□□□	33.5	113.9	72	30	110	26.5	93.2	66	120
MXB3-11-11□□□	33.5	113.9	112	30	110	26.5	93.2	106	170
MXB3-11-16□□□	33.5	113.9	162	30	110	26.5	93.2	156	240
MXB4- 7- 5□□□	38.2	72	52	35	70	31.4	53.2	46	72
MXB4- 7- 8□□□	38.2	72	82	35	70	31.4	53.2	76	102
MXB4- 7-11□□□	38.2	72	112	35	70	31.4	53.2	106	137
MXB4-10- 7□□□	44.7	97.9	70	40	95	36.4	78.2	64	125
MXB4-10-11□□□	44.7	97.9	110	40	95	36.4	78.2	104	180
MXB4-10-14□□□	44.7	97.9	140	40	95	36.4	78.2	134	225
MXB4-13- 9□□□	38.5	134	90	35	130	31	113.2	84	187
MXB4-13-14□□□	38.5	134	140	35	130	31	113.2	134	272
MXB4-13-20□□□	38.5	134	200	35	130	31	113.2	194	377

■ H and W may experience slight variance from listed dimensions due to silicone band construct.

MXA series ALUMINIUM MOBILE ENCLOSURE

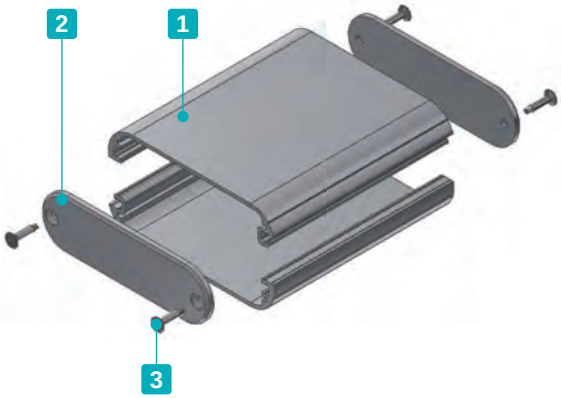

- All aluminium mobile enclosure with easy to hold rounded design.
- 14 different color combinations and 24 different sizes available to choose from.
- Suitable to be used as digital audio amplifiers, communication devices, measurement tools, etc.
- Grooves are built into the internal enclosure, allowing for easy sliding/insertion of PCB boards.

Included screws
MXA2-4, 2-6 models : M2.6-14 x 4pcs
MXA2-7, 2-8, 3-11, 4-7, 4-10, 4-13 models : M3-10 x 4 pcs

Components

No.	Part name	Pcs	Material	Color / Finish
1	Frame	2	Extruded aluminium A6063S-T5	Silver • Black / Anodized with clear coating
2	Panel	2	Aluminium A1050P	Black • Silver • Cobalt • Green • Purple • Orange • Red / Anodized
3	Self-tapping screw	4	Steel	Nickel plated • Black trivalent chromate

Custom length available in 1mm intervals.

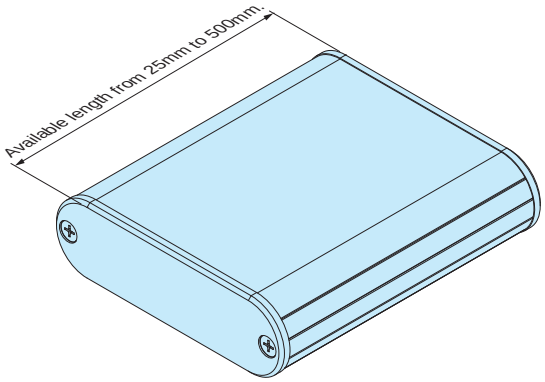

Color Type Please choose from the color combinations listed below

BB Black / Black	BS Black / Silver	BC Black / Cobalt	BG Black / Green	BP Black / Purple	BO Black / Orange	BR Black / Red

SB Silver / Black	SS Silver / Silver	SC Silver / Cobalt	SG Silver / Green	SP Silver / Purple	SO Silver / Orange	SR Silver / Red

MXA dimensions

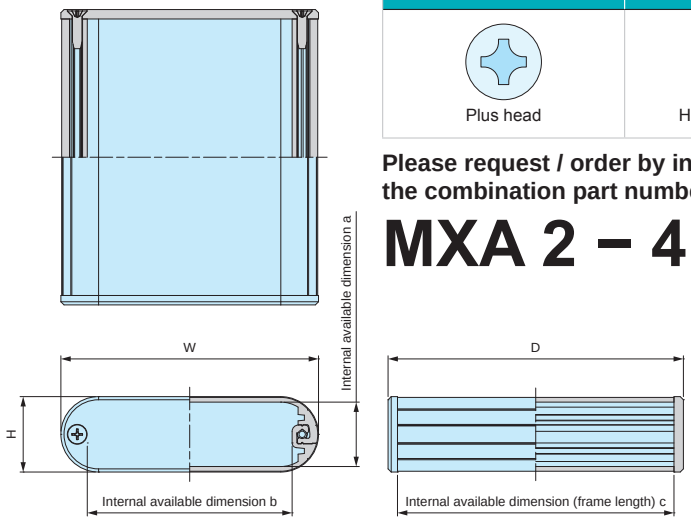

■ DXF/DWG/PDF/STP drawings available on our website.

Screw Type

P	H
Plus head	Hexalobular head

Please request / order by indicating the combination part number as below.

MXA 2 – 4 – 4 □ □ □

Color code

Screw P or H

Accessories (Optional parts)

Silicone band SIB series
See page 196

Embedded battery box BC series
See page 125 ~ 128

Product no. / Dimensions

■ Please suffix color and screw code at the end of the product number.

Product no.	H	W	D	a	b	c	Weight (g)
MXA2- 4- 4□□□	15	41	44	12.2	26.6	38	25
MXA2- 4- 7□□□	15	41	74	12.2	26.6	68	40
MXA2- 4-10□□□	15	41	104	12.2	26.6	98	50
MXA2- 6- 5□□□	18	57	46	15.1	42.5	40	35
MXA2- 6- 7□□□	18	57	71	15.1	42.5	65	50
MXA2- 6-10□□□	18	57	96	15.1	42.5	90	65
MXA2- 7- 5□□□	20	70	54	16.5	53.2	48	55
MXA2- 7- 8□□□	20	70	84	16.5	53.2	78	80
MXA2- 7-11□□□	20	70	114	16.5	53.2	108	110
MXA2- 8- 6□□□	24	82	64	20.5	65.2	58	75
MXA2- 8- 9□□□	24	82	94	20.5	65.2	88	105
MXA2- 8-12□□□	24	82	124	20.5	65.2	118	135
MXA3-11- 7□□□	30	110	72	26.5	93.2	66	115
MXA3-11-11□□□	30	110	112	26.5	93.2	106	165
MXA3-11-16□□□	30	110	162	26.5	93.2	156	235
MXA4- 7- 5□□□	35	70	52	31.4	53.2	46	70
MXA4- 7- 8□□□	35	70	82	31.4	53.2	76	100
MXA4- 7-11□□□	35	70	112	31.4	53.2	106	135
MXA4-10- 7□□□	40	95	70	36.4	78.2	64	120
MXA4-10-11□□□	40	95	110	36.4	78.2	104	175
MXA4-10-14□□□	40	95	140	36.4	78.2	134	220
MXA4-13- 9□□□	35	130	90	31	113.2	84	180
MXA4-13-14□□□	35	130	140	31	113.2	134	265
MXA4-13-20□□□	35	130	200	31	113.2	194	370

MX series MOBILE ENCLOSURE

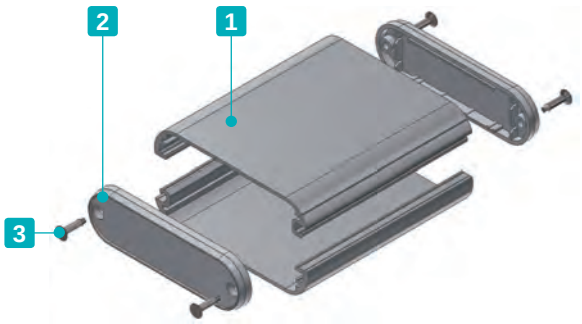

- Mobile enclosure with easy to hold rounded design.
- 12 different color combinations and 24 different sizes available to choose from.
- Frame is made from extruded aluminium material, while the panel is ABS plastic.
- Grooves are built into the internal enclosure, allowing for easy sliding/insertion of PCB boards.

Included screws
MX2-4, 2-6 models : M2.6-14 x 4 pcs
MX2-7, 2-8, 3-11 models : M3-12 x 4 pcs
MX4-7, 4-10, 4-13 models : M3-14 x 4 pcs

Components

No.	Part name	Pcs	Material	Color / Finish
1	Frame	2	Extruded aluminium A6063S-T5	Silver • Black / Anodized with clear coating
2	Panel	2	ABS UL94HB	Gray • Black / Unpainted Navy • Lime • Orange • Red / Painted
3	Self-tapping screw	4	Steel	Nickel plated • Black trivalent chromate

Custom length available in 1mm intervals.

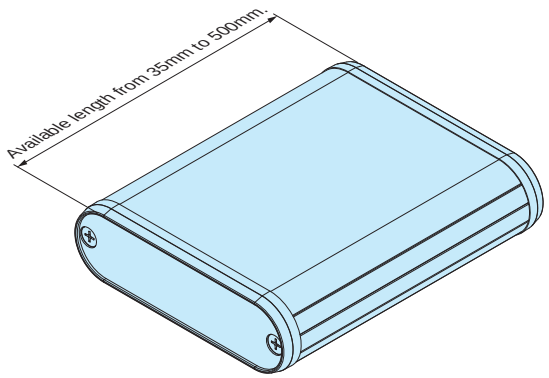

Color Type Please choose from the color combinations listed below

※Black • Gray panels / Unpainted Other panels / Painted

BB Black / Black	BG Black / Gray	BN Black / Navy	BL Black / Lime	BO Black / Orange	BR Black / Red
SB Silver / Black	**SG Silver / Gray**	**SN Silver / Navy**	**SL Silver / Lime**	**SO Silver / Orange**	**SR Silver / Red**

MX dimensions

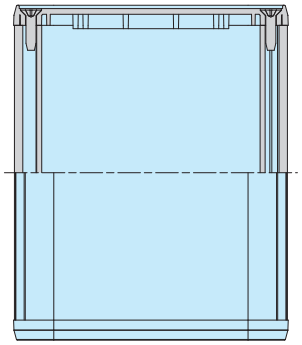

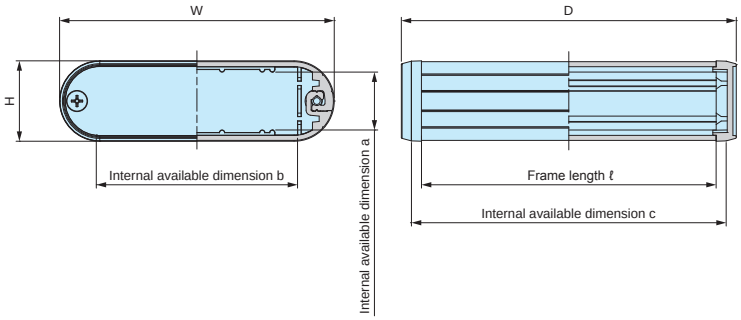

■ DXF/DWG/PDF/STP drawings available on our website.

Screw Type

P	H
Plus head	Hexalobular head

Please request / order by indicating the combination part number as below.

MX 2 – 4 – 5 □ □ □

Color code

Screw P or H

Accessories (Optional parts)

Silicone band SIB series
See page 196

Embedded battery box BC series
See page 125 ~ 128

Product no. / Dimensions

■ Please suffix color and screw code at the end of the product number.

Product no.	H	W	D	a	b	c	ℓ	Weight (g)
MX2- 4- 5□□□	15	41	50	8.9	26.6	44.6	38	20
MX2- 4- 8□□□	15	41	80	8.9	26.6	74.6	68	35
MX2- 4-11□□□	15	41	110	8.9	26.6	104.6	98	50
MX2- 6- 5□□□	18	57	50	12.3	42.5	45	40	35
MX2- 6- 8□□□	18	57	75	12.3	42.5	70	65	50
MX2- 6-10□□□	18	57	100	12.3	42.5	95	90	70
MX2- 7- 6□□□	20	70	60	13.2	53.2	54.6	48	50
MX2- 7- 9□□□	20	70	90	13.2	53.2	84.6	78	80
MX2- 7-12□□□	20	70	120	13.2	53.2	114.6	108	105
MX2- 8- 7□□□	24	82	70	17.2	65.2	64.6	58	75
MX2- 8-10□□□	24	82	100	17.2	65.2	94.6	88	105
MX2- 8-13□□□	24	82	130	17.2	65.2	124.6	118	140
MX3-11- 8□□□	30	110	80	23.3	93.2	74.6	66	110
MX3-11-12□□□	30	110	120	23.3	93.2	114.6	106	165
MX3-11-17□□□	30	110	170	23.3	93.2	164.6	156	235
MX4- 7- 6□□□	35	70	60	28.2	53.2	53	46	65
MX4- 7- 9□□□	35	70	90	28.2	53.2	83	76	100
MX4- 7-12□□□	35	70	120	28.2	53.2	113	106	130
MX4-10- 8□□□	40	95	80	33.1	78.2	73	64	115
MX4-10-12□□□	40	95	120	33.1	78.2	113	104	175
MX4-10-15□□□	40	95	150	33.1	78.2	143	134	215
MX4-13-10□□□	35	130	100	27.7	113.2	94.4	84	175
MX4-13-15□□□	35	130	150	27.7	113.2	144.4	134	265
MX4-13-21□□□	35	130	210	27.7	113.2	204.4	194	375

Cross section view of MXF • MXB • MXA • MX frames

■ DXF/DWG/PDF/STP drawings available on our website.

MXF • MXB • MXA • MX2-4-□

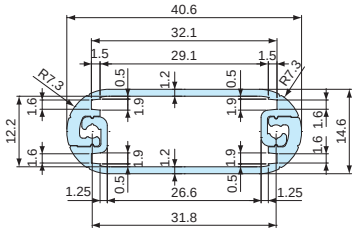

MXF • MXB • MXA • MX2-8-□

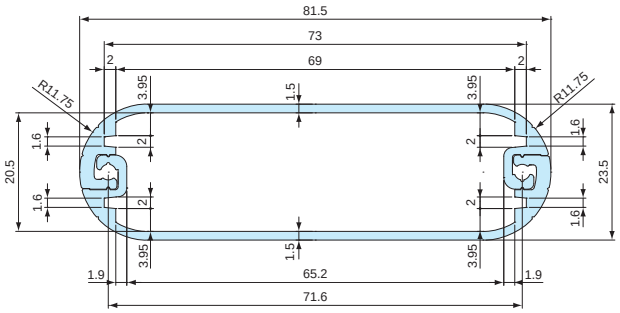

MXF • MXB • MXA • MX2-6-□

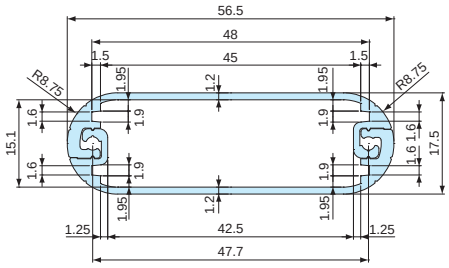

MXF • MXB • MXA • MX3-11-□

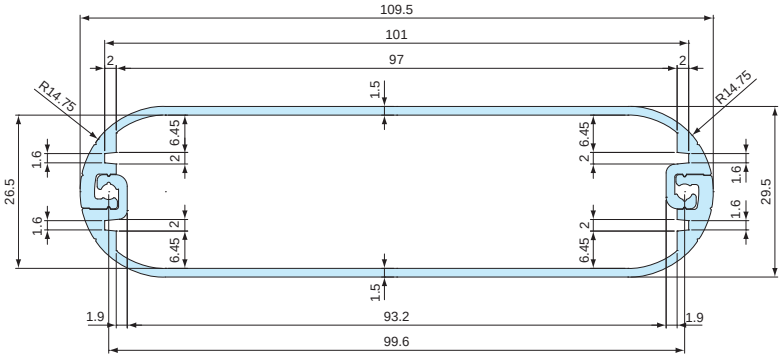

MXF • MXB • MXA • MX2-7-□

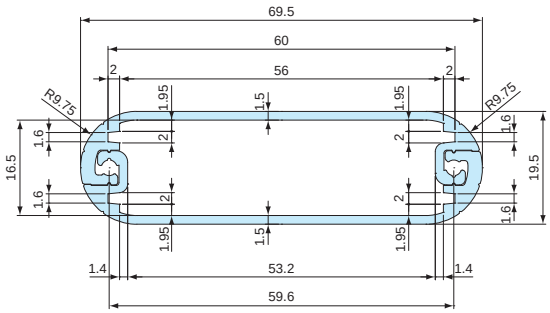

MXF • MXB • MXA • MX4-7-□

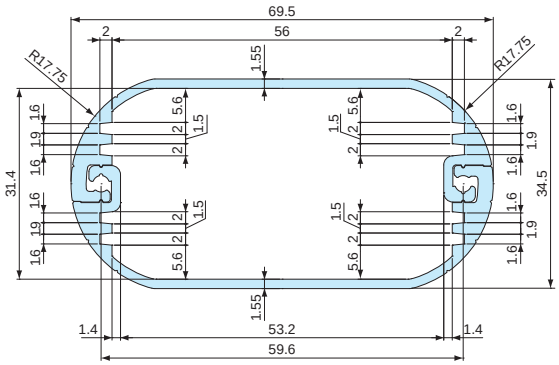

MXF • MXB • MXA • MX4-10-□

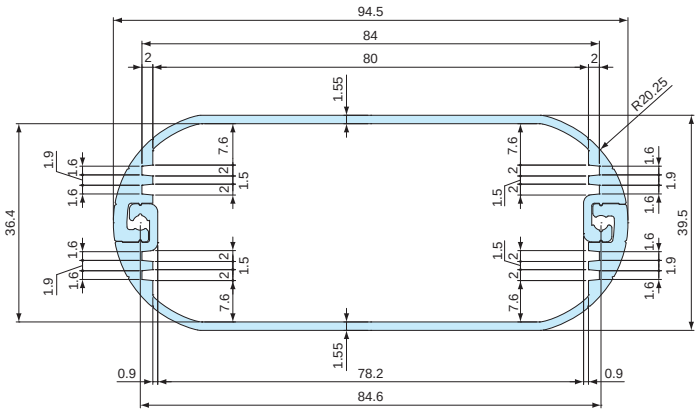

MXF • MXB • MXA • MX4-13-□

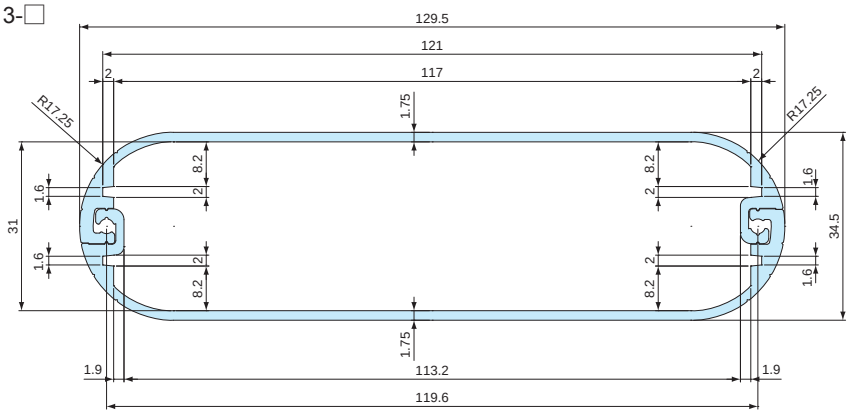

Accessories (Optional parts)

SIB series SILICONE BAND

Application example

- Silicone band designed to fit MXA and MX series.
- Silicone band provides both shock resistance and non-slip grips for the enclosure.
- Elastic silicone band may also fit other similarly sized enclosures.

SIB dimensions

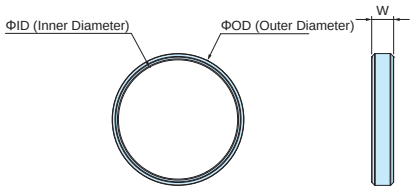

Color Type

Code	R Red	O Orange	Y Yellow	G Green	C Cyan	N Navy	L Light gray	B Black
Color								

Components

Part name	Pcs	Material	Color
Silicone band	Pair (2 pcs)	Silicone	Red • Orange • Yellow • Green • Cyan • Navy • Light gray • Black

Product no. / Dimensions

■ Please suffix color code at the end of the product number.

Product no.	W	ID	OD	Suitable models	Enclosure circumference (mm)	Weight (g)
SIB-21□	6	21	25	MXA • MX2-4-□ • 2-6-□	95~135	2
SIB-38□	7	38	42	MXA • MX2-7-□ • 2-8-□ • 4-7-□	160~190	4
SIB-58□	8	58	63	MXA • MX3-11-□ • 4-10-□	215~255	10
SIB-72□	10	72	77	MXA • MX4-13-□	280~320	14

MULTI-FUNCTION EXTRUDED ALUMINIUM CASE

EXPT • EXP • EXPE • EXW • EXPF • EXEF • EXWF series

The following series, by utilizing similar extrusion frames, are available in 7 different types, such as having IP65, or EMC shielded functions, among others.
73 different sizes are available for each version.

CORNER GUARD

EXP series Page 203 ~ 204

FLANGED

EXPF series Page 209 ~ 210

IP65 CORNER GUARD

EXW series Page 207 ~ 208

IP65 FLANGED

EXWF series Page 213 ~ 214

EMC CORNER GUARD

EXPE series Page 205 ~ 206

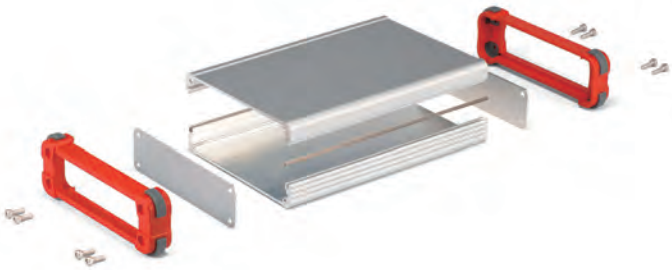

EMC FLANGED

EXEF series Page 211 ~ 212

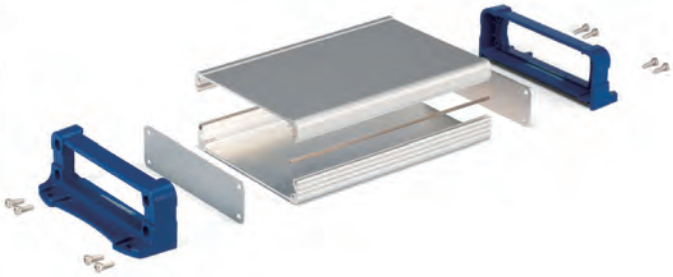

WITH TILT LEG

EXPT series Page 201 ~ 202

Custom length available in 1mm intervals

16 COLOR COMBINATIONS

EXP series is available in 2 different body frame and 8 different exterior frame colors for a total of 16 different color types.

APPLICATION EXAMPLE

Measuring Instrument

Accessories (Optional parts)
Tilt leg TLW series
See page 222

Network / Communication Box

Controller

Ultrasonic Thickness Gauge

Product by NOVOTEST (Ukraine)

Radio Communication Tester

Product by RFNetworks (Japan)

Tank Gauging System Interface Unit

Product by Tokyo Keiso (Japan)

Fiber Laser Projector

Product by NEOARK (Japan)

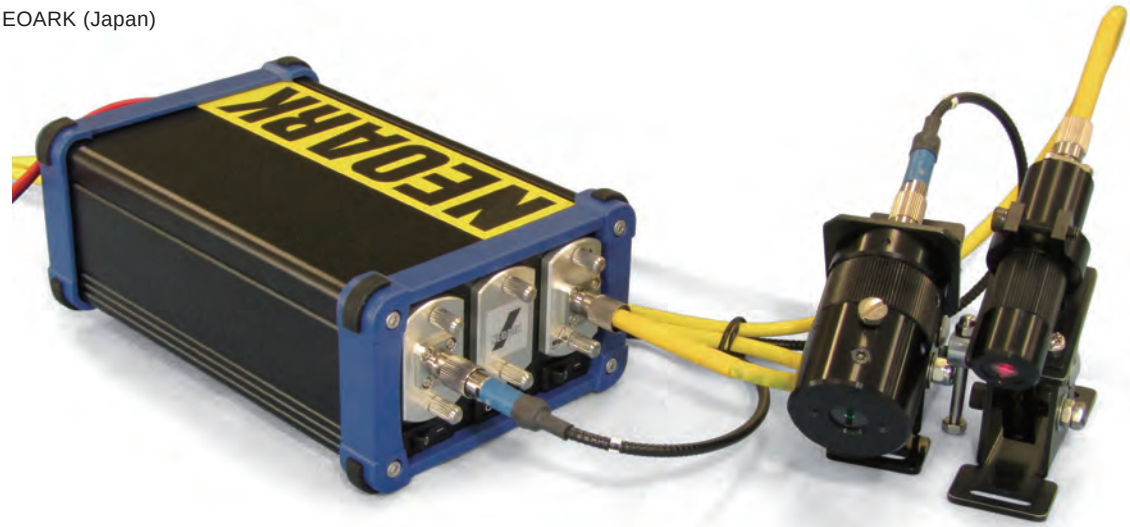

Desktop Load Cell Amplifier

Product by IMADA (Japan)

Magnet Elongation Measurement System

Product by Taikou Testing Equipment Industry (Japan)

Peristaltic DC Pump

Product by Technic (USA)

Multi-Show Controller

Product by Kuwatec (Japan)

EXPT series ALUMINIUM PANEL CASE with TILT LEG

NEW

■ Aluminium enclosure with tilt leg for measurement instrument use. Available in 30 different sizes and 16 different color combinations.

Components

No.	Part name	Pcs	Material	Color / Finish
1	Panel	2	Aluminium A1100P	Silver / Anodized • Black / Painted
2	Top cover	1	Extruded aluminium A6063S-T5	Silver • Black / Anodized with clear coating
3	Bottom cover	1	Extruded aluminium A6063S-T5	Silver • Black / Anodized with clear coating
4	Exterior frame	2	PC+ABS Flame-resistant	Black • Gray / Unpainted Indigo • Navy • Lime • Yellow • Orange • Red / Painted
5	Corner guard	8	Silicone	Dark gray • Black
6	Screw (Hexagonal)	8	Stainless steel	Unfinished
7	Tilt leg	1 set	PC+ABS UL94V-0, TPE	Black & Black • Navy & Gray • Light gray & Gray

■ See page 217 ~ 220 for Top / Bottom cover dimensions

Color Type

Code	SB Silver / Black	SG Silver / Gray	SI Silver / Indigo	SN Silver / Navy
Color				
Code	SL Silver / Lime	SY Silver / Yellow	SO Silver / Orange	SR Silver / Red
Color				
Code	BB Black / Black	BG Black / Gray	BI Black / Indigo	BN Black / Navy
Color				
Code	BL Black / Lime	BY Black / Yellow	BO Black / Orange	BR Black / Red
Color				

EXPT dimensions

■ DXF/DWG/PDF/STP drawings available on our website.

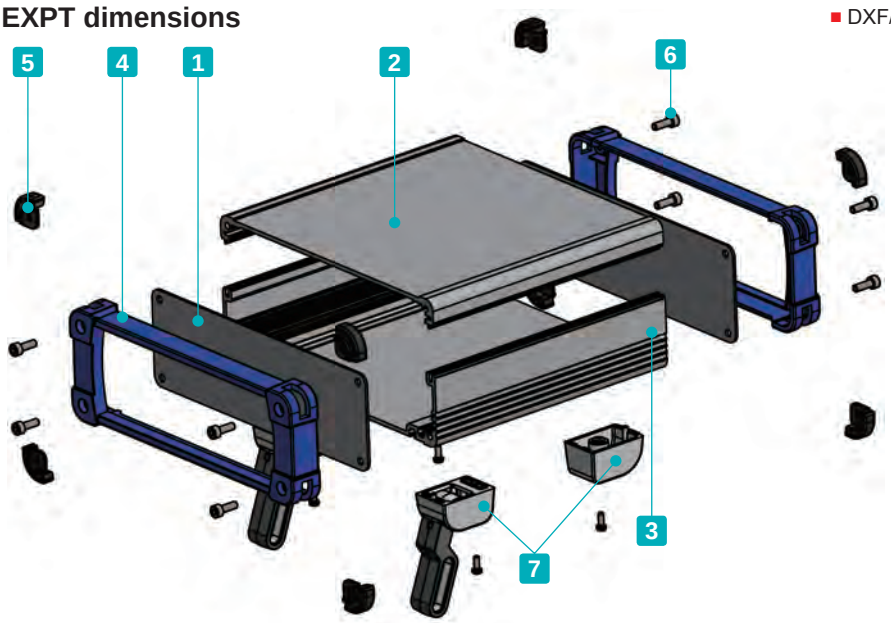

Included screws
EXPT20-□ models : M4-12 x 8 pcs
EXPT24-□, 30-□ models : M5-12 x 8 pcs
※Hexagonal wrench included.

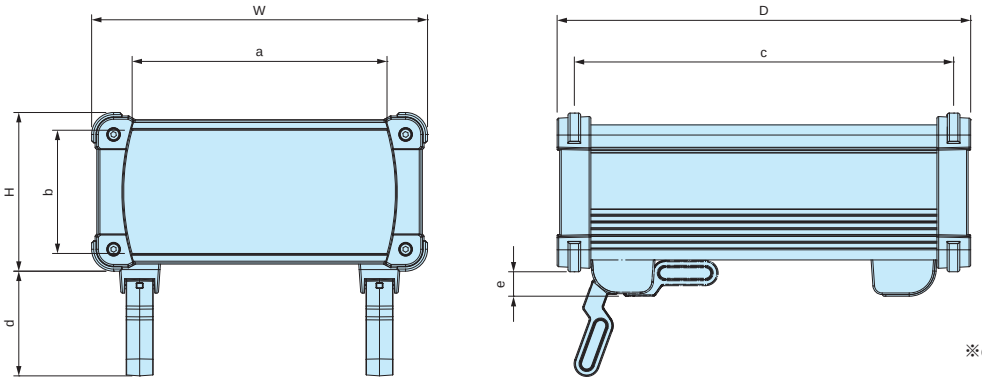

※c = Top / Bottom cover length.

Product no. / Dimensions

■ Please suffix color code at the end of the product number.

Product no.	External dimensions			Internal dimensions				
	W	H	D	a	b	c	d	e
EXPT20- 6-19□□	199	56	192	131	35	172	14.5	62
EXPT20- 6-25□□	199	56	245	131	35	225	14.5	62
EXPT20- 6-30□□	199	56	300	131	35	280	14.5	62
EXPT20- 7-19□□	199	74	192	131	53	172	14.5	62
EXPT20- 7-25□□	199	74	245	131	53	225	14.5	62
EXPT20- 7-30□□	199	74	300	131	53	280	14.5	62
EXPT20- 9-19□□	199	94	192	131	73	172	14.5	62
EXPT20- 9-25□□	199	94	245	131	73	225	14.5	62
EXPT20- 9-30□□	199	94	300	131	73	280	14.5	62
EXPT20-12-19□□	199	119	192	131	98	172	14.5	62
EXPT20-12-25□□	199	119	245	131	98	225	14.5	62
EXPT20-12-30□□	199	119	300	131	98	280	14.5	62
EXPT24- 6-17□□	244	64	170	176	43	147	14.5	62
EXPT24- 6-23□□	244	64	230	176	43	207	14.5	62
EXPT24- 6-29□□	244	64	290	176	43	267	14.5	62
EXPT24- 6-35□□	244	64	350	176	43	327	14.5	62
EXPT24- 9-17□□	244	89	170	176	68	147	14.5	62
EXPT24- 9-23□□	244	89	230	176	68	207	14.5	62
EXPT24- 9-29□□	244	89	290	176	68	267	14.5	62
EXPT24- 9-35□□	244	89	350	176	68	327	14.5	62
EXPT24-11-17□□	244	114	170	176	93	147	14.5	62
EXPT24-11-23□□	244	114	230	176	93	207	14.5	62
EXPT24-11-29□□	244	114	290	176	93	267	14.5	62
EXPT24-11-35□□	244	114	350	176	93	327	14.5	62
EXPT30- 9-25□□	300	90	250	230	68	228	14	61.5
EXPT30- 9-32□□	300	90	320	230	68	298	14	61.5
EXPT30- 9-40□□	300	90	400	230	68	378	14	61.5
EXPT30-14-25□□	300	140	250	230	118	228	14	61.5
EXPT30-14-32□□	300	140	320	230	118	298	14	61.5
EXPT30-14-40□□	300	140	400	230	118	378	14	61.5

■ Custom length is available

EXP series ALUMINIUM PANEL CASE with CORNER GUARD

NEW SIZE

- Corner guards are designed to be both aesthetically pleasing, and impact resistant.
- Available in 73 different sizes and 16 different color combinations.
- Custom length is available.

Included screws
EXP7-□, 9-□ models : M2.5-8 x 8 pcs
EXP12-□, 15-□ models : M3-10 x 8 pcs
EXP20-□ models : M4-12 x 8 pcs
EXP24-□, 30-□ models : M5-12 x 8 pcs
※Hexagonal wrench included.

Components

No.	Part name	Pcs	Material	Color / Finish
1	Panel	2	Aluminium A1100P	Silver / Anodized • Black / Painted
2	Top cover	1	Extruded aluminium A6063S-T5	Silver • Black / Anodized with clear coating
3	Bottom cover	1	Extruded aluminium A6063S-T5	Silver • Black / Anodized with clear coating
4	Exterior frame	2	PC+ABS Flame-resistant	Black • Gray / Unpainted Indigo • Navy • Lime • Yellow • Orange • Red / Painted
5	Corner guard	8	Silicone	Dark gray • Black
6	Screw (Hexagonal)	8	Stainless steel	Unfinished

■ See page 217 ~ 220 for Top / Bottom cover dimensions

Color Type

Code	SB Silver / Black	SG Silver / Gray	SI Silver / Indigo	SN Silver / Navy
Color				
Code	SL Silver / Lime	SY Silver / Yellow	SO Silver / Orange	SR Silver / Red
Color				
Code	BB Black / Black	BG Black / Gray	BI Black / Indigo	BN Black / Navy
Color				
Code	BL Black / Lime	BY Black / Yellow	BO Black / Orange	BR Black / Red
Color				

EXP dimensions

■ DXF/DWG/PDF/STP drawings available on our website.

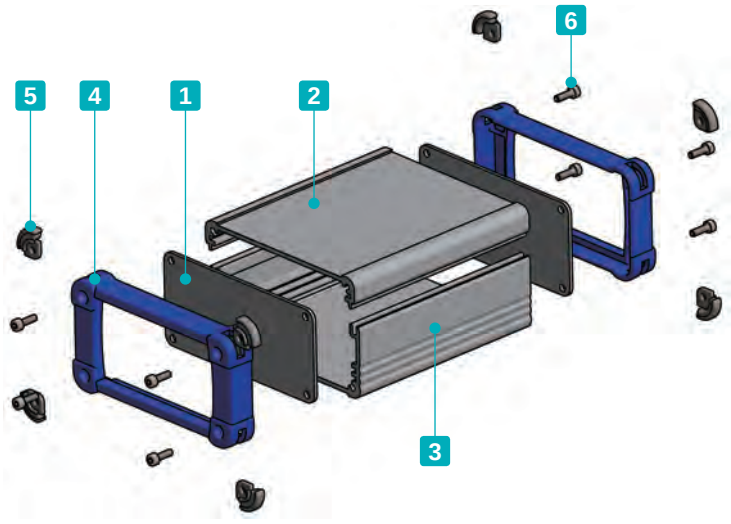

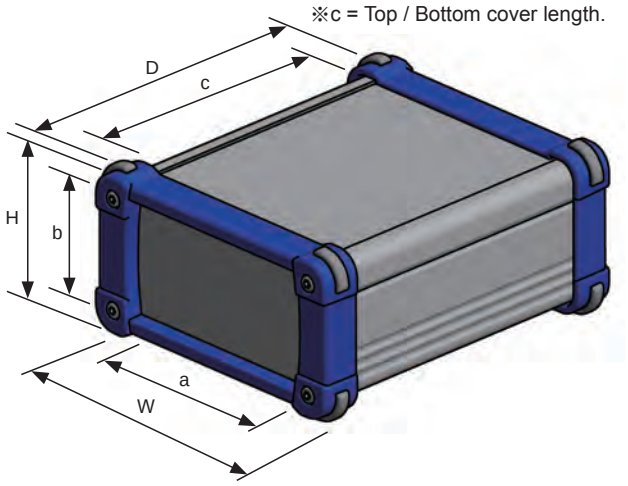

Product no. / Dimensions

■ Please suffix color code at the end of the product number.

Product no.	External dimensions			Internal dimensions		
	W	H	D	a	b	c
EXP 7- 3- 6□□	69	34	60	46	19.6	46
EXP 7- 3- 9□□	69	34	87	46	19.6	73
EXP 7- 3-11□□	69	34	110	46	19.6	96
EXP 7- 4- 6□□	69	44	60	46	29,6	46
EXP 7- 4- 9□□	69	44	87	46	29,6	73
EXP 7- 4-11□□	69	44	110	46	29,6	96
EXP 7- 6- 6□□	69	59	60	46	44.6	46
EXP 7- 6- 9□□	69	59	87	46	44.6	73
EXP 7- 6-11□□	69	59	110	46	44.6	96
EXP 9- 4- 7□□	89	39	70	66	24.6	56
EXP 9- 4-10□□	89	39	100	66	24.6	86
EXP 9- 4-13□□	89	39	130	66	24.6	116
EXP 9- 5- 7□□	89	49	70	66	34.6	56
EXP 9- 5-10□□	89	49	100	66	34.6	86
EXP 9- 5-13□□	89	49	130	66	34.6	116
EXP 9- 6- 7□□	89	64	70	66	49.6	56
EXP 9- 6-10□□	89	64	100	66	49.6	86
EXP 9- 6-13□□	89	64	130	66	49.6	116
EXP12- 4- 9□□	116	41	90	88	24	74
EXP12- 4-13□□	116	41	130	88	24	114
EXP12- 4-18□□	116	41	176	88	24	160
EXP12- 6- 9□□	116	56	90	88	39	74
EXP12- 6-13□□	116	56	130	88	39	114
EXP12- 6-18□□	116	56	176	88	39	160
EXP12- 7- 9□□	116	71	90	88	54	74
EXP12- 7-13□□	116	71	130	88	54	114
EXP12- 7-18□□	116	71	176	88	54	160
EXP15- 5-11□□	151	46	110	106.8	29	93
EXP15- 5-15□□	151	46	150	106.8	29	133
EXP15- 5-20□□	151	46	200	106.8	29	183
EXP15- 6-11□□	151	61	110	106.8	44	93
EXP15- 6-15□□	151	61	150	106.8	44	133
EXP15- 6-20□□	151	61	200	106.8	44	183
EXP15- 8-11□□	151	81	110	106.8	64	93
EXP15- 8-15□□	151	81	150	106.8	64	133
EXP15- 8-20□□	151	81	200	106.8	64	183
EXP15-10-11□□	151	101	110	106.8	84	93
EXP15-10-15□□	151	101	150	106.8	84	133
EXP15-10-20□□	151	101	200	106.8	84	183

Product no.	External dimensions			Internal dimensions		
	W	H	D	a	b	c
EXP20- 6-14□□	199	56	140	131	35	120
EXP20- 6-19□□	199	56	192	131	35	172
EXP20- 6-25□□	199	56	245	131	35	225
EXP20- 6-30□□	199	56	300	131	35	280
EXP20- 7-14□□	199	74	140	131	53	120
EXP20- 7-19□□	199	74	192	131	53	172
EXP20- 7-25□□	199	74	245	131	53	225
EXP20- 7-30□□	199	74	300	131	53	280
EXP20- 9-14□□	199	94	140	131	73	120
EXP20- 9-19□□	199	94	192	131	73	172
EXP20- 9-25□□	199	94	245	131	73	225
EXP20- 9-30□□	199	94	300	131	73	280
EXP20-12-14□□	199	119	140	131	98	120
EXP20-12-19□□	199	119	192	131	98	172
EXP20-12-25□□	199	119	245	131	98	225
EXP20-12-30□□	199	119	300	131	98	280
EXP24- 6-17□□	244	64	170	176	43	147
EXP24- 6-23□□	244	64	230	176	43	207
EXP24- 6-29□□	244	64	290	176	43	267
EXP24- 6-35□□	244	64	350	176	43	327
EXP24- 9-17□□	244	89	170	176	68	147
EXP24- 9-23□□	244	89	230	176	68	207
EXP24- 9-29□□	244	89	290	176	68	267
EXP24- 9-35□□	244	89	350	176	68	327
EXP24-11-17□□	244	114	170	176	93	147
EXP24-11-23□□	244	114	230	176	93	207
EXP24-11-29□□	244	114	290	176	93	267
EXP24-11-35□□	244	114	350	176	93	327
NEW EXP30- 9-25□□	300	90	250	230	68	228
NEW EXP30- 9-32□□	300	90	320	230	68	298
NEW EXP30- 9-40□□	300	90	400	230	68	378
NEW EXP30-14-25□□	300	140	250	230	118	228
NEW EXP30-14-32□□	300	140	320	230	118	298
NEW EXP30-14-40□□	300	140	400	230	118	378

■ Custom length is available

EXPE series ALUMINIUM EMC SHIELDED CASE with CORNER GUARD

NEW SIZE

EMC Shielding Effects

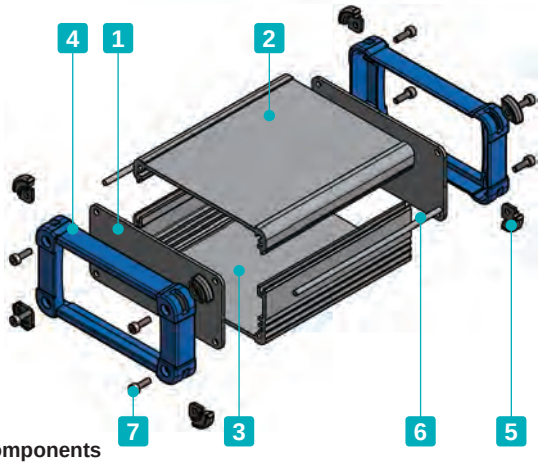

- Corner guards are designed to be both aesthetically pleasing, and impact resistant.
- Available in 73 different sizes and 8 different color combinations.
- EMC shielding is achieved by having the unfinished inner sides of the top/bottom covers and panels, as well as the fabric-over-foam gasket in contact with one another.

Included screws
EXPE7-□, 9-□ models : M2.5-8 x 8 pcs
EXPE12-□, 15-□ models : M3-10 x 8 pcs
EXPE20-□ models : M4-12 x 8 pcs
EXPE24-□, 30-□ models : M5-12 x 8 pcs
※Hexagonal wrench included.

Components

No.	Part name	Pcs	Material	Color / Finish
1	Panel	2	Aluminium A1100P	Metallic silver / Painted (Conductive inside)
2	Top cover	1	Extruded aluminium A6063S-T5	Metallic silver / Painted (Unfinished inside)
3	Bottom cover	1	Extruded aluminium A6063S-T5	Metallic silver / Painted (Unfinished inside)
4	Exterior frame	2	PC+ABS Flame-resistant	Black • Gray / Unpainted Indigo • Navy • Lime • Yellow • Orange • Red / Painted
5	Corner guard	8	Silicone	Dark gray • Black
6	Fabric-over-foam gasket	2	Conductive fabric : TPE	Metallic gray
7	Screw (Hexagonal)	8	Stainless steel	Unfinished

■ See page 217 ~ 220 for Top / Bottom cover dimensions

Color Type

Code	SB Silver / Black	SG Silver / Gray	SI Silver / Indigo	SN Silver / Navy
Color				
Code	**SL Silver / Lime**	**SY Silver / Yellow**	**SO Silver / Orange**	**SR Silver / Red**
Color				

EXPE dimensions

■ DXF/DWG/PDF/STP drawings available on our website.

※c = Top / Bottom cover length.

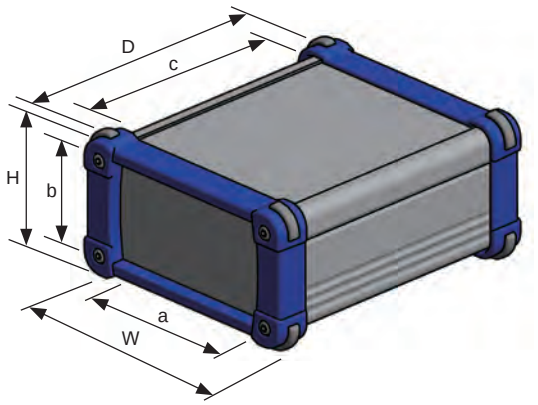

How to install shield gaskets

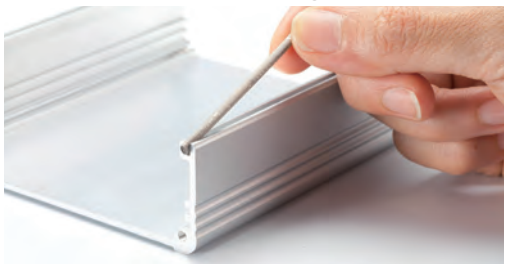

■ Insert fabric-over-foam gaskets into the joint-grooves on both sides of the bottom cover.

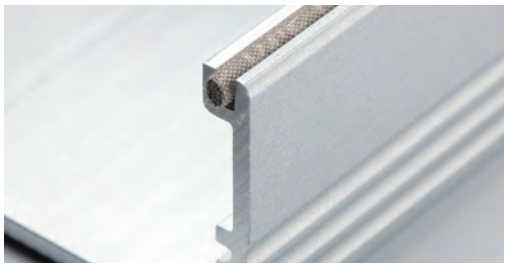

■ Ensure that a small portion of the fabric-over-foam gasket protrudes out in order to maintain connections with the end panels.

Product no. / Dimensions

■ Please suffix color code at the end of the product number.

Product no.	External dimensions			Internal dimensions		
	W	H	D	a	b	c
EXPE 7- 3- 6□□	69	34	60	46	19.6	46
EXPE 7- 3- 9□□	69	34	87	46	19.6	73
EXPE 7- 3-11□□	69	34	110	46	19.6	96
EXPE 7- 4- 6□□	69	44	60	46	29,6	46
EXPE 7- 4- 9□□	69	44	87	46	29,6	73
EXPE 7- 4-11□□	69	44	110	46	29,6	96
EXPE 7- 6- 6□□	69	59	60	46	44.6	46
EXPE 7- 6- 9□□	69	59	87	46	44.6	73
EXPE 7- 6-11□□	69	59	110	46	44.6	96
EXPE 9- 4- 7□□	89	39	70	66	24.6	56
EXPE 9- 4-10□□	89	39	100	66	24.6	86
EXPE 9- 4-13□□	89	39	130	66	24.6	116
EXPE 9- 5- 7□□	89	49	70	66	34.6	56
EXPE 9- 5-10□□	89	49	100	66	34.6	86
EXPE 9- 5-13□□	89	49	130	66	34.6	116
EXPE 9- 6- 7□□	89	64	70	66	49.6	56
EXPE 9- 6-10□□	89	64	100	66	49.6	86
EXPE 9- 6-13□□	89	64	130	66	49.6	116
EXPE12- 4- 9□□	116	41	90	88	24	74
EXPE12- 4-13□□	116	41	130	88	24	114
EXPE12- 4-18□□	116	41	176	88	24	160
EXPE12- 6- 9□□	116	56	90	88	39	74
EXPE12- 6-13□□	116	56	130	88	39	114
EXPE12- 6-18□□	116	56	176	88	39	160
EXPE12- 7- 9□□	116	71	90	88	54	74
EXPE12- 7-13□□	116	71	130	88	54	114
EXPE12- 7-18□□	116	71	176	88	54	160
EXPE15- 5-11□□	151	46	110	106.8	29	93
EXPE15- 5-15□□	151	46	150	106.8	29	133
EXPE15- 5-20□□	151	46	200	106.8	29	183
EXPE15- 6-11□□	151	61	110	106.8	44	93
EXPE15- 6-15□□	151	61	150	106.8	44	133
EXPE15- 6-20□□	151	61	200	106.8	44	183
EXPE15- 8-11□□	151	81	110	106.8	64	93
EXPE15- 8-15□□	151	81	150	106.8	64	133
EXPE15- 8-20□□	151	81	200	106.8	64	183
EXPE15-10-11□□	151	101	110	106.8	84	93
EXPE15-10-15□□	151	101	150	106.8	84	133
EXPE15-10-20□□	151	101	200	106.8	84	183

■ Custom length is available

Product no.	External dimensions			Internal dimensions		
	W	H	D	a	b	c
EXPE20- 6-14□□	199	56	140	131	35	120
EXPE20- 6-19□□	199	56	192	131	35	172
EXPE20- 6-25□□	199	56	245	131	35	225
EXPE20- 6-30□□	199	56	300	131	35	280
EXPE20- 7-14□□	199	74	140	131	53	120
EXPE20- 7-19□□	199	74	192	131	53	172
EXPE20- 7-25□□	199	74	245	131	53	225
EXPE20- 7-30□□	199	74	300	131	53	280
EXPE20- 9-14□□	199	94	140	131	73	120
EXPE20- 9-19□□	199	94	192	131	73	172
EXPE20- 9-25□□	199	94	245	131	73	225
EXPE20- 9-30□□	199	94	300	131	73	280
EXPE20-12-14□□	199	119	140	131	98	120
EXPE20-12-19□□	199	119	192	131	98	172
EXPE20-12-25□□	199	119	245	131	98	225
EXPE20-12-30□□	199	119	300	131	98	280
EXPE24- 6-17□□	244	64	170	176	43	147
EXPE24- 6-23□□	244	64	230	176	43	207
EXPE24- 6-29□□	244	64	290	176	43	267
EXPE24- 6-35□□	244	64	350	176	43	327
EXPE24- 9-17□□	244	89	170	176	68	147
EXPE24- 9-23□□	244	89	230	176	68	207
EXPE24- 9-29□□	244	89	290	176	68	267
EXPE24- 9-35□□	244	89	350	176	68	327
EXPE24-11-17□□	244	114	170	176	93	147
EXPE24-11-23□□	244	114	230	176	93	207
EXPE24-11-29□□	244	114	290	176	93	267
EXPE24-11-35□□	244	114	350	176	93	327
NEW EXPE30- 9-25□□	300	90	250	230	68	228
NEW EXPE30- 9-32□□	300	90	320	230	68	298
NEW EXPE30- 9-40□□	300	90	400	230	68	378
NEW EXPE30-14-25□□	300	140	250	230	118	228
NEW EXPE30-14-32□□	300	140	320	230	118	298
NEW EXPE30-14-40□□	300	140	400	230	118	378

Following models are suitable for Mini-ITX board size.
EXPE20-7-19□□
EXPE20-9-19□□
EXPE20-12-19□□

EXW series IP65 ALUMINIUM CASE with CORNER GUARD

- IP65 is made possible by the sealing of between top & bottom covers and end panels with gaskets.
- Available in 39 different sizes and 6 different color combinations by 2 body frame and 3 end panel colors.
- Custom length is available.

Technical Data
Protection class : IP65 ■ Not suitable for environments with direct rainfall.

Included screws
EXW7-□, 9-□ models : M2.5-8 x 8 pcs
EXW12-□, 15-□ models: M3-10 x 8 pcs
※Hexagonal wrench included.

Components

No.	Part name	Pcs	Material	Color / Finish
1	Panel	2	PC+ABS Flame-resistant	Black • Gray / Unpainted Navy / Painted
2	Top cover	1	Extruded aluminium A6063S-T5	Silver • Black / Anodized with clear coating
3	Bottom cover	1	Extruded aluminium A6063S-T5	Silver • Black / Anodized with clear coating
4	Panel gasket	2	Silicone	Charcoal gray*
5	Cover gasket	2	Silicone sponge	White gray
6	Screw (Hexagonal)	8	Stainless steel	Unfinished

*Dark gray and black color panel gasket will be changed to charcoal gray upon depletion of inventory.

■ See page 217 ~ 220 for Top / Bottom cover dimensions

Color Type

Code	SB Silver / Black	SG Silver / Gray	SN Silver / Navy
Color			
Code	**BB Black / Black**	**BG Black / Gray**	**BN Black / Navy**
Color			

EXW dimensions

■ DXF/DWG/PDF/STP drawings available on our website.
※c = Top / Bottom cover length.

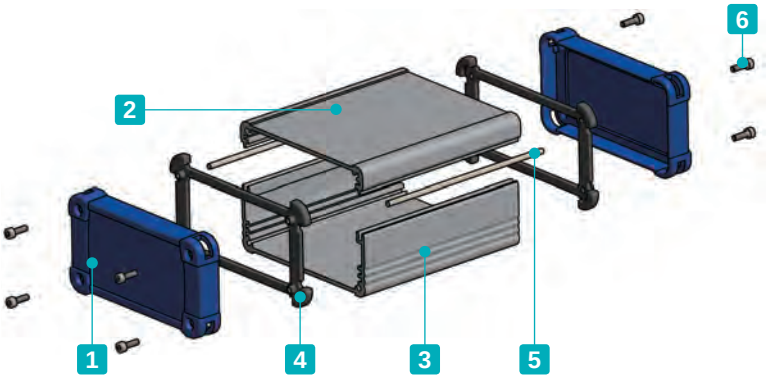

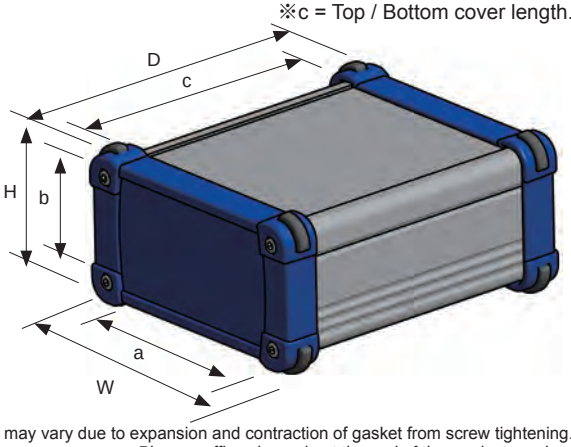

Product no. / Dimensions

■ Listed D dimension may vary due to expansion and contraction of gasket from screw tightening.
■ Please suffix color code at the end of the product number.

Product no.	External dimensions			Internal dimensions		
	W	H	D	a	b	c
EXW 7- 3- 6□□	69	34	57	47	20	46
EXW 7- 3- 9□□	69	34	84	47	20	73
EXW 7- 3-11□□	69	34	107	47	20	96
EXW 7- 4- 6□□	69	44	57	47	30	46
EXW 7- 4- 9□□	69	44	84	47	30	73
EXW 7- 4-11□□	69	44	107	47	30	96
EXW 7- 6- 6□□	69	59	57	47	45	46
EXW 7- 6- 9□□	69	59	84	47	45	73
EXW 7- 6-11□□	69	59	107	47	45	96
EXW 9- 4- 7□□	89	39	68	67	25	56
EXW 9- 4-10□□	89	39	98	67	25	86
EXW 9- 4-13□□	89	39	128	67	25	116
EXW 9- 5- 7□□	89	49	68	67	35	56
EXW 9- 5-10□□	89	49	98	67	35	86
EXW 9- 5-13□□	89	49	128	67	35	116
EXW 9- 6- 7□□	89	64	68	67	50	56
EXW 9- 6-10□□	89	64	98	67	50	86
EXW 9- 6-13□□	89	64	128	67	50	116
EXW12- 4- 9□□	116	41	87	89	24	74
EXW12- 4-13□□	116	41	127	89	24	114
EXW12- 4-18□□	116	41	173	89	24	160
EXW12- 6- 9□□	116	56	87	89	39	74
EXW12- 6-13□□	116	56	127	89	39	114
EXW12- 6-18□□	116	56	173	89	39	160
EXW12- 7- 9□□	116	71	87	89	54	74
EXW12- 7-13□□	116	71	127	89	54	114
EXW12- 7-18□□	116	71	173	89	54	160
EXW15- 5-11□□	151	46	106	107	29	93
EXW15- 5-15□□	151	46	146	107	29	133
EXW15- 5-20□□	151	46	196	107	29	183
EXW15- 6-11□□	151	61	106	107	44	93
EXW15- 6-15□□	151	61	146	107	44	133
EXW15- 6-20□□	151	61	196	107	44	183
EXW15- 8-11□□	151	81	106	107	64	93
EXW15- 8-15□□	151	81	146	107	64	133
EXW15- 8-20□□	151	81	196	107	64	183
EXW15-10-11□□	151	101	106	107	84	93
EXW15-10-15□□	151	101	146	107	84	133
EXW15-10-20□□	151	101	196	107	84	183

■ Custom length is available

How to install cover gaskets

■ Insert cover gaskets into the joint-grooves on both sides of the bottom cover.

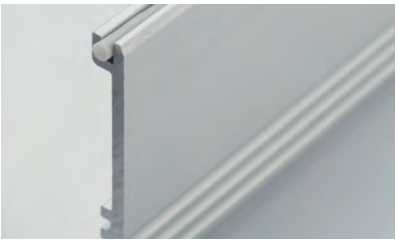

■ Ensure that a small portion of the cover gaskets protrude out in order to maintain connections with the end panels.

EXPF series FLANGED ALUMINIUM PANEL CASE

- Equipped with flanged frame for easy wall mounting.
- Available in 67 different sizes and 6 different color combinations by 2 body frame and 3 end panel colors.
- Custom length is available.

Included screws
EXPF 7-□, 9-□ models : M2.5-8 x 8 pcs
EXPF11-□, 15-□ models : M3-10 x 8 pcs
EXPF20-□ models : M4-12 x 8 pcs
EXPF24-□ models : M5-12 x 8 pcs
※Hexagonal wrench included.

Components

No.	Part name	Pcs	Material	Color / Finish
1	Panel	2	Aluminium A1100P	Silver / Anodized • Black / Painted
2	Top cover	1	Extruded aluminium A6063S-T5	Silver • Black / Anodized with clear coating
3	Bottom cover	1	Extruded aluminium A6063S-T5	Silver • Black / Anodized with clear coating
4	Flanged frame	2	PC+ABS Flame-resistant	Black • Gray / Unpainted Navy / Painted
5	Screw (Hexagonal)	8	Stainless steel	Unfinished

■ See page 217 ~ 220 for Top / Bottom cover dimensions

Color Type

Code	SB Silver / Black	SG Silver / Gray	SN Silver / Navy
Color			
Code	**BB Black / Black**	**BG Black / Gray**	**BN Black / Navy**
Color			

EXPF dimensions

■ DXF/DWG/PDF/STP drawings available on our website.

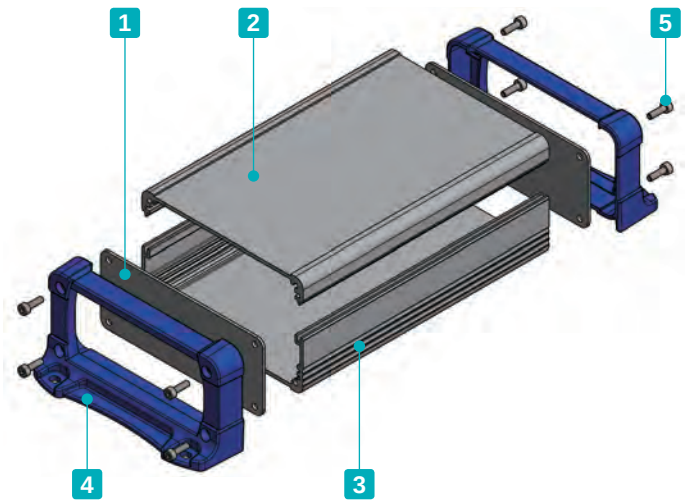

※c = Top / Bottom cover length.

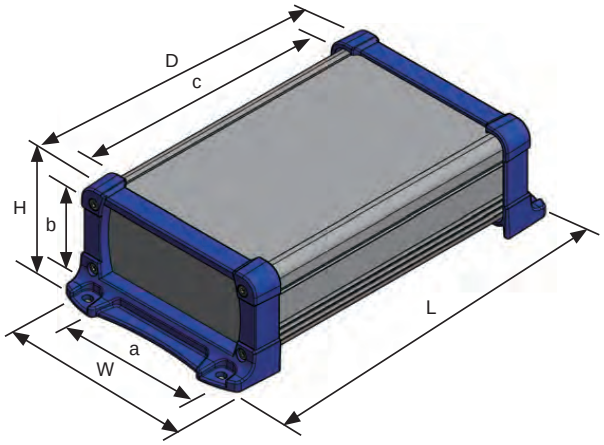

Product no. / Dimensions

■ Please suffix color code at the end of the product number.

Product no.	External dimensions				Internal dimensions		
	W	H	D	L	a	b	c
EXPF 7- 3- 6□□	66	34	60	84	46	19.6	46
EXPF 7- 3- 9□□	66	34	87	111	46	19.6	73
EXPF 7- 3-11□□	66	34	110	134	46	19.6	96
EXPF 7- 4- 6□□	66	44	60	84	46	29.6	46
EXPF 7- 4- 9□□	66	44	87	111	46	29.6	73
EXPF 7- 4-11□□	66	44	110	134	46	29.6	96
EXPF 7- 6- 6□□	66	59	60	84	46	44.6	46
EXPF 7- 6- 9□□	66	59	87	111	46	44.6	73
EXPF 7- 6-11□□	66	59	110	134	46	44.6	96
EXPF 9- 4- 7□□	86	39	70	95.8	66	24.6	56
EXPF 9- 4-10□□	86	39	100	125.8	66	24.6	86
EXPF 9- 4-13□□	86	39	130	155.8	66	24.6	116
EXPF 9- 5- 7□□	86	49	70	95.8	66	34.6	56
EXPF 9- 5-10□□	86	49	100	125.8	66	34.6	86
EXPF 9- 5-13□□	86	49	130	155.8	66	34.6	116
EXPF 9- 6- 7□□	86	64	70	95.8	66	49.6	56
EXPF 9- 6-10□□	86	64	100	125.8	66	49.6	86
EXPF 9- 6-13□□	86	64	130	155.8	66	49.6	116
EXPF11- 4- 9□□	113	41.5	90	121.8	88	24	74
EXPF11- 4-13□□	113	41.5	130	161.8	88	24	114
EXPF11- 4-18□□	113	41.5	176	207.8	88	24	160
EXPF11- 6- 9□□	113	56.5	90	121.8	88	39	74
EXPF11- 6-13□□	113	56.5	130	161.8	88	39	114
EXPF11- 6-18□□	113	56.5	176	207.8	88	39	160
EXPF11- 7- 9□□	113	71.5	90	121.8	88	54	74
EXPF11- 7-13□□	113	71.5	130	161.8	88	54	114
EXPF11- 7-18□□	113	71.5	176	207.8	88	54	160
EXPF15- 5-11□□	148	47	110	149.2	106.8	29	93
EXPF15- 5-15□□	148	47	150	189.2	106.8	29	133
EXPF15- 5-20□□	148	47	200	239.2	106.8	29	183
EXPF15- 6-11□□	148	62	110	149.2	106.8	44	93
EXPF15- 6-15□□	148	62	150	189.2	106.8	44	133
EXPF15- 6-20□□	148	62	200	239.2	106.8	44	183
EXPF15- 8-11□□	148	82	110	149.2	106.8	64	93
EXPF15- 8-15□□	148	82	150	189.2	106.8	64	133
EXPF15- 8-20□□	148	82	200	239.2	106.8	64	183
EXPF15-10-11□□	148	102	110	149.2	106.8	84	93
EXPF15-10-15□□	148	102	150	189.2	106.8	84	133
EXPF15-10-20□□	148	102	200	239.2	106.8	84	183

Product no.	External dimensions				Internal dimensions		
	W	H	D	L	a	b	c
EXPF20- 6-14□□	195	57	140	188.6	131	35	120
EXPF20- 6-19□□	195	57	192	240.6	131	35	172
EXPF20- 6-25□□	195	57	245	293.6	131	35	225
EXPF20- 6-30□□	195	57	300	348.6	131	35	280
EXPF20- 8-14□□	195	75	140	188.6	131	53	120
EXPF20- 8-19□□	195	75	192	240.6	131	53	172
EXPF20- 8-25□□	195	75	245	293.6	131	53	225
EXPF20- 8-30□□	195	75	300	348.6	131	53	280
EXPF20-10-14□□	195	95	140	188.6	131	73	120
EXPF20-10-19□□	195	95	192	240.6	131	73	172
EXPF20-10-25□□	195	95	245	293.6	131	73	225
EXPF20-10-30□□	195	95	300	348.6	131	73	280
EXPF20-12-14□□	195	120	140	188.6	131	98	120
EXPF20-12-19□□	195	120	192	240.6	131	98	172
EXPF20-12-25□□	195	120	245	293.6	131	98	225
EXPF20-12-30□□	195	120	300	348.6	131	98	280
EXPF24- 7-17□□	240	65	170	218.6	176	43	147
EXPF24- 7-23□□	240	65	230	278.6	176	43	207
EXPF24- 7-29□□	240	65	290	338.6	176	43	267
EXPF24- 7-35□□	240	65	350	398.6	176	43	327
EXPF24- 9-17□□	240	90	170	218.6	176	68	147
EXPF24- 9-23□□	240	90	230	278.6	176	68	207
EXPF24- 9-29□□	240	90	290	338.6	176	68	267
EXPF24- 9-35□□	240	90	350	398.6	176	68	327
EXPF24-12-17□□	240	115	170	218.6	176	93	147
EXPF24-12-23□□	240	115	230	278.6	176	93	207
EXPF24-12-29□□	240	115	290	338.6	176	93	267
EXPF24-12-35□□	240	115	350	398.6	176	93	327

■ Custom length is available.

Following models are suitable for Mini-ITX board size.

EXPF20-8-19□□

EXPF20-10-19□□

EXPF20-12-19□□

EXEF series FLANGED ALUMINIUM EMC SHIELDED CASE

EMC Shielding Effects

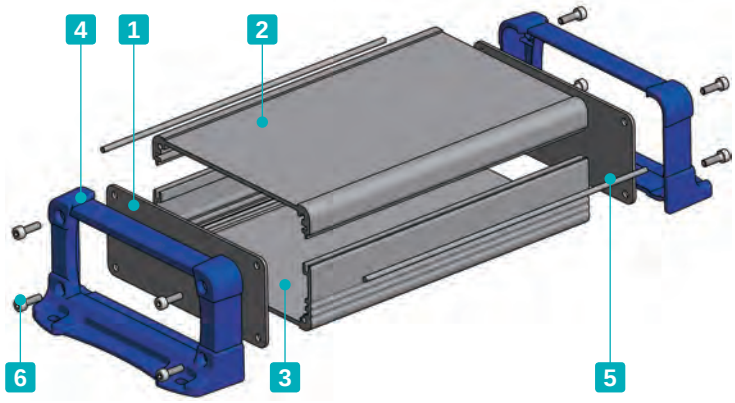

- EMC shielding is achieved by having the unfinished inner sides of the top/bottom covers and panels, as well as the fabric-over-foam gasket in contact with one another.
- Equipped with flanged frame for easy wall mounting.
- Available in 67 different sizes and 3 different color combinations.

Included screws
EXEF7-□, 9-□ models : M2.5-8 x 8 pcs
EXEF11-□, 15-□ models : M3-10 x 8 pcs
EXEF20-□ models : M4-12 x 8 pcs
EXEF24-□ models : M5-12 x 8 pcs
※Hexagonal wrench included.

Components

No.	Part name	Pcs	Material	Color / Finish
1	Panel	2	Aluminium A1100P	Metallic silver / Painted (Conductive inside)
2	Top cover	1	Extruded aluminium A6063S-T5	Metallic silver / Painted (Unfinished inside)
3	Bottom cover	1	Extruded aluminium A6063S-T5	Metallic silver / Painted (Unfinished inside)
4	Flanged frame	2	PC+ABS Flame-resistant	Black • Gray / Unpainted Navy / Painted
5	Fabric-over-foam gasket	2	Conductive fabric : TPE	Metallic gray
6	Screw (Hexagonal)	8	Stainless steel	Unfinished

■ See page 217 ~ 220 for Top / Bottom cover dimensions

Color Type

Code	SB Silver / Black	SG Silver / Gray	SN Silver / Navy
Color			

EXEF dimensions

※c = Top / Bottom cover length.

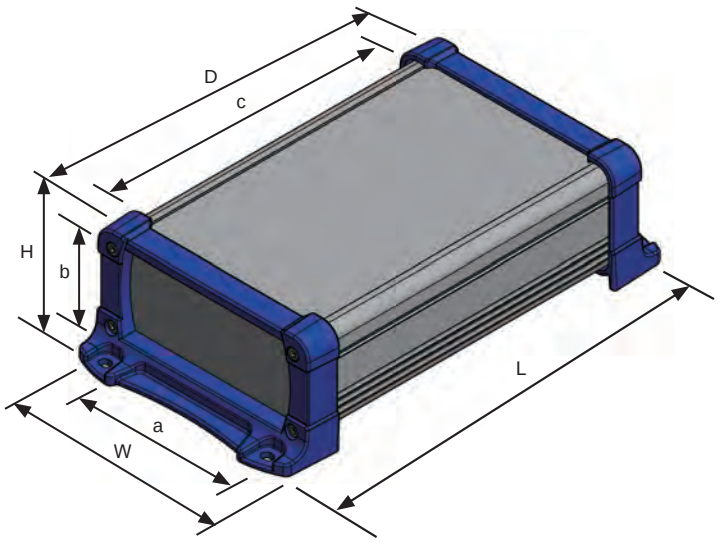

■ DXF/DWG/PDF/STP drawings available on our website.

How to install shield gaskets

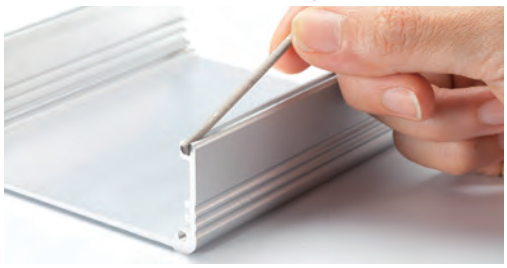

■ Insert fabric-over-foam gaskets into the joint-grooves on both sides of the bottom cover.

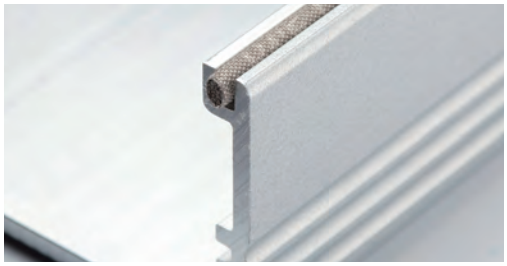

■ Ensure that a small portion of the fabric-over-foam gaskets protrude out in order to maintain connections with the end panels.

Product no. / Dimensions

■ Please suffix color code at the end of the product number.

Product no.	External dimensions				Internal dimensions		
	W	H	D	L	a	b	c
EXEF 7- 3- 6□□	66	34	60	84	46	19.6	46
EXEF 7- 3- 9□□	66	34	87	111	46	19.6	73
EXEF 7- 3-11□□	66	34	110	134	46	19.6	96
EXEF 7- 4- 6□□	66	44	60	84	46	29.6	46
EXEF 7- 4- 9□□	66	44	87	111	46	29.6	73
EXEF 7- 4-11□□	66	44	110	134	46	29.6	96
EXEF 7- 6- 6□□	66	59	60	84	46	44.6	46
EXEF 7- 6- 9□□	66	59	87	111	46	44.6	73
EXEF 7- 6-11□□	66	59	110	134	46	44.6	96
EXEF 9- 4- 7□□	86	39	70	95.8	66	24.6	56
EXEF 9- 4-10□□	86	39	100	125.8	66	24.6	86
EXEF 9- 4-13□□	86	39	130	155.8	66	24.6	116
EXEF 9- 5- 7□□	86	49	70	95.8	66	34.6	56
EXEF 9- 5-10□□	86	49	100	125.8	66	34.6	86
EXEF 9- 5-13□□	86	49	130	155.8	66	34.6	116
EXEF 9- 6- 7□□	86	64	70	95.8	66	49.6	56
EXEF 9- 6-10□□	86	64	100	125.8	66	49.6	86
EXEF 9- 6-13□□	86	64	130	155.8	66	49.6	116
EXEF11- 4- 9□□	113	41.5	90	121.8	88	24	74
EXEF11- 4-13□□	113	41.5	130	161.8	88	24	114
EXEF11- 4-18□□	113	41.5	176	207.8	88	24	160
EXEF11- 6- 9□□	113	56.5	90	121.8	88	39	74
EXEF11- 6-13□□	113	56.5	130	161.8	88	39	114
EXEF11- 6-18□□	113	56.5	176	207.8	88	39	160
EXEF11- 7- 9□□	113	71.5	90	121.8	88	54	74
EXEF11- 7-13□□	113	71.5	130	161.8	88	54	114
EXEF11- 7-18□□	113	71.5	176	207.8	88	54	160
EXEF15- 5-11□□	148	47	110	149.2	106.8	29	93
EXEF15- 5-15□□	148	47	150	189.2	106.8	29	133
EXEF15- 5-20□□	148	47	200	239.2	106.8	29	183
EXEF15- 6-11□□	148	62	110	149.2	106.8	44	93
EXEF15- 6-15□□	148	62	150	189.2	106.8	44	133
EXEF15- 6-20□□	148	62	200	239.2	106.8	44	183
EXEF15- 8-11□□	148	82	110	149.2	106.8	64	93
EXEF15- 8-15□□	148	82	150	189.2	106.8	64	133
EXEF15- 8-20□□	148	82	200	239.2	106.8	64	183
EXEF15-10-11□□	148	102	110	149.2	106.8	84	93
EXEF15-10-15□□	148	102	150	189.2	106.8	84	133
EXEF15-10-20□□	148	102	200	239.2	106.8	84	183

Product no.	External dimensions				Internal dimensions		
	W	H	D	L	a	b	c
EXEF20- 6-14□□	195	57	140	188.6	131	35	120
EXEF20- 6-19□□	195	57	192	240.6	131	35	172
EXEF20- 6-25□□	195	57	245	293.6	131	35	225
EXEF20- 6-30□□	195	57	300	348.6	131	35	280
EXEF20- 8-14□□	195	75	140	188.6	131	53	120
EXEF20- 8-19□□	195	75	192	240.6	131	53	172
EXEF20- 8-25□□	195	75	245	293.6	131	53	225
EXEF20- 8-30□□	195	75	300	348.6	131	53	280
EXEF20-10-14□□	195	95	140	188.6	131	73	120
EXEF20-10-19□□	195	95	192	240.6	131	73	172
EXEF20-10-25□□	195	95	245	293.6	131	73	225
EXEF20-10-30□□	195	95	300	348.6	131	73	280
EXEF20-12-14□□	195	120	140	188.6	131	98	120
EXEF20-12-19□□	195	120	192	240.6	131	98	172
EXEF20-12-25□□	195	120	245	293.6	131	98	225
EXEF20-12-30□□	195	120	300	348.6	131	98	280
EXEF24- 7-17□□	240	65	170	218.6	176	43	147
EXEF24- 7-23□□	240	65	230	278.6	176	43	207
EXEF24- 7-29□□	240	65	290	338.6	176	43	267
EXEF24- 7-35□□	240	65	350	398.6	176	43	327
EXEF24- 9-17□□	240	90	170	218.6	176	68	147
EXEF24- 9-23□□	240	90	230	278.6	176	68	207
EXEF24- 9-29□□	240	90	290	338.6	176	68	267
EXEF24- 9-35□□	240	90	350	398.6	176	68	327
EXEF24-12-17□□	240	115	170	218.6	176	93	147
EXEF24-12-23□□	240	115	230	278.6	176	93	207
EXEF24-12-29□□	240	115	290	338.6	176	93	267
EXEF24-12-35□□	240	115	350	398.6	176	93	327

Following models are suitable for Mini-ITX board size.

EXEF20-8-19□□

EXEF20-10-19□□

EXEF20-12-19□□

EXWF series IP65 FLANGED ALUMINIUM CASE

NEW SIZE

IP65 IP54

- Waterproof case available in 73 different sizes and 6 different color combinations.
- Equipped with flanged frame for easy wall mounting. Suitable to be used as wall mounted controller and transmitter.
- Custom length is available.

Technical Data

Protection class : IP65 • IP54
Protection class varies by size.
■ Not suitable for environments with direct rainfall.

Included screws
EXWF7-□, 9-□ models : M2.5-8 x 8 pcs
EXWF11-□, 15-□ models : M3-10 x 8 pcs
EXWF20-□ models : M4-12 x 8 pcs
EXWF24-□, 30-□ models : M5-12 x 8 pcs
※Hexagonal wrench included.

Components

■ See page 217 ~ 220 for Top / Bottom cover dimensions.

No.	Part name	Pcs	Material	Color / Finish
1	Flanged end panel	2	PC+ABS Flame-resistant	Black • Gray / Unpainted Navy / Painted
2	Top cover	1	Extruded aluminium A6063S-T5	Silver • Black / Anodized with clear coating
3	Bottom cover	1	Extruded aluminium A6063S-T5	Silver • Black / Anodized with clear coating
4	Panel gasket	2	Silicone • EPDM sponge	Black
5	Cover gasket	2	Silicone sponge	White gray
6	Screw (Hexagonal)	8	Stainless steel	Unfinished
–	O-ring*	8	NBR	Black

*O-ring is only available for EXWF20-□, 24-□, and 30-□ models.

■ Panel gasket material : Silicone : EXWF7-□ ~ 15-□ models • EPDM sponge : EXWF20-□ ~ 30-□ models.

Color Type

Code	S B Silver / Black	S G Silver / Gray	S N Silver / Navy
Color			
Code	**B B Black / Black**	**B G Black / Gray**	**B N Black / Navy**
Color			

EXWF dimensions

■ DXF/DWG/PDF/STP drawings available on our website.

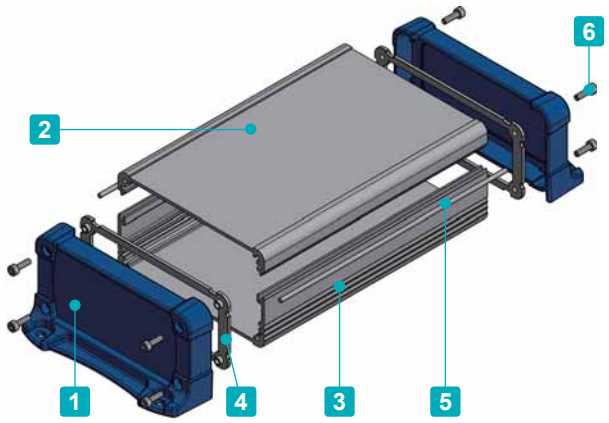

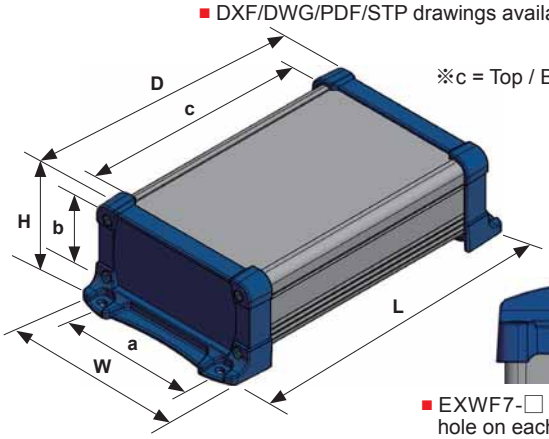

※c = Top / Bottom cover length.

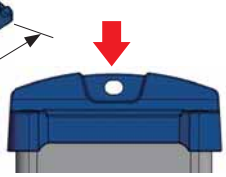

■ EXWF7-□ models have one hole on each flanged end panel

■ Listed D dimension may vary due to expansion and contraction of gasket from screw tightening.

■ Please suffix color code at the end of the product number.

Product no. / Dimensions

Product no.	IP Code	External dimensions				Internal dimensions		
		W	H	D	L	a	b	c
EXWF 7- 3- 6□□	IP65	66	34	57	82	47	20	46
EXWF 7- 3- 9□□	IP65	66	34	84	109	47	20	73
EXWF 7- 3-11□□	IP65	66	34	107	132	47	20	96
EXWF 7- 4- 6□□	IP65	66	44	57	82	47	30	46
EXWF 7- 4- 9□□	IP65	66	44	84	109	47	30	73
EXWF 7- 4-11□□	IP65	66	44	107	132	47	30	96
EXWF 7- 6- 6□□	IP65	66	59	57	82	47	45	46
EXWF 7- 6- 9□□	IP65	66	59	84	109	47	45	73
EXWF 7- 6-11□□	IP65	66	59	107	132	47	45	96
EXWF 9- 4- 7□□	IP65	86	39	68	94.8	67	25	56
EXWF 9- 4-10□□	IP65	86	39	98	124.8	67	25	86
EXWF 9- 4-13□□	IP65	86	39	128	154.8	67	25	116
EXWF 9- 5- 7□□	IP65	86	49	68	94.8	67	35	56
EXWF 9- 5-10□□	IP65	86	49	98	124.8	67	35	86
EXWF 9- 5-13□□	IP65	86	49	128	154.8	67	35	116
EXWF 9- 6- 7□□	IP65	86	64	68	94.8	67	50	56
EXWF 9- 6-10□□	IP65	86	64	98	124.8	67	50	86
EXWF 9- 6-13□□	IP65	86	64	128	154.8	67	50	116
EXWF11- 4- 9□□	IP65	113	41.5	87	119.8	89	24	74
EXWF11- 4-13□□	IP65	113	41.5	127	159.8	89	24	114
EXWF11- 4-17□□	IP65	113	41.5	173	205.8	89	24	160
EXWF11- 6- 9□□	IP65	113	56.5	87	119.8	89	39	74
EXWF11- 6-13□□	IP65	113	56.5	127	159.8	89	39	114
EXWF11- 6-17□□	IP65	113	56.5	173	205.8	89	39	160
EXWF11- 7- 9□□	IP65	113	71.5	87	119.8	89	54	74
EXWF11- 7-13□□	IP65	113	71.5	127	159.8	89	54	114
EXWF11- 7-17□□	IP65	113	71.5	173	205.8	89	54	160
EXWF15- 5-11□□	IP65	148	47	106	146.2	107	29	93
EXWF15- 5-15□□	IP65	148	47	146	186.2	107	29	133
EXWF15- 5-20□□	IP65	148	47	196	236.2	107	29	183
EXWF15- 6-11□□	IP65	148	62	106	146.2	107	44	93
EXWF15- 6-15□□	IP65	148	62	146	186.2	107	44	133
EXWF15- 6-20□□	IP65	148	62	196	236.2	107	44	183
EXWF15- 8-11□□	IP65	148	82	106	146.2	107	64	93
EXWF15- 8-15□□	IP65	148	82	146	186.2	107	64	133
EXWF15- 8-20□□	IP65	148	82	196	236.2	107	64	183
EXWF15-10-11□□	IP65	148	102	106	146.2	107	84	93
EXWF15-10-15□□	IP65	148	102	146	186.2	107	84	133
EXWF15-10-20□□	IP65	148	102	196	236.2	107	84	183

Product no.	IP Code	External dimensions				Internal dimensions		
		W	H	D	L	a	b	c
EXWF20- 6-14□□	IP54	195	57	138	186.6	132	35	120
EXWF20- 6-19□□	IP54	195	57	190	238.6	132	35	172
EXWF20- 6-25□□	IP54	195	57	243	291.6	132	35	225
EXWF20- 6-30□□	IP54	195	57	298	346.6	132	35	280
EXWF20- 8-14□□	IP54	195	75	138	186.6	132	53	120
EXWF20- 8-19□□	IP54	195	75	190	238.6	132	53	172
EXWF20- 8-25□□	IP54	195	75	243	291.6	132	53	225
EXWF20- 8-30□□	IP54	195	75	298	346.6	132	53	280
EXWF20-10-14□□	IP54	195	95	138	186.6	132	73	120
EXWF20-10-19□□	IP54	195	95	190	238.6	132	73	172
EXWF20-10-25□□	IP54	195	95	243	291.6	132	73	225
EXWF20-10-30□□	IP54	195	95	298	346.6	132	73	280
EXWF20-12-14□□	IP54	195	120	138	186.6	132	98	120
EXWF20-12-19□□	IP54	195	120	190	238.6	132	98	172
EXWF20-12-25□□	IP54	195	120	243	291.6	132	98	225
EXWF20-12-30□□	IP54	195	120	298	346.6	132	98	280
EXWF24- 7-17□□	IP54	240	65	165	213.6	177	43	147
EXWF24- 7-23□□	IP54	240	65	225	273.6	177	43	207
EXWF24- 7-29□□	IP54	240	65	285	333.6	177	43	267
EXWF24- 7-35□□	IP54	240	65	345	393.6	177	43	327
EXWF24- 9-17□□	IP54	240	90	165	213.6	177	68	147
EXWF24- 9-23□□	IP54	240	90	225	273.6	177	68	207
EXWF24- 9-29□□	IP54	240	90	285	333.6	177	68	267
EXWF24- 9-35□□	IP54	240	90	345	393.6	177	68	327
EXWF24-12-17□□	IP54	240	115	165	213.6	177	93	147
EXWF24-12-23□□	IP54	240	115	225	273.6	177	93	207
EXWF24-12-29□□	IP54	240	115	285	333.6	177	93	267
EXWF24-12-35□□	IP54	240	115	345	393.6	177	93	327
NEW EXWF30- 9-25□□	IP54	298	93	247	295.6	231	68	228
NEW EXWF30- 9-32□□	IP54	298	93	317	365.6	231	68	298
NEW EXWF30- 9-40□□	IP54	298	93	397	445.6	231	68	378
NEW EXWF30-14-25□□	IP54	298	143	247	295.6	231	118	228
NEW EXWF30-14-32□□	IP54	298	143	317	365.6	231	118	298
NEW EXWF30-14-40□□	IP54	298	143	397	445.6	231	118	378

How to install cover gaskets

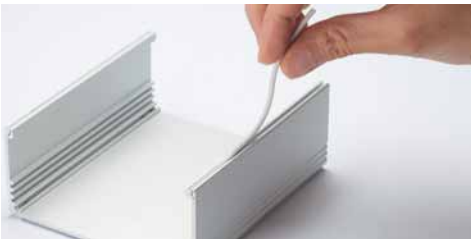

■ Insert cover gasket into the joint-grooves on the bottom cover.

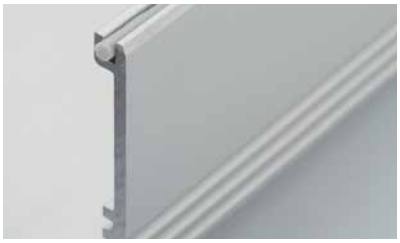

■ Ensure that a small portion of the cover gasket protrudes out in order to maintain a connection with the end panel.

EX series EXTRUDED ALUMINIUM CASE

NEW SIZE

- Simple yet beautifully designed aluminium extrusion enclosure.
- Selectable in 4 different color combinations and 73 different sizes.
- High-end finish is achieved by precision CNC of the end panels.
- Suitable for industrial and audio interface equipment.
- Custom length is available.

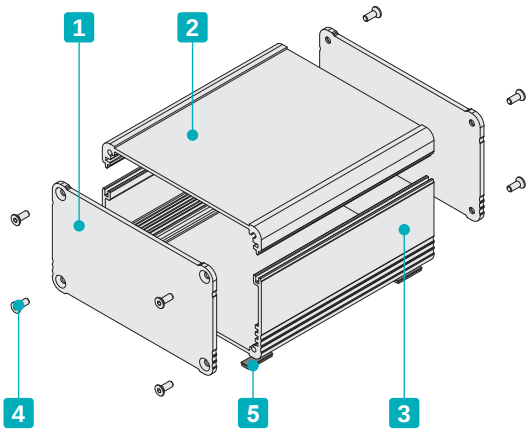

Components

No.	Part name	Pcs	Material	Color / Finish
1	Panel	2	Aluminium A1050P	Silver • Black / Anodized
2	Top cover	1	Extruded aluminium A6063S-T5	Silver • Black / Anodized with clear coating
3	Bottom cover	1	Extruded aluminium A6063S-T5	Silver • Black / Anodized with clear coating
4	Screw (Hexagonal)	8	Stainless steel	Unfinished
5	Rubber feet	4	Polyurethane • Synthetic rubber	Black

- See page 217 ~ 220 for Top / Bottom cover dimensions
- Rubber feet material : Polyurethane : EX6-□ ~ 19-□ models • Synthetic rubber : EX23-□ ~ 29-□ models.

Color Type

Code	S S Silver / Silver	S B Silver / Black	B S Black / Silver	B B Black / Black
Color				

EX dimensions

※c = Top / Bottom cover length.

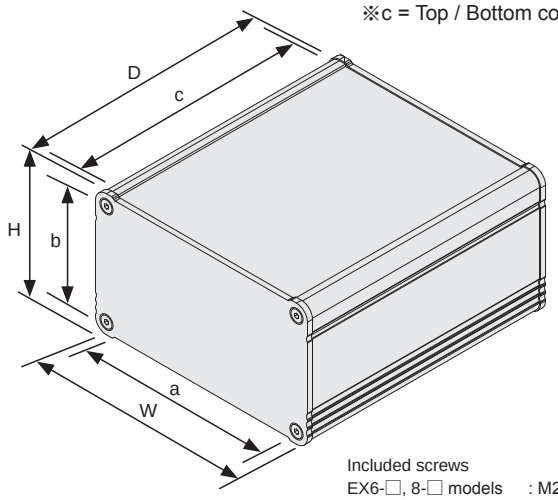

Included screws
EX6-□, 8-□ models : M2.5-8 x 8 pcs
EX11-□, 14-□ models : M3-8 x 8 pcs
EX19-□ models : M4-10 x 8 pcs
EX23-□, 29-□ models : M5-10 x 8 pcs
※Hexagonal wrench included.

■ DXF/DWG/PDF/STP drawings available on our website.

Accessories (Optional parts)

Wall mounting bracket EF series
See page 254

Product no. / Dimensions

■ Please suffix color code at the end of the product number.

Product no.	External dimensions			Internal dimensions		
	W	H	D	a	b	c
EX 6- 3- 5□□	60.6	25.6	50	46	19.6	46
EX 6- 3- 8□□	60.6	25.6	77	46	19.6	73
EX 6- 3-10□□	60.6	25.6	100	46	19.6	96
EX 6- 4- 5□□	60.6	35.6	50	46	29.6	46
EX 6- 4- 8□□	60.6	35.6	77	46	29.6	73
EX 6- 4-10□□	60.6	35.6	100	46	29.6	96
EX 6- 5- 5□□	60.6	50.6	50	46	44.6	46
EX 6- 5- 8□□	60.6	50.6	77	46	44.6	73
EX 6- 5-10□□	60.6	50.6	100	46	44.6	96
EX 8- 3- 6□□	80.6	30.6	60	66	24.6	56
EX 8- 3- 9□□	80.6	30.6	90	66	24.6	86
EX 8- 3-12□□	80.6	30.6	120	66	24.6	116
EX 8- 4- 6□□	80.6	40.6	60	66	34.6	56
EX 8- 4- 9□□	80.6	40.6	90	66	34.6	86
EX 8- 4-12□□	80.6	40.6	120	66	34.6	116
EX 8- 6- 6□□	80.6	55.6	60	66	49.6	56
EX 8- 6- 9□□	80.6	55.6	90	66	49.6	86
EX 8- 6-12□□	80.6	55.6	120	66	49.6	116
EX11- 3- 8□□	106	31	79	88	24	74
EX11- 3-12□□	106	31	119	88	24	114
EX11- 3-16□□	106	31	165	88	24	160
EX11- 5- 8□□	106	46	79	88	39	74
EX11- 5-12□□	106	46	119	88	39	114
EX11- 5-16□□	106	46	165	88	39	160
EX11- 6- 8□□	106	61	79	88	54	74
EX11- 6-12□□	106	61	119	88	54	114
EX11- 6-16□□	106	61	165	88	54	160
EX14- 4-10□□	141	36	98	106.8	29	93
EX14- 4-14□□	141	36	138	106.8	29	133
EX14- 4-19□□	141	36	188	106.8	29	183
EX14- 5-10□□	141	51	98	106.8	44	93
EX14- 5-14□□	141	51	138	106.8	44	133
EX14- 5-19□□	141	51	188	106.8	44	183
EX14- 7-10□□	141	71	98	106.8	64	93
EX14- 7-14□□	141	71	138	106.8	64	133
EX14- 7-19□□	141	71	188	106.8	64	183
EX14- 9-10□□	141	91	98	106.8	84	93
EX14- 9-14□□	141	91	138	106.8	84	133
EX14- 9-19□□	141	91	188	106.8	84	183

■ Custom length is available

Product no.	External dimensions			Internal dimensions		
	W	H	D	a	b	c
EX19- 4-13□□	186.5	43.5	125	131	35	120
EX19- 4-18□□	186.5	43.5	177	131	35	172
EX19- 4-23□□	186.5	43.5	230	131	35	225
EX19- 4-29□□	186.5	43.5	285	131	35	280
EX19- 6-13□□	186.5	61.5	125	131	53	120
EX19- 6-18□□	186.5	61.5	177	131	53	172
EX19- 6-23□□	186.5	61.5	230	131	53	225
EX19- 6-29□□	186.5	61.5	285	131	53	280
EX19- 8-13□□	186.5	81.5	125	131	73	120
EX19- 8-18□□	186.5	81.5	177	131	73	172
EX19- 8-23□□	186.5	81.5	230	131	73	225
EX19- 8-29□□	186.5	81.5	285	131	73	280
EX19-11-13□□	186.5	106.5	125	131	98	120
EX19-11-18□□	186.5	106.5	177	131	98	172
EX19-11-23□□	186.5	106.5	230	131	98	225
EX19-11-29□□	186.5	106.5	285	131	98	280
EX23- 5-15□□	232	52	153	176	43	147
EX23- 5-21□□	232	52	213	176	43	207
EX23- 5-27□□	232	52	273	176	43	267
EX23- 5-33□□	232	52	333	176	43	327
EX23- 8-15□□	232	77	153	176	68	147
EX23- 8-21□□	232	77	213	176	68	207
EX23- 8-27□□	232	77	273	176	68	267
EX23- 8-33□□	232	77	333	176	68	327
EX23-10-15□□	232	102	153	176	93	147
EX23-10-21□□	232	102	213	176	93	207
EX23-10-27□□	232	102	273	176	93	267
EX23-10-33□□	232	102	333	176	93	327
NEW EX29- 8-23□□	287.5	77.5	234	230	68	228
NEW EX29- 8-30□□	287.5	77.5	304	230	68	298
NEW EX29- 8-38□□	287.5	77.5	384	230	68	378
NEW EX29-13-23□□	287.5	127.5	234	230	118	228
NEW EX29-13-30□□	287.5	127.5	304	230	118	298
NEW EX29-13-38□□	287.5	127.5	384	230	118	378

Cross-section view of top & bottom covers

■ DXF/DWG/PDF/STP drawings available on our website.

EXP • EXPE • EXW • EXPF • EXEF • EXWF7-3-□
EX6-3-□

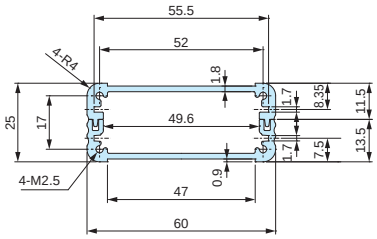

EXP • EXPE • EXW • EXPF • EXEF • EXWF7-4-□
EX6-4-□

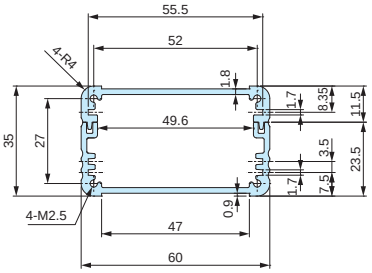

EXP • EXPE • EXW • EXPF • EXEF • EXWF7-6-□
EX6-5-□

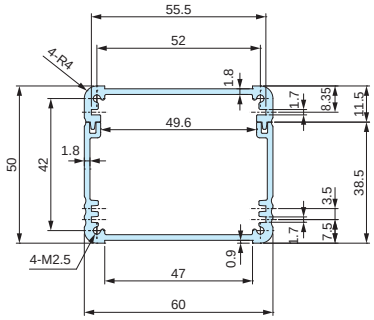

EXP • EXPE • EXW • EXPF • EXEF • EXWF9-4-□
EX8-3-□

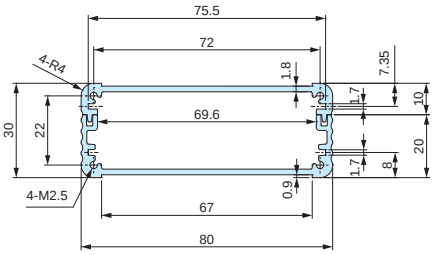

EXP • EXPE • EXW • EXPF • EXEF • EXWF9-5-□
EX8-4-□

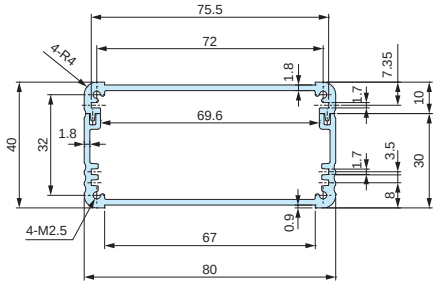

EXP • EXPE • EXW • EXPF • EXEF • EXWF9-6-□
EX8-6-□

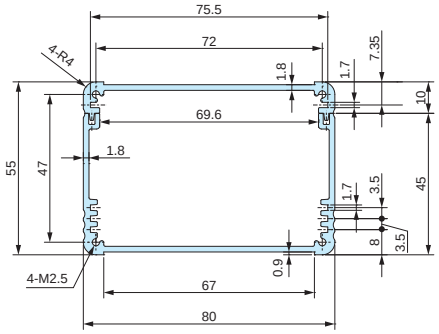

EXP • EXPE • EXW12-4-□
EXPF • EXEF • EXWF11-4-□
EX11-3-□

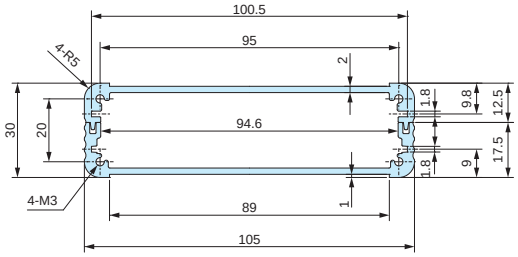

EXP • EXPE • EXW12-6-□
EXPF • EXEF • EXWF11-6-□
EX11-5-□

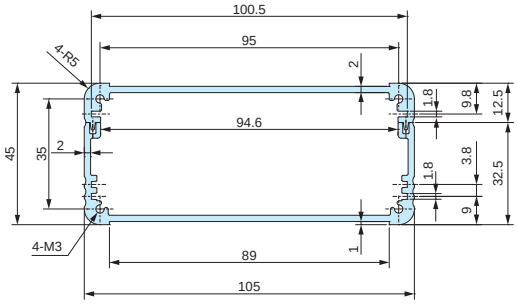

EXP • EXPE • EXW12-7-□
EXPF • EXEF • EXWF11-7-□
EX11-6-□

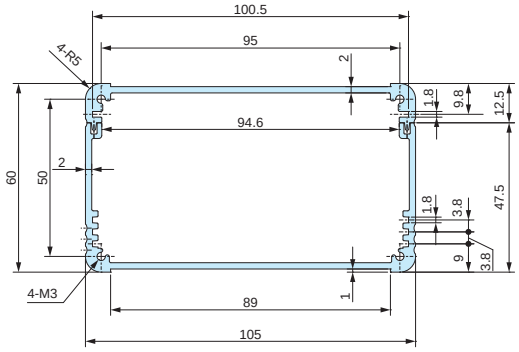

EXP • EXPE • EXW • EXPF • EXEF • EXWF15-5-□
EX14-4-□

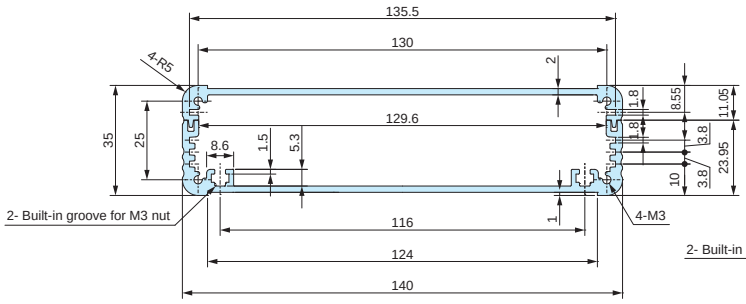

EXP • EXPE • EXW • EXPF • EXEF • EXWF15-6-□
EX14-5-□

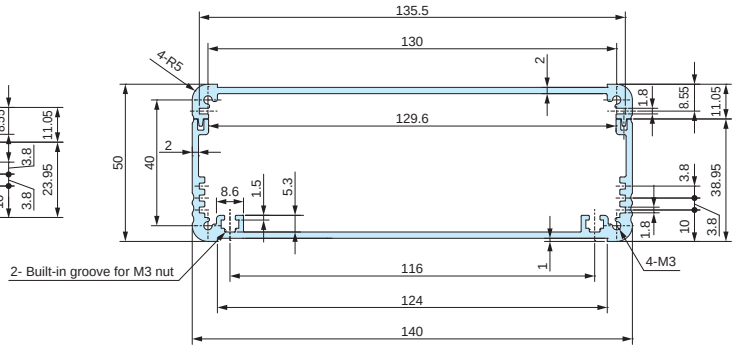

EXP • EXPE • EXW • EXPF • EXEF • EXWF15-8-□
EX14-7-□

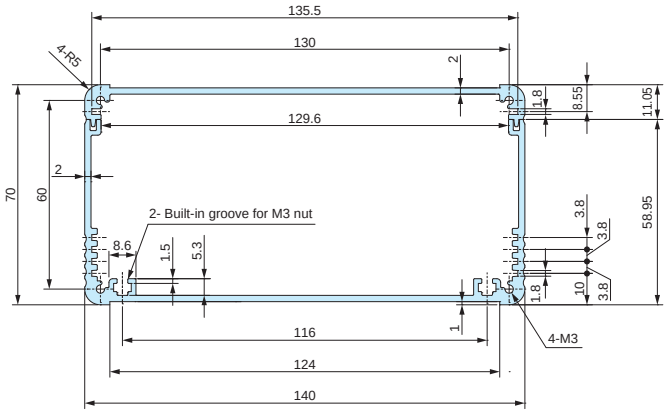

EXP • EXPE • EXW • EXPF • EXEF • EXWF15-10-□
EX14-9-□

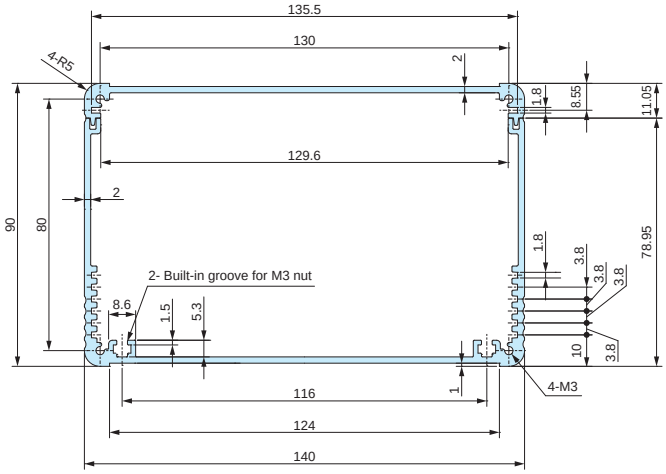

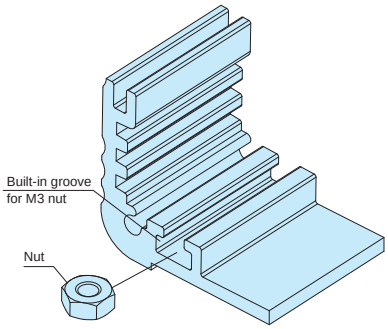

■ Optional sliding nut is available to be used for width 140mm or larger bottom covers.
See page 221 for further details.

Cross-section view of top & bottom covers

■ DXF/DWG/PDF/STP drawings available on our website.

EXPT • EXP • EXPE • EXPF • EXEF • EXWF20-6-□
EX19-4-□

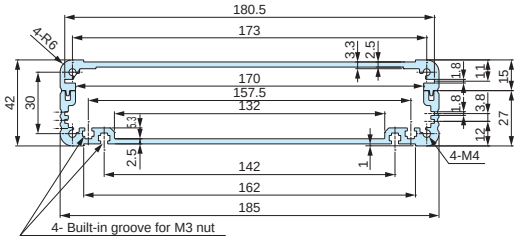

EXPT • EXP • EXPE20-7-□
EXPF • EXEF • EXWF20-8-□
EX19-6-□

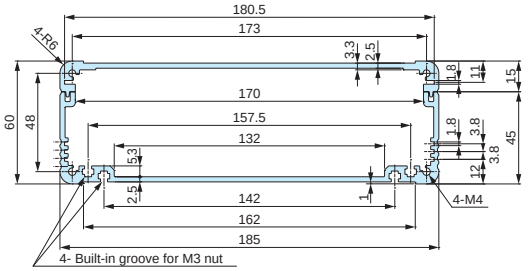

EXPT • EXP • EXPE20-9-□
EXPF • EXEF • EXWF20-10-□
EX19-8-□

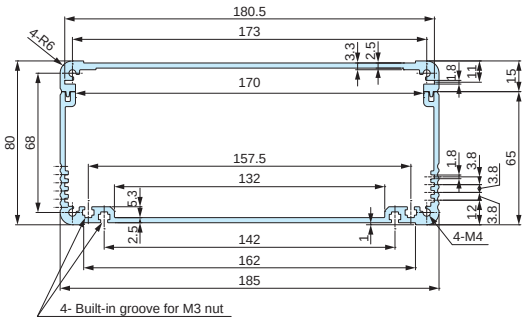

EXPT • EXP • EXPE • EXPF • EXEF • EXWF20-12-□
EX19-11-□

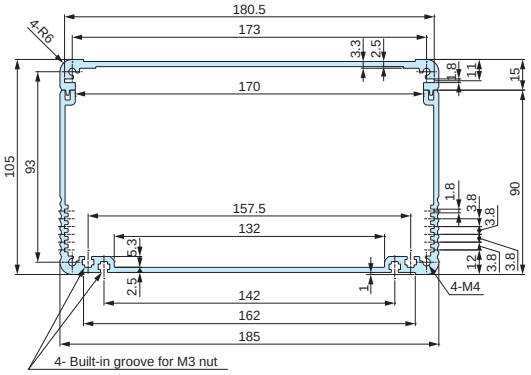

EXPT • EXP • EXPE24-6-□
EXPF • EXEF • EXWF24-7-□
EX23-5-□

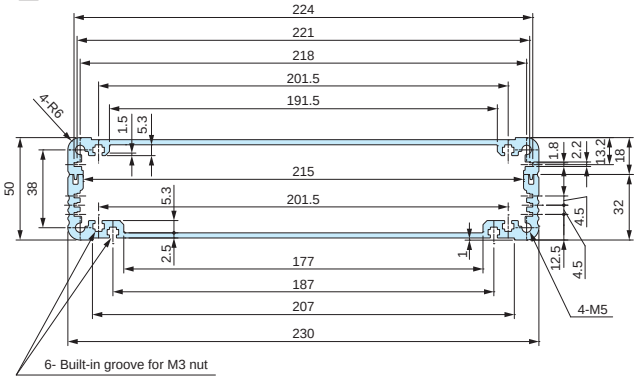

EXPT • EXP • EXPE • EXPF • EXEF • EXWF24-9-□
EX23-8-□

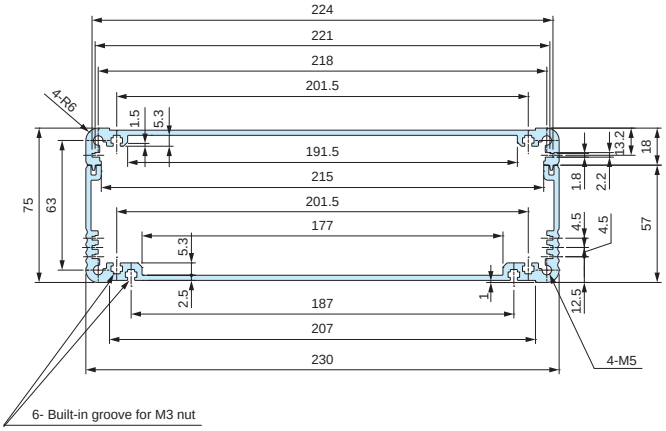

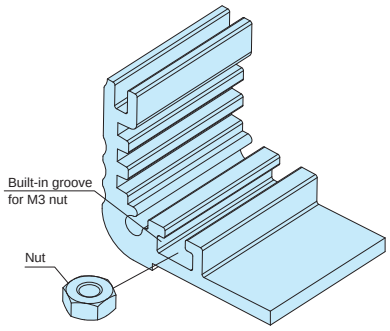

■ Optional sliding nut is available to be used for width 140mm or larger bottom covers.

See page 221 for further details.

EXPT • EXP • EXPE24-11-□
EXPF • EXEF • EXWF24-12-□
EX23-10-□

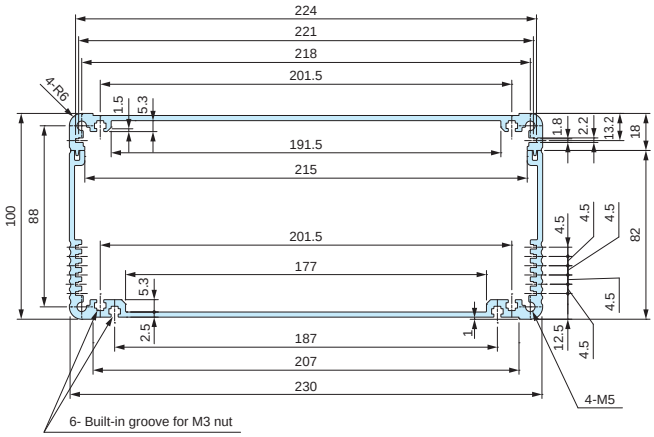

EXPT • EXP • EXPE • EXPF • EXEF • EXWF30-9-□
EX29-8-□

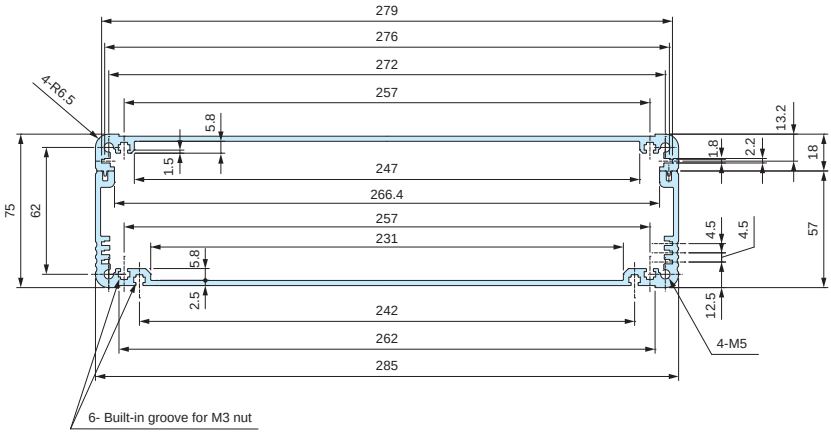

EXPT • EXP • EXPE • EXPF • EXEF • EXWF30-14-□
EX29-13-□

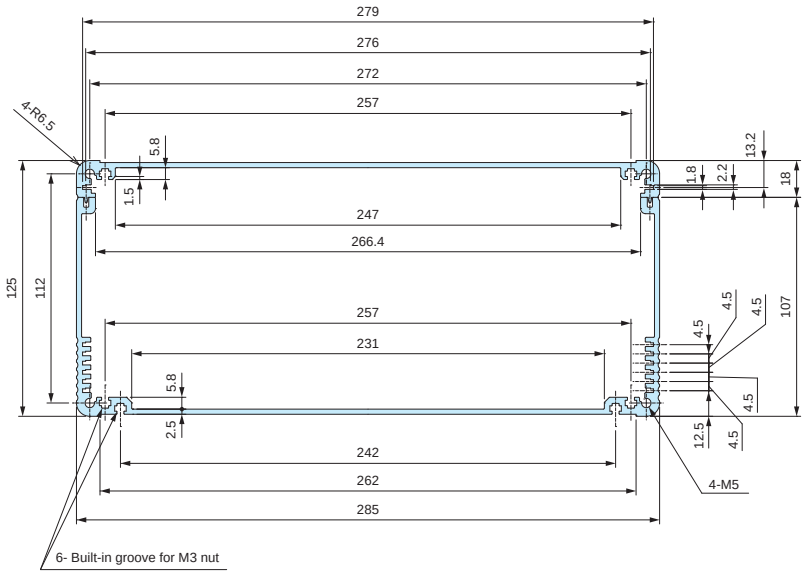

MT-3N SLIDING NUT for EX□ • EXH□

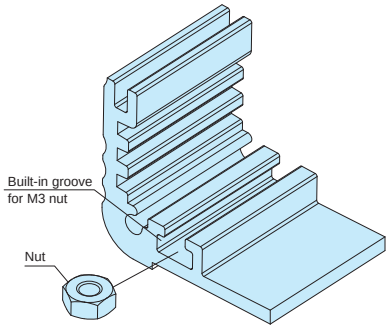

MT-3N dimensions

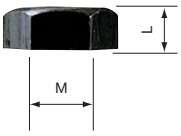

Product no. / Dimensions

Product no.	M	L	Material	Finish	Pack of
MT-3N	3	2.4	Steel	Black trivalent chromate	50

■ Sliding nut can be used on all EXPT • EXP • EXPE • EXW • EXPF • EXEF • EXWF • EX models with width 140mm or larger bottom covers, as well as with width 230mm and 285mm top covers, on all EXH • EXHE • EXHF • EXHFE models with width 140mm or larger bottom covers, as well as all heat-sink top covers.

EXEG series EMC SHIELDING FABRIC-OVER-FOAM GASKET

■ Exclusive EMC shielding fabric-over-foam gasket for EXPE • EXEF • EXHE • EXHFE models.

Suitable Models

Product no.	Suitable models
EXEG-2.5	EXPE7-□, 9-□, 12-□, 15-□, EXEF7-□, 9-□, 11-□, 15-□ EXHE8-□, 11-□, 14-□, EXHFE8-□, 11-□, 14-□
EXEG-3.2	EXPE20-□, 24-□, 30-□, EXEF20-□, 24-□ EXHE19-□, 23-□, 29-□, EXHFE19-□, 23-□, 29-□

Product no. / Dimensions

Product no.	Dimensions	Pack of
EXEG-2.5	Φ2.5×500mm	1
EXEG-3.2	Φ3.2×500mm	1

Length tolerance = +/- 10%

EMC Shielding Effects

■ Material / Color : Conductive fiber • TPE / Metallic gray

EX series APPLICATION EXAMPLE

Tube Amplifier

Product by MJ Audio Technology

IoT Relay Module

Product by Bunnyhop (Japan)

Premain Power Amplifier

Product by AY-densi (Japan)

USB Edge Node

Product by SHINWA (Japan)

TLW series TILT LEG

APPLICATION EXAMPLE

- Double shot injection molded feet with soft and well-designed rounded shape.
- Non-slip design with Elastomer (TPE) pad.
- Available in 3 different color patterns (2 color patterns for TLW-70 models).
- TLW-70E models are exclusively for use with width 185mm or larger bottom covers of EXP • EXPE • EXW • EX • EXH • EXHE aluminium enclosures.

Technical Data
Max load : 7kg

Components

No.	Part name	Pcs	Material	Color / Finish
1	Front foot	2	PC + ABS UL94V-0 • TPE	Black & Black • Navy & Gray • Light gray & Gray
2	Rear foot	2	PC + ABS UL94V-0 • TPE	Black & Black • Navy & Gray • Light gray & Gray
–	Screw	4	Steel M3-8 pan head	Black trivalent chromate
–	Nut	4	Steel M3	Black trivalent chromate

TLW dimensions

- DXF/DWG/PDF/STP drawings available on our website.

Mounting hole (Front)

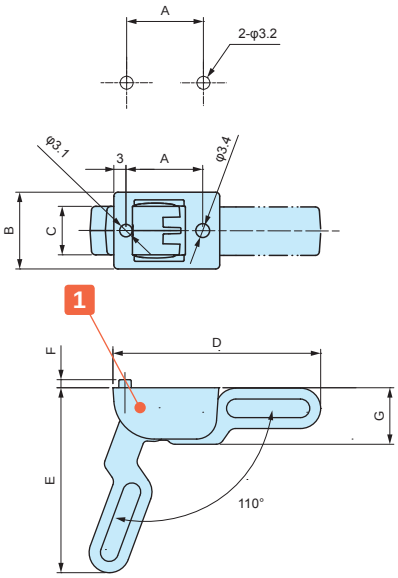

Mounting hole (Rear)

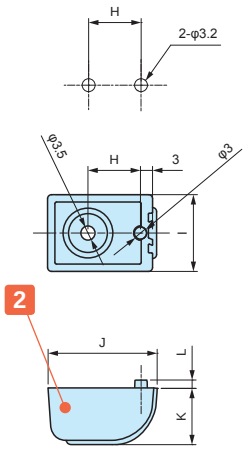

- TLW-70E□□ models are for installation (with M3 nut) into the built-in grooves on bottom-covers of EXP • EXPE 20-6, EXH • EXHE • EX 19-4 or larger models.
- Hole milling is required to install TLW-46□□ and TLW-70□□ models.
- Max installation panel thickness : t = 3.5mm

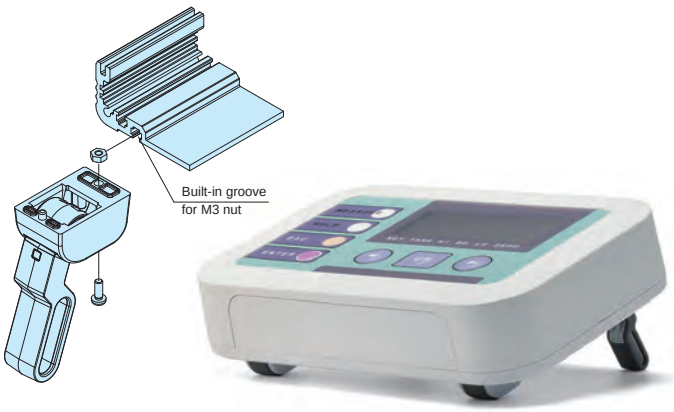

Product no. / Dimensions

Product no.	A	B	C	D	E	F	G	H	I	J	K	L	Color (plastic)	Color (TPE)	Weight (g)
TLW-46BB	19	19	12	51.2	45.9	2	14	13	19	27	14	2	Black	Black	23
TLW46-NG	19	19	12	51.2	45.9	2	14	13	19	27	14	2	Navy	Gray	23
TLW-46LG	19	19	12	51.2	45.9	2	14	13	19	27	14	2	Light gray	Gray	23
TLW-70EBB	–	25	16	75.4	69	3	21.5	–	25	39	21.5	3	Black	Black	59
TLW-70ENG	–	25	16	75.4	69	3	21.5	–	25	39	21.5	3	Navy	Gray	59
TLW-70ELG	–	25	16	75.4	69	3	21.5	–	25	39	21.5	3	Light gray	Gray	59
TLW-70BB	30	25	16	75.4	69	2	21.5	20	25	39	21.5	2	Black	Black	59
TLW-70LG	30	25	16	75.4	69	2	21.5	20	25	39	21.5	2	Light gray	Gray	59

AW • AWN • AWP series

IP68 ALUMINIUM ENCLOSURE

AW • AWN • AWP series are highly functional aluminium enclosures which are IP68 (24 hours / 1m depth immersion) rated with heat dissipating heat-sink fins.
34 sizes available. Standard, Flanged, Shielding, and Silicone protector types are available.
Suitable for LED power supply, industrial camera, controller or measuring instrument where waterproof and cooling performance are crucial.

APPLICATION EXAMPLE

Waterproof Boating Network Modular System

Product by Dockmate (Belgium)

GNSS Receiver

Product by KomNavRus

Heavy Duty Portable Hardness Tester

Product by DEMEQ (Argentina)

LoRa Wan Gateway

Product by ProEsys (Italy)

Radio-Control Electronic Exploder

Product by CODETEL (France)

Pin Hole Detector

Product by SANKO ECECTRONIC LABORATORY (Japan)

FBG Data Logger

Product by NAGANO KEIKI (Japan)

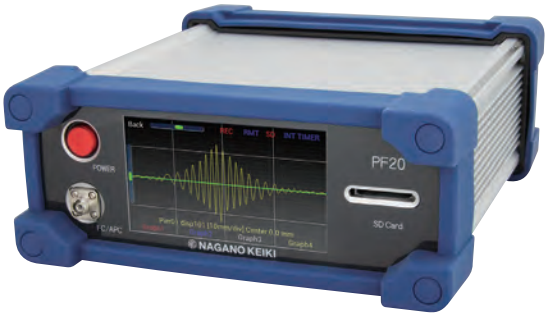

Data Logger with 3G Modem Report Function

Product by mSolution (Hong Kong)

Custom Length Available

Flexible frame length from 50mm to 700mm in 1mm intervals.

No minimum order quantity and short lead time for small quantity order.

See our website for further details.

AW series IP68 FLANGED ALUMINIUM ENCLOSURE

EMC Shielding Effects

IP68

- IP68 and heat dissipation enclosure. Designed with flanged end panels.
- PCB or chassis is mounted by sliding it horizontally into an inner-grooved body frame.
- Designed for a tough environment where waterproof and heat countermeasures are required.
- Suitable for outdoor use such as LED power supply and junction boxes.

Technical Data

Protection class: IP68 (24 hours/1m depth)
Operating temperature: -40°C ~ +105°C
Recommended torque: 1.0N • m

Normal N type Components

No.	Part name	Pcs	Material	Color / Finish
1	Flanged end panel	2	Diecast aluminium ADC12	Metallic gray • Black / Powder coated
2	Body frame	1	Extruded aluminium A6063S-T5	Silver • Black / Anodized with clear coating
3	Gasket	2	Silicone	Black
4	Screw	8	Stainless steel	Unfinished

EMC Shielded E type Components

No.	Part name	Pcs	Material	Color / Finish
1	Flanged end panel	2	Diecast aluminium ADC12	Silver • Black / Painted (Unfinished inside)
2	Body frame	1	Extruded aluminium A6063S-T5	Silver • Black / Anodized with clear coating
3	Gasket	2	Conductive silicone	Black
4	Screw	8	Stainless steel	Unfinished

Normal - N type

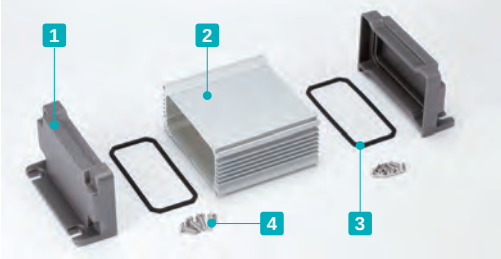

Color type

Metallic gray / Silver

N G S

Black / Silver

N B S

Black / Black

N B B

EMC Shielded - E type

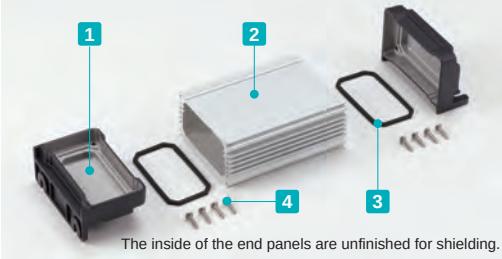

The inside of the end panels are unfinished for shielding.

Color type

Silver / Silver

E S S

Black / Silver

E B S

Black / Black

E B B

AW dimensions

■ DXF/DWG/PDF/STP drawings available on our website.

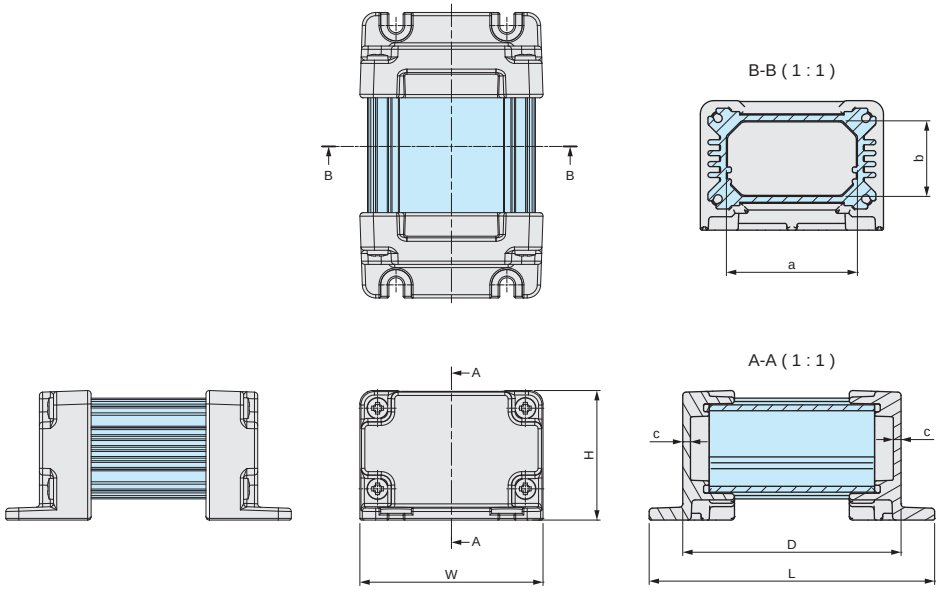

See page 235 and 236 for detailed body frame dimensions.

Product no. / Dimensions

■ Please suffix color code at the end of the product number.

Product no.	W	H	D	L	a	b	c	Weight (g)
AW 5-4- 7□□□	54.6	38.6	65	85	39	22.5	2.3	128.5
AW 5-4- 9□□□	54.6	38.6	85	105	39	22.5	2.3	149
AW 5-4-11□□□	54.6	38.6	110	130	39	22.5	2.3	175
AW 5-4-14□□□	54.6	38.6	135	155	39	22.5	2.3	201.5
AW 7-7- 8□□□	65.8	70.8	80	106	47	51	2.5	294.5
AW 7-7-11□□□	65.8	70.8	110	136	47	51	2.5	350
AW 7-7-15□□□	65.8	70.8	150	176	47	51	2.5	424.5
AW 7-7-20□□□	65.8	70.8	200	226	47	51	2.5	517
AW 7-7-25□□□	65.8	70.8	250	276	47	51	2.5	610
AW 8-5- 9□□□	80.8	50.8	90	116	62	31	2.5	289.5
AW 8-5-12□□□	80.8	50.8	115	141	62	31	2.5	330.5
AW 8-5-14□□□	80.8	50.8	140	166	62	31	2.5	372
AW 8-5-18□□□	80.8	50.8	175	201	62	31	2.5	429.5
AW 9-9-10□□□	86.3	92	100	129	66.5	66.5	3	560.5
AW 9-9-13□□□	86.3	92	125	154	66.5	66.5	3	633.5
AW 9-9-17□□□	86.3	92	170	199	66.5	66.5	3	764.5
AW 9-9-22□□□	86.3	92	220	249	66.5	66.5	3	910.5
AW 9-9-28□□□	86.3	92	275	304	66.5	66.5	3	1,071
AW11-6-11□□□	106.3	62	110	139	86.5	36.5	3	526.5
AW11-6-15□□□	106.3	62	150	179	86.5	36.5	3	625
AW11-6-19□□□	106.3	62	190	219	86.5	36.5	3	723.5
AW11-6-24□□□	106.3	62	240	269	86.5	36.5	3	847
AW12-8-11□□□	120	77	105	134	100.2	51.5	3	614.5
AW12-8-14□□□	120	77	140	169	100.2	51.5	3	720.5
AW12-8-17□□□	120	77	179.5	208.5	100.2	51.5	3	840
AW12-8-22□□□	120	77	215	244	100.2	51.5	3	947.5
AW16-9-14□□□	156.3	87	135	164	136.5	61.5	3	945.5
AW16-9-18□□□	156.3	87	175	204	136.5	61.5	3	1,092.5
AW16-9-23□□□	156.3	87	225	254	136.5	61.5	3	1,275.5
AW16-9-28□□□	156.3	87	275	304	136.5	61.5	3	1,459
AW21-9-17□□□	206.3	87	170	199	186.5	61.5	3	1,303
AW21-9-21□□□	206.3	87	210	239	186.5	61.5	3	1,473.5
AW21-9-26□□□	206.3	87	260	289	186.5	61.5	3	1,686.5
AW21-9-31□□□	206.3	87	310	339	186.5	61.5	3	1,899.5

■ Custom length is available.

Accessories (Optional parts)

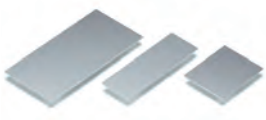

Mounting plate AWC series
See page 238

Hexagon socket head screw HCS series
See page 238

Cable gland
See page 333 ~ 340

Pole mounting bracket SSK series
See website

Protective vent PMF series
See page 325 ~ 326

AWN series IP68 HEAT-SINK ALUMINIUM ENCLOSURE

EMC Shielding Effects

IP68

- IP68 and heat dissipation enclosure design. Selectable in both Normal or EMC Shielded type.
- The extruded aluminium frame and diecast aluminium panels makes it extremely suitable to be used in harsh environments where waterproofing and heat dissipation is essential.
- PCB or chassis can be mounted by sliding it horizontally into inner-grooved body frame.
- Suitable for measuring instruments, industrial control box, and industrial camera housing, among others.

Technical Data

Protection class: IP68 (24 hours/1m depth)
Operating temperature: -40°C ~ +105°C
Recommended torque: 1.0N • m

Normal N type Components

No.	Part name	Pcs	Material	Color / Finish
1	End panel	2	Diecast aluminium ADC12	Metallic gray • Black / Powder coated
2	Body frame	1	Extruded aluminium A6063S-T5	Silver • Black / Anodized with clear coating
3	Gasket	2	Silicone	Black
4	Screw	8	Stainless steel	Unfinished
5	Rubber feet	4	Polyurethane	Black

EMC Shielded E type Components

No.	Part name	Pcs	Material	Color / Finish
1	End panel	2	Diecast aluminium ADC12	Silver • Black / Painted (Unfinished inside)
2	Body frame	1	Extruded aluminium A6063S-T5	Silver • Black / Anodized with clear coating
3	Gasket	2	Conductive silicone	Black
4	Screw	8	Stainless steel	Unfinished
5	Rubber feet	4	Polyurethane	Black

Normal - N type

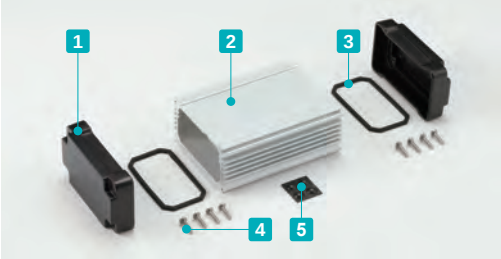

Color type

Metallic gray / Silver

N G S

Black / Silver

N B S

Black / Black

N B B

EMC Shielded - E type

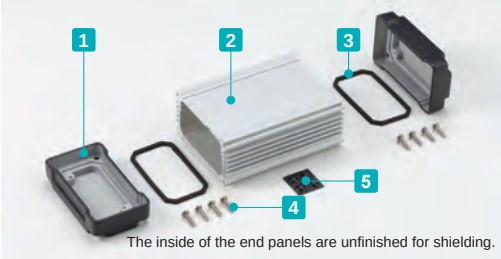

The inside of the end panels are unfinished for shielding.

Color type

Silver / Silver

E S S

Black / Silver

E B S

Black / Black

E B B

AWN dimensions

■ DXF/DWG/PDF/STP drawings available on our website.

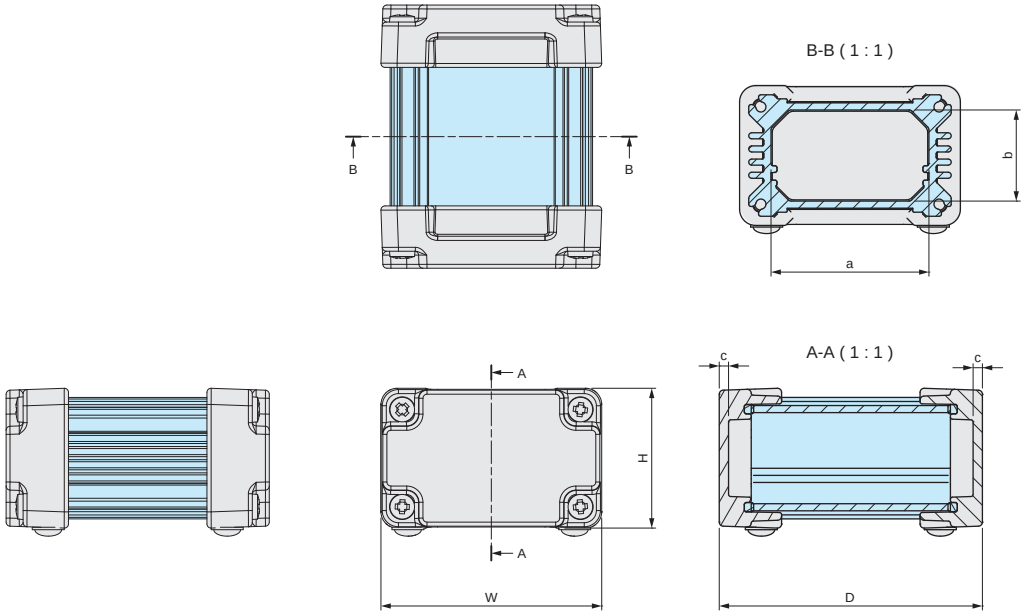

See page 235 and 236 for detailed body frame dimensions.

Product no. / Dimensions

■ Please suffix color code at the end of the product number.

Product no.	W	H	D	a	b	c	Weight (g)
AWN 5-4- 7□□□	54.6	34.6	65	39	22.5	2.3	118.5
AWN 5-4- 9□□□	54.6	34.6	85	39	22.5	2.3	139
AWN 5-4-11□□□	54.6	34.6	110	39	22.5	2.3	165
AWN 5-4-14□□□	54.6	34.6	135	39	22.5	2.3	191.5
AWN 7-7- 8□□□	65.8	65.8	80	47	51	2.5	272.5
AWN 7-7-11□□□	65.8	65.8	110	47	51	2.5	328
AWN 7-7-15□□□	65.8	65.8	150	47	51	2.5	402.5
AWN 7-7-20□□□	65.8	65.8	200	47	51	2.5	495
AWN 7-7-25□□□	65.8	65.8	250	47	51	2.5	588
AWN 8-5- 9□□□	80.8	45.8	90	62	31	2.5	259.5
AWN 8-5-12□□□	80.8	45.8	115	62	31	2.5	300.5
AWN 8-5-14□□□	80.8	45.8	140	62	31	2.5	342
AWN 8-5-18□□□	80.8	45.8	175	62	31	2.5	399.5
AWN 9-9-10□□□	86.3	86.3	100	66.5	66.5	3	521.5
AWN 9-9-13□□□	86.3	86.3	125	66.5	66.5	3	594.5
AWN 9-9-17□□□	86.3	86.3	170	66.5	66.5	3	725.5
AWN 9-9-22□□□	86.3	86.3	220	66.5	66.5	3	871.5
AWN 9-9-28□□□	86.3	86.3	275	66.5	66.5	3	1,032
AWN11-6-11□□□	106.3	56.3	110	86.5	36.5	3	479.5
AWN11-6-15□□□	106.3	56.3	150	86.5	36.5	3	578
AWN11-6-19□□□	106.3	56.3	190	86.5	36.5	3	676.5
AWN11-6-24□□□	106.3	56.3	240	86.5	36.5	3	800
AWN12-8-11□□□	120	71.3	105	100.2	51.5	3	590.5
AWN12-8-14□□□	120	71.3	140	100.2	51.5	3	696.5
AWN12-8-17□□□	120	71.3	179.5	100.2	51.5	3	816
AWN12-8-22□□□	120	71.3	215	100.2	51.5	3	923.5
AWN16-9-14□□□	156.3	81.3	135	136.5	61.5	3	871.5
AWN16-9-18□□□	156.3	81.3	175	136.5	61.5	3	1,018.5
AWN16-9-23□□□	156.3	81.3	225	136.5	61.5	3	1,201.5
AWN16-9-28□□□	156.3	81.3	275	136.5	61.5	3	1,385
AWN21-9-17□□□	206.3	81.3	170	186.5	61.5	3	1,261
AWN21-9-21□□□	206.3	81.3	210	186.5	61.5	3	1,431.5
AWN21-9-26□□□	206.3	81.3	260	186.5	61.5	3	1,644.5
AWN21-9-31□□□	206.3	81.3	310	186.5	61.5	3	1,857.5

■ Custom length is available.

Accessories (Optional parts)

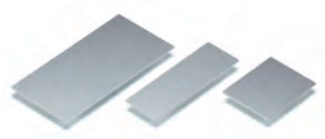

Mounting plate AWC series
See page 238

Hexagon socket head screw HCS series
See page 238

Cable gland
See page 333 ~ 340

Silicone protector AWSP series
See page 237

AWP series IP68 ALUMINIUM ENCLOSURE with SILICONE PROTECTOR

EMC Shielding Effects

IP68

Technical Data
Protection class: IP68 (24 hours/1m depth) Operating temperature: -40°C ~ +105°C Recommended torque: 1.0N • m

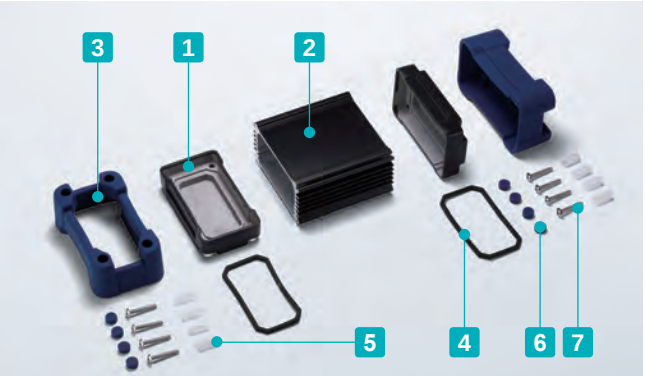

The inside of the end panels are unpainted for shielding.

- Strong impact resistant enclosure with tough silicone boot protectors.
- Specifically designed with heat dissipation effect, EMC shielding and IP68 rating.
- PCB or chassis can be horizontally mounted by sliding into an inner-grooved body frame.
- Available in 25 sizes and 6 different color combinations. Selectable from a total of 150 different combinations.
- Suitable for measuring instruments, industrial control box, industrial camera housing, etc.

Components

No.	Part name	Pcs	Material	Color / Finish
1	End panel	2	Diecast aluminium ADC12	Silver • Black / Painted (Unfinished inside)
2	Body frame	1	Extruded aluminium A6063S-T5	Silver • Black / Anodized with clear coating
3	Protector	2	Silicone	Black • Gray • Navy
4	Conductive gasket	2	Conductive silicone	Black
5	Spacer	8	Resin	White
6	Blind cap	8	Silicone	Black • Gray • Navy
7	Screw	8	Stainless steel	Unfinished

- AWP series utilizes AWN series E type enclosures.
  If N type is required, kindly purchase the enclosure and silicone protector separately.

Color Type

Code	S B Silver / Black	S G Silver / Gray	S N Silver / Navy
Color		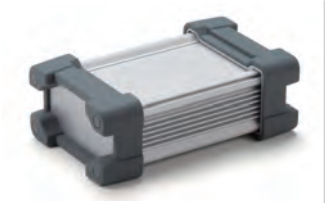	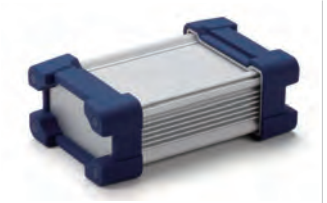
Code	**B B Black / Black**	**B G Black / Gray**	**B N Black / Navy**
Color		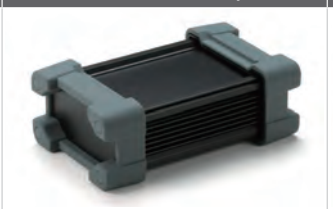	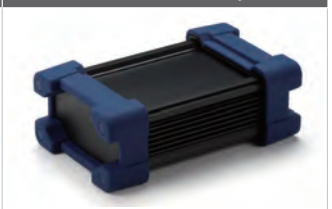

Ordering Number

For example, in case of ordering AWP8-5-9 size, Black enclosure and Navy silicone protector.

Product no. : AWP8-5-9

B **N**

Put a color code SB, SG, SN, BB, BG or BN.

※ Thermal resistance test condition
- Ambient air cooling
- Heat-sink fins are set perpendicular to the ground with temperature at 60°C.
- Anodized aluminium extrusion
- Heat source is applied on the opposite side (inner side) of the fins.

Product no. / Dimensions

See page 235 and 236 for detailed body frame dimensions.

Product no.	W	H	D	※Thermal resistance rate (°C/W)	Weight (g)
AWP 8-5- 9□□	87.4(80.8)	53.6(45.8)	114 (90)	5.97	353.5
AWP 8-5-12□□	87.4(80.8)	53.6(45.8)	139(115)	5.01	394.5
AWP 8-5-14□□	87.4(80.8)	53.6(45.8)	164(140)	4.37	436
AWP 8-5-18□□	87.4(80.8)	53.6(45.8)	199(175)	3.76	493.5
AWP 9-9-10□□	93.9(86.3)	95.1(86.3)	130(100)	3.1	693
AWP 9-9-13□□	93.9(86.3)	95.1(86.3)	155(125)	2.63	766
AWP 9-9-17□□	93.9(86.3)	95.1(86.3)	200(170)	2.12	897
AWP 9-9-22□□	93.9(86.3)	95.1(86.3)	250(220)	1.79	1,043
AWP 9-9-28□□	93.9(86.3)	95.1(86.3)	305(275)	1.54	1,203.5
AWP11-6-11□□	113.9(106.3)	65.1(56.3)	140(110)	4.52	652.5
AWP11-6-15□□	113.9(106.3)	65.1(56.3)	180(150)	3.62	751.5
AWP11-6-19□□	113.9(106.3)	65.1(56.3)	220(190)	3.08	850
AWP11-6-24□□	113.9(106.3)	65.1(56.3)	270(240)	2.64	973
AWP12-8-11□□	127.6(120)	80.1(71.3)	135(105)	3.6	778.5
AWP12-8-14□□	127.6(120)	80.1(71.3)	170(140)	2.93	885
AWP12-8-17□□	127.6(120)	80.1(71.3)	209.5(179.5)	2.47	1,004.5
AWP12-8-22□□	127.6(120)	80.1(71.3)	245(215)	2.18	1,112
AWP16-9-14□□	163.9(156.3)	90.1(81.3)	165(135)	2.64	1,094
AWP16-9-18□□	163.9(156.3)	90.1(81.3)	205(175)	2.2	1,240.5
AWP16-9-23□□	163.9(156.3)	90.1(81.3)	255(225)	1.86	1,424
AWP16-9-28□□	163.9(156.3)	90.1(81.3)	305(275)	1.63	1,607.5
AWP21-9-17□□	213.9(206.3)	90.1(81.3)	202(170)	2.3	1,571.5
AWP21-9-21□□	213.9(206.3)	90.1(81.3)	242(210)	1.99	1,742
AWP21-9-26□□	213.9(206.3)	90.1(81.3)	292(260)	1.72	1,955.5
AWP21-9-31□□	213.9(206.3)	90.1(81.3)	342(310)	1.54	2,168.5

■ Custom length is available.

■ ( ) value = enclosure dimension.

AWP dimensions

■ DXF/DWG/PDF/STP drawings available on our website.

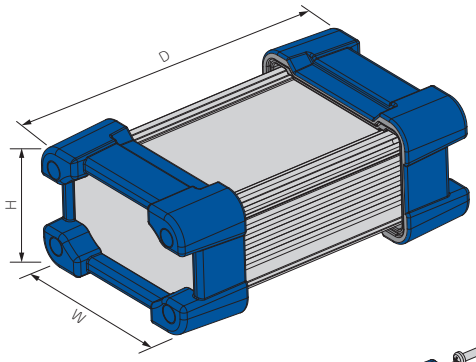

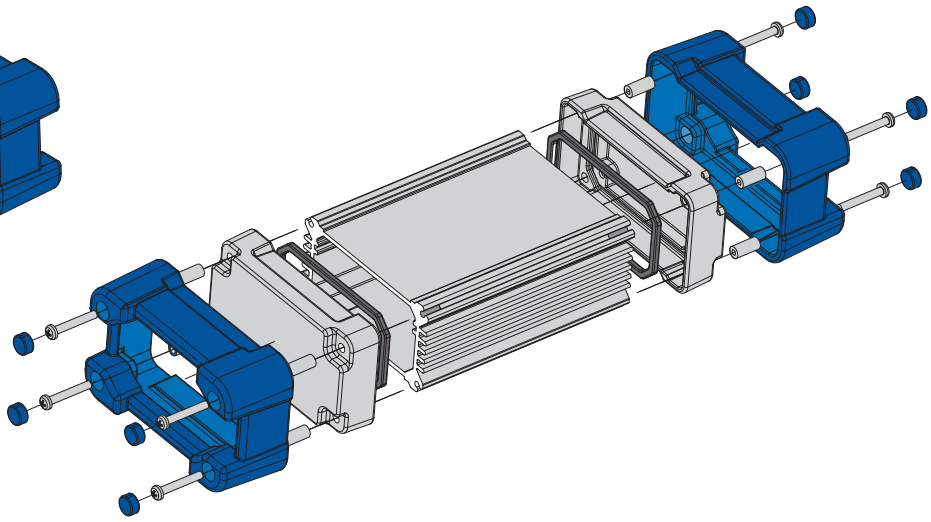

AWA series HEAT-SINK ALUMINIUM ENCLOSURE

AWA series is an aluminium enclosure that has a frame with heat-sink fins on both sides. Furthermore, the enclosure is also conductive, which provides a shielding effect. By machining the panels, the unit becomes extremely suitable to be used as high-end audio, or as an industrial equipment.

APPLICATION EXAMPLE

Industrial IoT Interface Device

Product by SEE Système Radio (France)

Industrial Fanless PC

Audio Amplifier

Wide-Band Solid State Optical Amplifier

Product by Spectra Quest Lab. (Japan)

Customization

CNC milling available for customization on AWA series.
See website for more details.

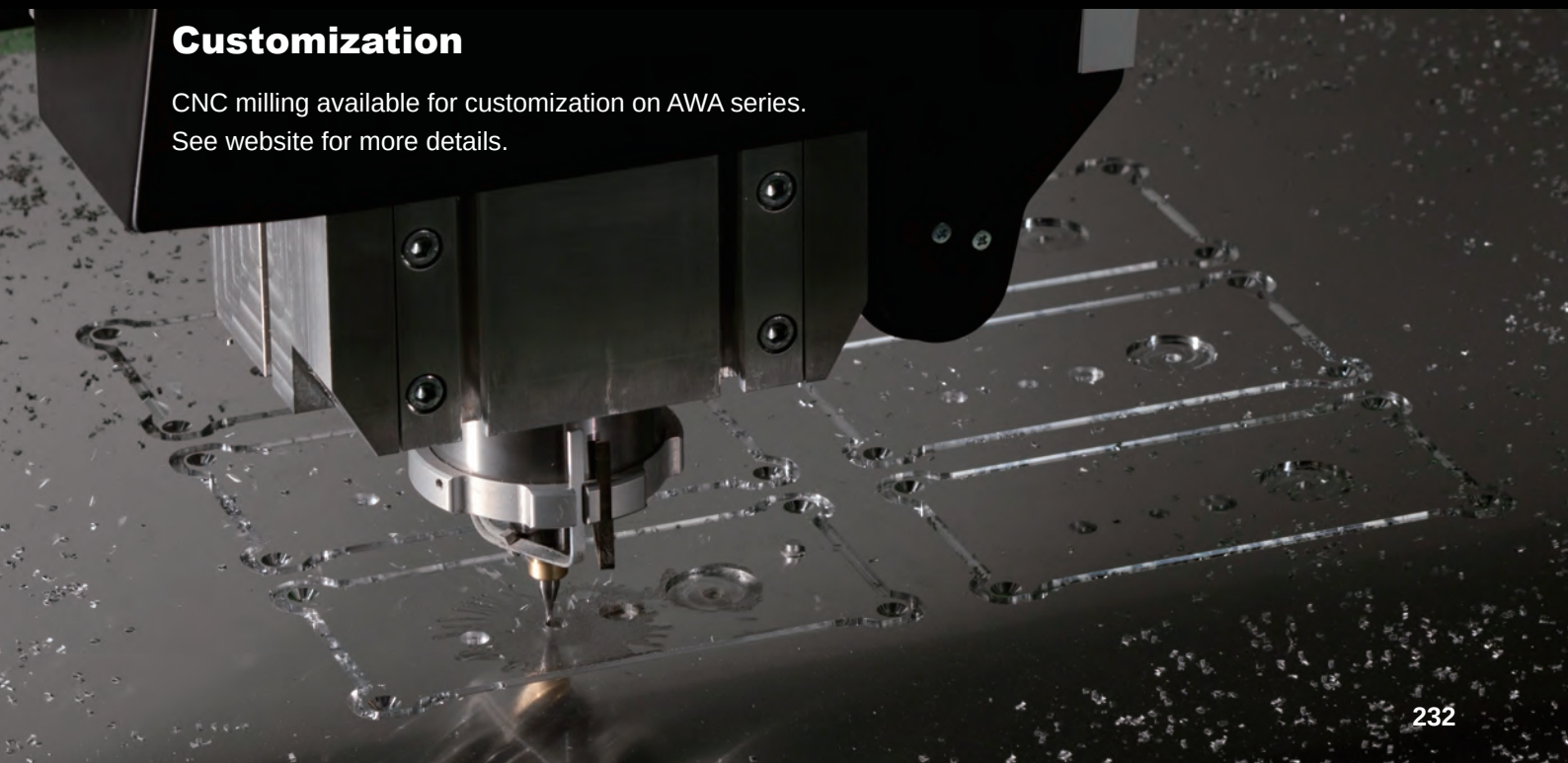

AWA series HEAT-SINK ALUMINIUM ENCLOSURE

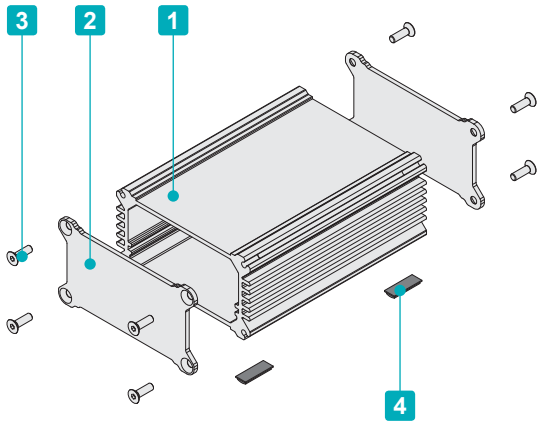

- Extruded aluminium frame manufactured with heat-sink sides.
- Silver anodized end panels makes for a luxurious finish.
- Conductivity is achieved by utilizing the contact between the unfinished end panels side, and the unfinished ends of the frame.
- PCB or chassis can be horizontally mounted by sliding into an inner-grooved body frame.
- Suitable for industrial fanless PC, measuring instrument, digital audio amplifier and so on.
- Custom length is available.

Included screws :
AWA5-3, 6-6, 8-4 models : Hex flat head M3-8 x 8 pcs
AWA8-8, 10-5, 12-7, 15-8 models : Hex flat head M4-10 x 8 pcs
AWA20-8 models : Hex flat head M5-10 x 8 pcs
※Hexagonal wrench included.

Component

No.	Part name	Pcs	Material	Color / Finish
1	Body frame	1	Extruded aluminium A6063S-T5	Silver / Anodized with clear coating
2	End panel	2	Aluminium A1050P	Silver / Anodized (Unfinished inside)
3	Hex socket screw	8	Stainless steel	Unfinished
4	Rubber feet	4	Polyurethane	Black

Accessories (Optional parts)

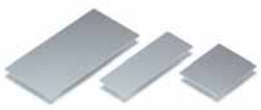

Mounting plate AWC series
See page 238

Aluminium isolation feet AFS • AFM series
See page 293 ~ 294

AWA dimensions

■ DXF/DWG/PDF/STP drawings available on our website.

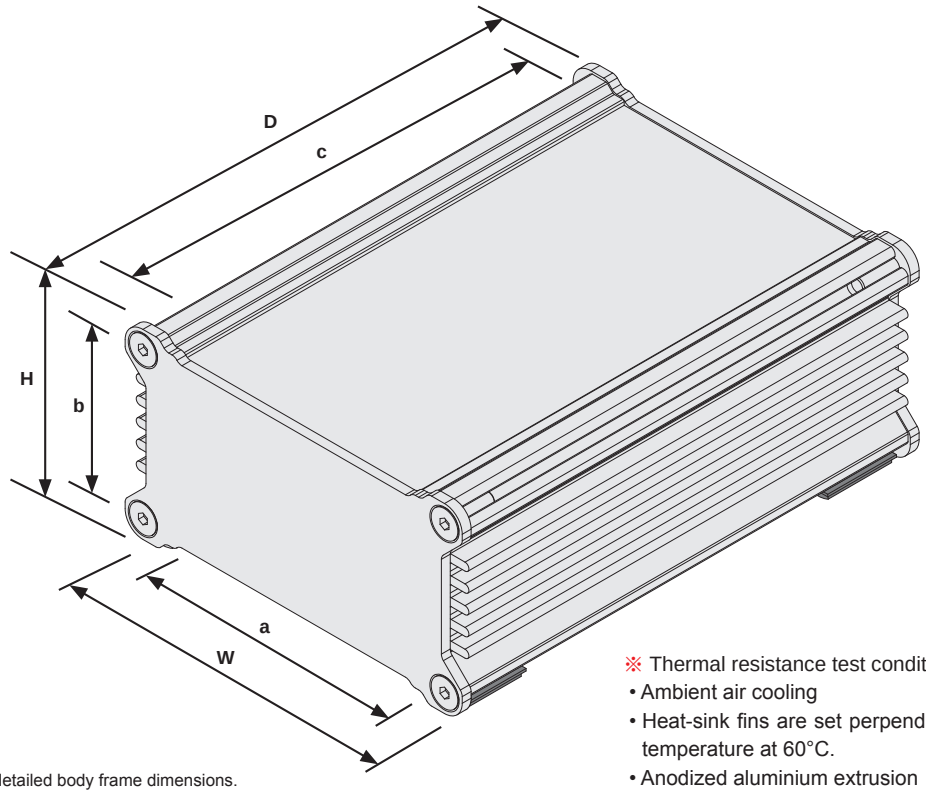

See page 235 and 236 for detailed body frame dimensions.

※ Thermal resistance test condition
- Ambient air cooling
- Heat-sink fins are set perpendicular to the ground with temperature at 60°C.
- Anodized aluminium extrusion
- Heat source is applied on the opposite side (inner side) of the fins.

Product no. / Dimensions

Product no.	External dimensions			Internal dimensions			※Thermal resistance rate (°C/W)	Weight (g)
	W	H	D	a	b	c		
AWA 5-3- 5SS	52	32	53.2	39	22.5	49.2	11.2	69.5
AWA 5-3- 7SS	52	32	73.2	39	22.5	69.2	9.18	90.5
AWA 5-3-10SS	52	32	98.2	39	22.5	94.2	7.64	116.5
AWA 5-3-12SS	52	32	123.2	39	22.5	119.2	6.63	142.5
AWA 6-6- 7SS	61	61	68	47	51	64	4.41	156
AWA 6-6-10SS	61	61	98	47	51	94	3.5	212
AWA 6-6-14SS	61	61	138	47	51	134	2.83	286
AWA 6-6-19SS	61	61	188	47	51	184	2.33	379
AWA 6-6-24SS	61	61	238	47	51	234	2.02	471.5
AWA 8-4- 8SS	76	41	78	62	31	74	5.97	154
AWA 8-4-10SS	76	41	103	62	31	99	5.01	195
AWA 8-4-13SS	76	41	128	62	31	124	4.37	236.5
AWA 8-4-16SS	76	41	163	62	31	159	3.76	294
AWA 8-8- 9SS	82	82	86	66.5	66.5	81	3.1	319.5
AWA 8-8-11SS	82	82	111	66.5	66.5	106	2.63	392.5
AWA 8-8-16SS	82	82	156	66.5	66.5	151	2.12	523.5
AWA 8-8-21SS	82	82	206	66.5	66.5	201	1.79	669.5
AWA 8-8-26SS	82	82	261	66.5	66.5	256	1.54	829.5
AWA10-5-10SS	102	52	95.6	86.5	36.5	90.6	4.52	288.5
AWA10-5-14SS	102	52	135.6	86.5	36.5	130.6	3.62	387.5
AWA10-5-18SS	102	52	175.6	86.5	36.5	170.6	3.08	486
AWA10-5-23SS	102	52	225.6	86.5	36.5	220.6	2.64	609
AWA12-7- 9SS	115.7	67	90.6	100.2	51.5	85.6	3.6	354
AWA12-7-12SS	115.7	67	125.6	100.2	51.5	120.6	2.93	460
AWA12-7-17SS	115.7	67	165.1	100.2	51.5	160.1	2.47	579.5
AWA12-7-20SS	115.7	67	200.6	100.2	51.5	195.6	2.18	687
AWA15-8-12SS	152	77	120.6	136.5	61.5	115.6	2.64	565.5
AWA15-8-16SS	152	77	160.6	136.5	61.5	155.6	2.2	712
AWA15-8-21SS	152	77	210.6	136.5	61.5	205.6	1.86	895.5
AWA15-8-26SS	152	77	260.6	136.5	61.5	255.6	1.63	1,079
AWA20-8-15SS	202.4	77.4	153.8	186.5	61.5	147.8	2.3	854.5
AWA20-8-19SS	202.4	77.4	193.8	186.5	61.5	187.8	1.99	1,025
AWA20-8-24SS	202.4	77.4	243.8	186.5	61.5	237.8	1.72	1,238
AWA20-8-29SS	202.4	77.4	293.8	186.5	61.5	287.8	1.54	1,451.5

Cross-section view of frame

■ DXF/DWG/PDF/STP drawings available on our website.

AW • AWN5-4-□
AWA5-3-□

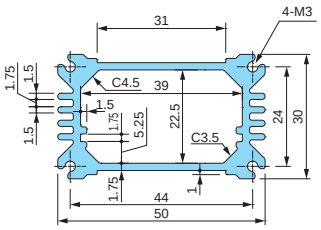

AW • AWN • AWP7-7-□
AWA6-6-□

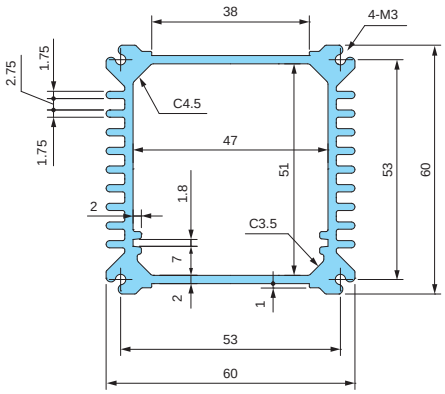

AW • AWN • AWP8-5-□
AWA8-4-□

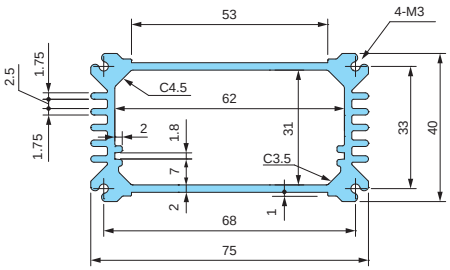

AW • AWN • AWP9-9-□
AWA8-8-□

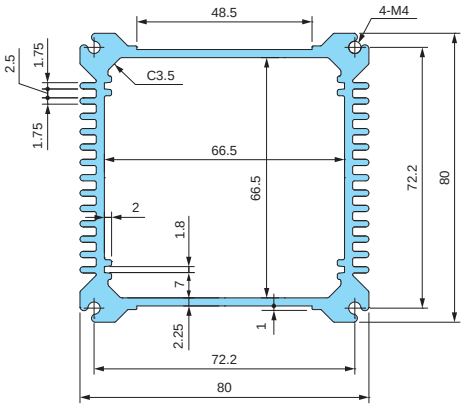

AW • AWN • AWP11-6-□
AWA10-5-□

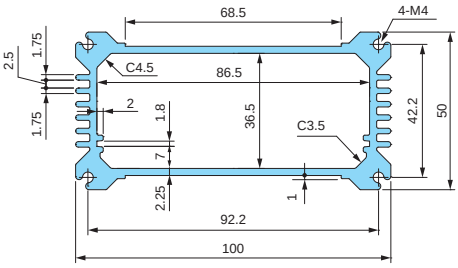

AW • AWN • AWP12-8-□
AWA12-7-□

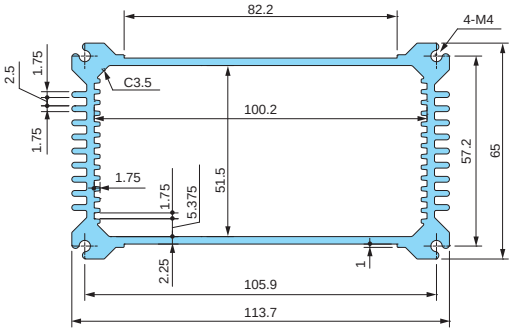

AW • AWN • AWP16-9-□
AWA15-8-□

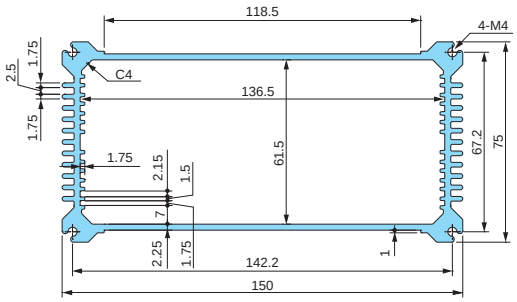

AW • AWN • AWP21-9-□
AWA20-8-□

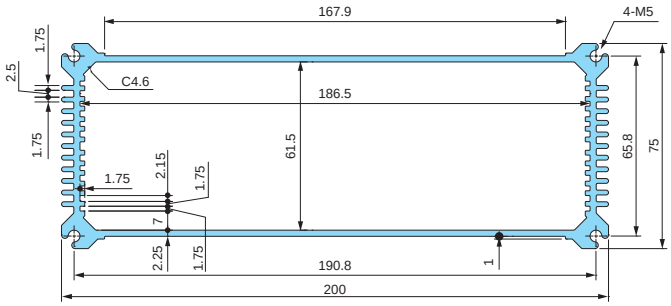

※ Thermal resistance test condition
- Ambient air cooling
- Heat-sink fins are set perpendicular to the ground with temperature at 60°C.
- Anodized aluminium extrusion
- Heat source is applied on the opposite side (inner side) of the fins.

Product no.				Frame length	※Thermal resistance rate (°C/W)
AW 5-4- 7	AWN 5-4- 7	–	AWA 5-3- 5	49.2	11.2
AW 5-4- 9	AWN 5-4- 9	–	AWA 5-3- 7	69.2	9.18
AW 5-4-11	AWN 5-4-11	–	AWA 5-3-10	94.2	7.64
AW 5-4-14	AWN 5-4-14	–	AWA 5-3-12	119.2	6.63
AW 7-7- 8	AWN 7-7- 8	–	AWA 6-6- 7	64	4.41
AW 7-7-11	AWN 7-7-11	–	AWA 6-6-10	94	3.5
AW 7-7-15	AWN 7-7-15	–	AWA 6-6-14	134	2.83
AW 7-7-20	AWN 7-7-20	–	AWA 6-6-19	184	2.33
AW 7-7-25	AWN 7-7-25	–	AWA 6-6-24	234	2.02
AW 8-5- 9	AWN 8-5- 9	AWP 8-5- 9	AWA 8-4- 8	74	5.97
AW 8-5-12	AWN 8-5-12	AWP 8-5-12	AWA 8-4-10	99	5.01
AW 8-5-14	AWN 8-5-14	AWP 8-5-14	AWA 8-4-13	124	4.37
AW 8-5-18	AWN 8-5-18	AWP 8-5-18	AWA 8-4-16	159	3.76
AW 9-9-10	AWN 9-9-10	AWP 9-9-10	AWA 8-8- 9	81	3.1
AW 9-9-13	AWN 9-9-13	AWP 9-9-13	AWA 8-8-11	106	2.63
AW 9-9-17	AWN 9-9-17	AWP 9-9-17	AWA 8-8-16	151	2.12
AW 9-9-22	AWN 9-9-22	AWP 9-9-22	AWA 8-8-21	201	1.79
AW 9-9-28	AWN 9-9-28	AWP 9-9-28	AWA 8-8-26	256	1.54
AW11-6-11	AWN11-6-11	AWP11-6-11	AWA10-5-10	90.6	4.52
AW11-6-15	AWN11-6-15	AWP11-6-15	AWA10-5-14	130.6	3.62
AW11-6-19	AWN11-6-19	AWP11-6-19	AWA10-5-18	170.6	3.08
AW11-6-24	AWN11-6-24	AWP11-6-24	AWA10-5-23	220.6	2.64
AW12-8-11	AWN12-8-11	AWP12-8-11	AWA12-7-9	85.6	3.6
AW12-8-14	AWN12-8-14	AWP12-8-14	AWA12-7-12	120.6	2.93
AW12-8-17	AWN12-8-17	AWP12-8-17	AWA12-7-17	160.1	2.47
AW12-8-22	AWN12-8-22	AWP12-8-22	AWA12-7-20	195.6	2.18
AW16-9-14	AWN16-9-14	AWP16-9-14	AWA15-8-12	115.6	2.64
AW16-9-18	AWN16-9-18	AWP16-9-18	AWA15-8-16	155.6	2.2
AW16-9-23	AWN16-9-23	AWP16-9-23	AWA15-8-21	205.6	1.86
AW16-9-28	AWN16-9-28	AWP16-9-28	AWA15-8-26	255.6	1.63
AW21-9-17	AWN21-9-17	AWP21-9-17	AWA20-8-15	147.8	2.3
AW21-9-21	AWN21-9-21	AWP21-9-21	AWA20-8-19	187.8	1.99
AW21-9-26	AWN21-9-26	AWP21-9-26	AWA20-8-24	237.8	1.72
AW21-9-31	AWN21-9-31	AWP21-9-31	AWA20-8-29	287.8	1.54

AWSP series SILICONE PROTECTOR for AWN

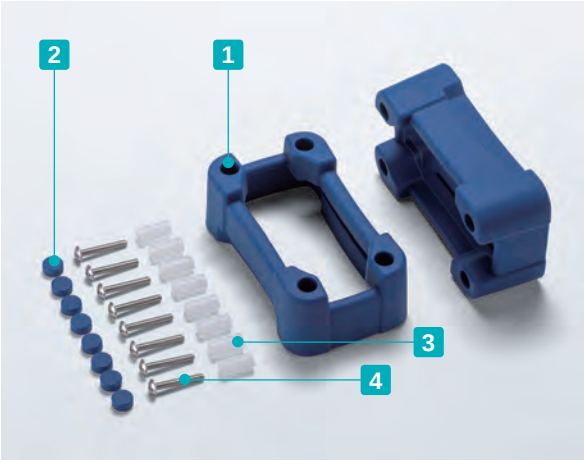

Color Type

Code	B Black	G Gray	N Navy
Color			

- Silicone protector for AWN series.
- Protect switches and/or connectors on end panels from impact when dropped, etc. Custom color is available from just 1 set. For 250 sets or more, manufacture costs will be similar to a standard color. Please inquire for more details. For custom color order, please specify **PANTONE**® color code.

AWSP dimensions

- DXF/DWG/PDF drawings available on our website.

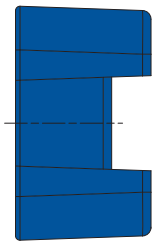

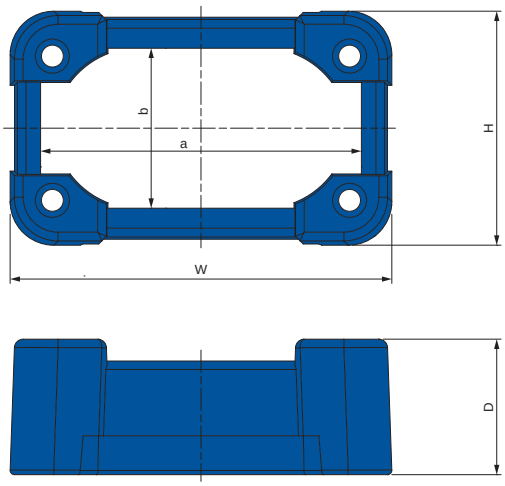

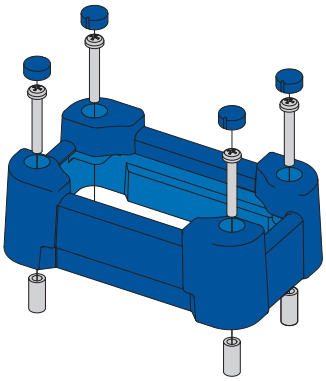

Components

No.	Part name	Pcs	Material	Color / Finish
1	Protector	2	Silicone	Black • Gray • Navy
2	Blind cap	8	Silicone	Black • Gray • Navy
3	Spacer	8	POM	White
4	Screw	8	Stainless steel	Unfinished

Product no. / Dimensions

- Please suffix color code at the end of the product number.

Product no.	W	H	D	a	b	Screw size	Suitable models	Weight (g)
AWSP 8-5□	87.4	53.6	31	73.4	36.6	M3	AWN 8-5-□	100.5
AWSP 9-9□	93.9	95.1	35.5	76.9	75.1	M4	AWN 9-9-□	184.5
AWSP11-6□	113.9	65.1	35.5	96.9	45.1	M4	AWN11-6-□	186
AWSP12-8□	127.6	80.1	35.5	110.6	60.1	M4	AWN12-8-□	201
AWSP16-9□	163.9	90.1	35.5	145.9	69.1	M4	AWN16-9-□	235
AWSP21-9□	213.9	90.1	39.5	192.9	66.1	M5	AWN21-9-□	333

AWC series ALUMINIUM MOUNTING PLATE for AW • AWN • AWP • AWA

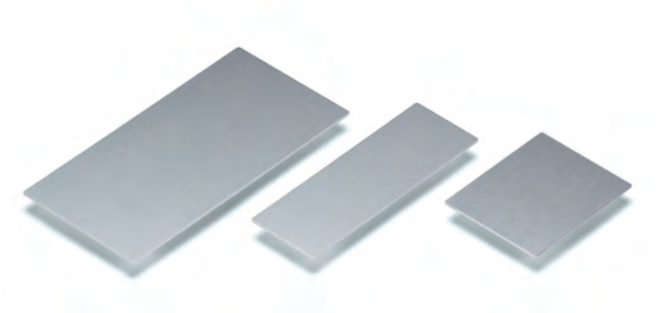

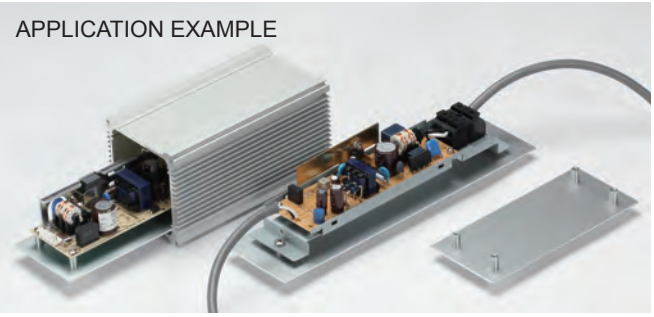

- Material: Aluminium A1050P t=1.5 / Silver anodized
- Mounting plate for AW, AWN, AWP, and AWA enclosures.
- Utilize for mounting PCB, power supply, terminal blocks, etc.

Product no. / Dimensions

Product no.	W	D	Suitable models
AWC 5- 7	38.9	49.2	AW • AWN 5-4- 7 • AWA 5-3- 5
AWC 5- 9	38.9	69.2	AW • AWN 5-4- 9 • AWA 5-3- 7
AWC 5-11	38.9	94.2	AW • AWN 5-4-11 • AWA 5-3-10
AWC 5-14	38.9	119.2	AW • AWN 5-4-14 • AWA 5-3-12
AWC 7- 8	47	64	AW • AWN • AWP 7-7- 8 • AWA 6-6- 7
AWC 7-11	47	94	AW • AWN • AWP 7-7-11 • AWA 6-6-10
AWC 7-15	47	134	AW • AWN • AWP 7-7-15 • AWA 6-6-14
AWC 7-20	47	184	AW • AWN • AWP 7-7-20 • AWA 6-6-19
AWC 7-25	47	234	AW • AWN • AWP 7-7-25 • AWA 6-6-24
AWC 8- 9	61.8	74	AW • AWN • AWP 8-5- 9 • AWA 8-4- 8
AWC 8-12	61.8	99	AW • AWN • AWP 8-5-12 • AWA 8-4-10
AWC 8-14	61.8	124	AW • AWN • AWP 8-5-14 • AWA 8-4-13
AWC 8-18	61.8	159	AW • AWN • AWP 8-5-18 • AWA 8-4-16
AWC 9-10	66.5	81	AW • AWN • AWP 9-9-10 • AWA 8-8- 9
AWC 9-13	66.5	106	AW • AWN • AWP 9-9-13 • AWA 8-8-11
AWC 9-17	66.5	151	AW • AWN • AWP 9-9-17 • AWA 8-8-16
AWC 9-22	66.5	201	AW • AWN • AWP 9-9-22 • AWA 8-8-21
AWC 9-28	66.5	256	AW • AWN • AWP 9-9-28 • AWA 8-8-26
AWC11-11	86.5	90.6	AW • AWN • AWP11-6-11 • AWA10-5-10
AWC11-15	86.5	130.6	AW • AWN • AWP11-6-15 • AWA10-5-14
AWC11-19	86.5	170.6	AW • AWN • AWP11-6-19 • AWA10-5-18
AWC11-24	86.5	220.6	AW • AWN • AWP11-6-24 • AWA10-5-23
AWC12-11	100.2	85.6	AW • AWN • AWP12-8-11 • AWA12-7- 9
AWC12-14	100.2	120.6	AW • AWN • AWP12-8-14 • AWA12-7-12
AWC12-17	100.2	160.1	AW • AWN • AWP12-8-17 • AWA12-7-17
AWC12-22	100.2	195.6	AW • AWN • AWP12-8-22 • AWA12-7-20
AWC16-14	136.3	115.6	AW • AWN • AWP16-9-14 • AWA15-8-12
AWC16-18	136.3	155.6	AW • AWN • AWP16-9-18 • AWA15-8-16
AWC16-23	136.3	205.6	AW • AWN • AWP16-9-23 • AWA15-8-21
AWC16-28	136.3	255.6	AW • AWN • AWP16-9-28 • AWA15-8-26
AWC21-17	186.1	147.8	AW • AWN • AWP21-9-17 • AWA20-8-15
AWC21-21	186.1	187.8	AW • AWN • AWP21-9-21 • AWA20-8-19
AWC21-26	186.1	237.8	AW • AWN • AWP21-9-26 • AWA20-8-24
AWC21-31	186.1	287.8	AW • AWN • AWP21-9-31 • AWA20-8-29

AWC dimensions

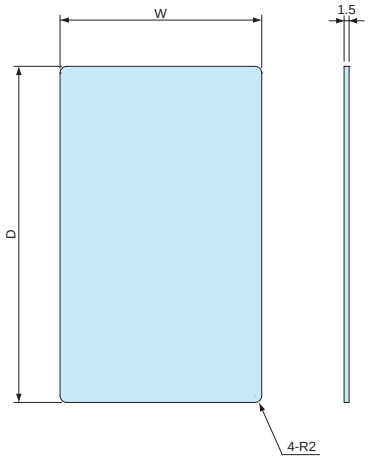

- DXF/DWG/PDF drawings available on our website.

HCS series HEXAGON SOCKET HEAD SCREW for AW • AWN

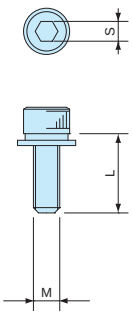

- Hexagon socket head screws for fastening the end panels of AW and AWN enclosures.
- Utilize for tamper-resistance functionality or for an elegant sleek look.

Product no. / Dimensions

Product no.	M	L	S	Material	Pack of
HCS3-12S	3	12	2.5	Stainless steel	8
HCS4-12S	4	12	3	Stainless steel	8
HCS5-12S	5	12	4	Stainless steel	8

EXH • EXHE • EXHF • EXHFE series

HEAT-SINK ALUMINIUM ENCLOSURE

EXH • EXHE • EXHF • EXHFE series are aluminium enclosures with a highly efficient heat-sink top cover. Suitable to be used as fanless PC, power amplifier, and power supply box where heat dissipation is required.
Wide range, 64 different sizes available with EMC shielded and flanged models.

Waved surface heat-sink fins for maximum cooling performance!

- Each heat-sink fin has a waved surface construction for maximum cooling performance.

Waved Surface

HEAT DISSIPATION EXAMPLE

- EXH series has grooves to put M3 nuts inside its heat-sink cover.
  It is possible to construct a heat conduction route from your heat source to heat-sink cover easily for better heat dissipation performance.

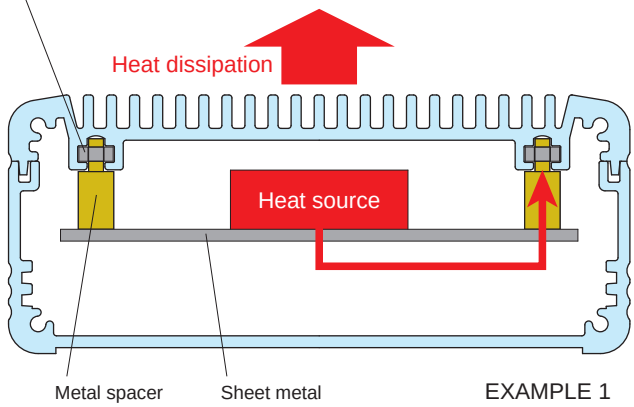

EXAMPLE 1

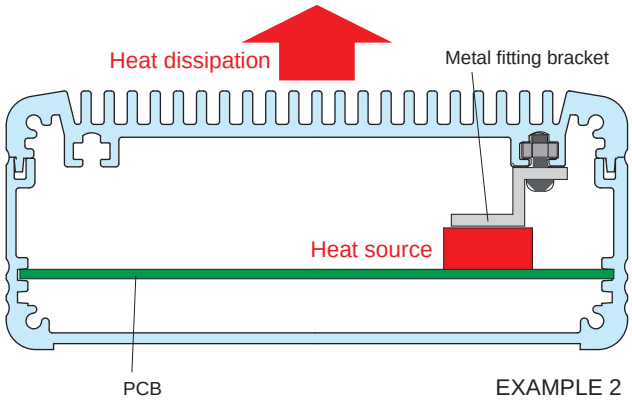

EXAMPLE 2

CUSTOMIZATION EXAMPLE

CNC Machining on Heat-sink Cover

Heat-sink plates can be customized with our high speed CNC machines.

Pin Shaped Fin Customization

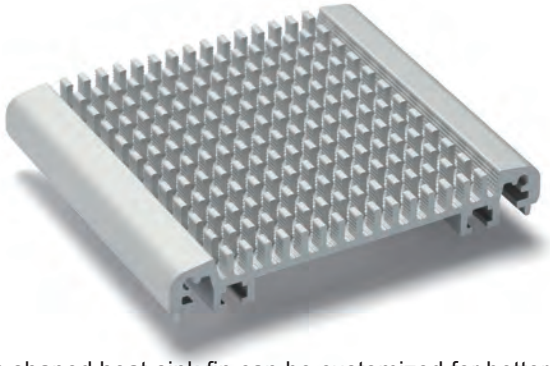

Pin shaped heat-sink fin can be customized for better cooling performance.

Color Anodization

Various colors, such as blue, red, orange, green or purple can be anodized as per your requirements.

■ Not all colors and shades of colors are possible.

Custom Length Available

APPLICATION EXAMPLE

Stabilized Diode Laser

Product by Spectra Quest Lab. (Japan)

Controller

Laser Head

IoT Gateway

Product by VNPT Technology (Vietnam)

UPS Battery Monitoring System

Product by BatteryDAQ (USA)

All-in-one Edge Node

Product by SHINWA (Japan)

4 Channel Power Switching Edge Node

Product by SHINWA (Japan)

Ultra Low Noise Regulation Power Supply

Product by Impex Technology (UAE)

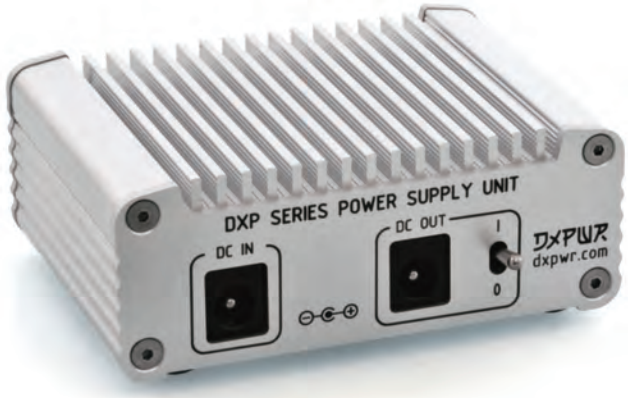

EXH series HEAT-SINK ALUMINIUM ENCLOSURE

NEW SIZE

Heat Resistant

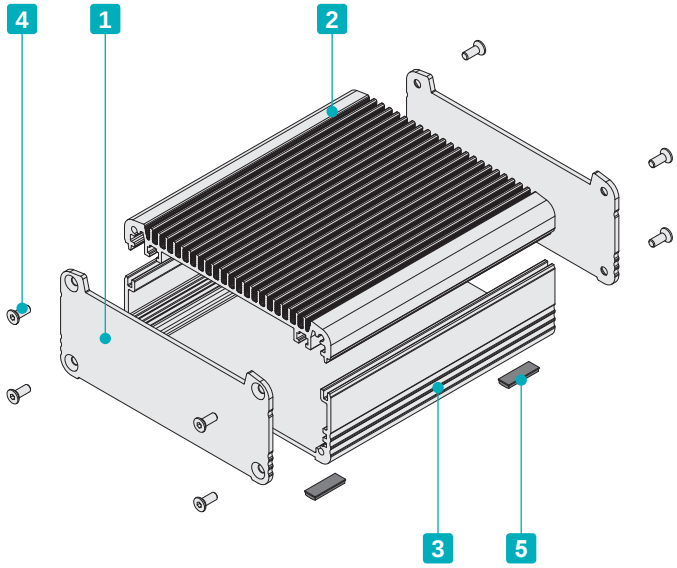

- Aluminum enclosure equipped with a highly efficient heat-sink top cover.
- Suitable to be used as a fanless PC, power amplifier, power supply etc. where heat dissipation is required.
- Selectable in 64 different sizes and 2 different color combinations.
- Grooves for M3 sliding nut are built into the heat-sink top cover and bottom frame (140mm or wider). Optional nut is available.

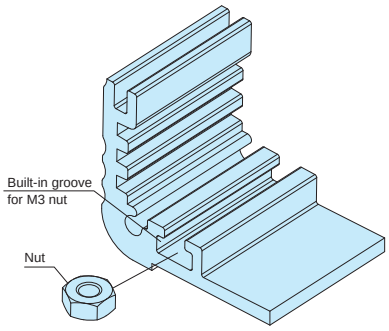

Components

No.	Part name	Pcs	Material	Color / Finish
1	Panel	2	Aluminium A1050P	Metallic silver / Painted (Unfinished inside) : Black / Anodized
2	Heat-sink top cover	1	Extruded aluminium A6063S-T5	Metallic silver / Painted (Unfinished inside) : Black / Anodized
3	Bottom frame	1	Extruded aluminium A6063S-T5	Metallic silver / Painted (Unfinished inside) : Black / Anodized
4	Screw (Hexagonal)	8	Stainless steel	Unfinished
5	Rubber feet	4	Polyurethane • Synthetic rubber	Black

■ Rubber feet material : Polyurethane : EXH8-□ ~ 19-□ models • Synthetic rubber : EXH23-□ ~ 29-□ models.

Color Type

Code	S S Silver / Silver	B B Black / Black
Color		

Included screws
EXH8-□ models : M2.5-8 x 8 pcs
EXH11-□, 14-□ models : M3-8 x 8 pcs
EXH19-□ models : M4-10 x 8 pcs
EXH23-□, 29-□ models : M5-10 x 8 pcs
※Hexagonal wrench included.

EXH dimensions

■ DXF/DWG/PDF/STP drawings available on our website.

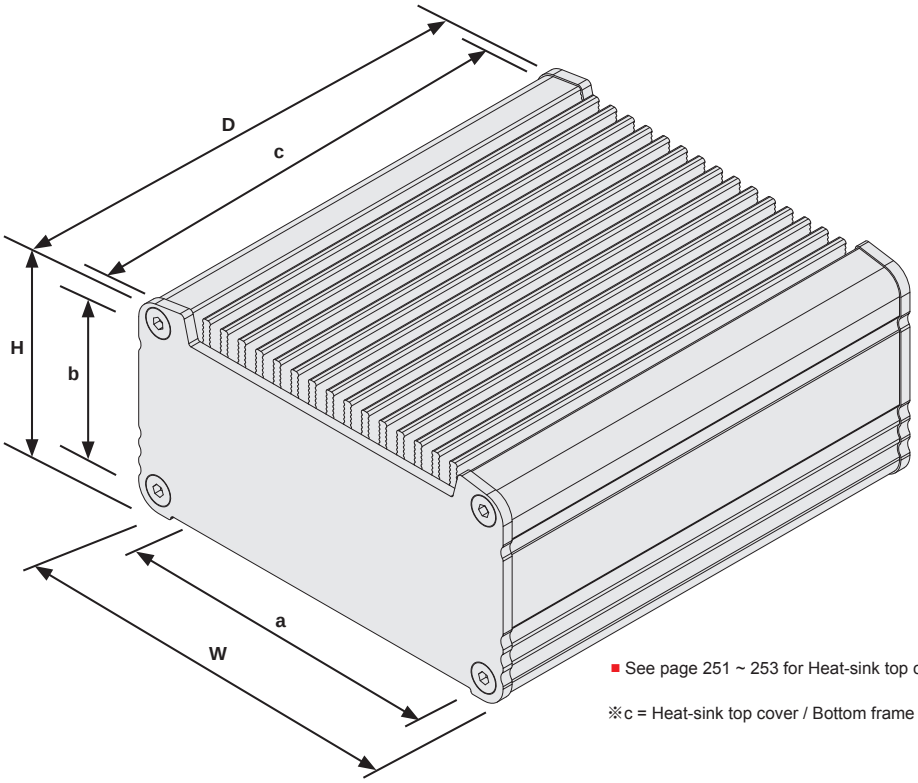

■ See page 251 ~ 253 for Heat-sink top cover / Bottom frame dimensions.

※c = Heat-sink top cover / Bottom frame length.

Product no. / Dimensions

■ Please suffix color code at the end of the product number.

Product no.	External dimensions			Internal dimensions			※Thermal resistance rate (°C/W)
	W	H	D	a	b	c	
EXH 8-3- 6□□	80.6	30.7	60	66	15	56	7.32
EXH 8-3- 9□□	80.6	30.7	90	66	15	86	5.65
EXH 8-3-12□□	80.6	30.7	120	66	15	116	4.72
EXH 8-4- 6□□	80.6	40.7	60	66	25	56	7.32
EXH 8-4- 9□□	80.6	40.7	90	66	25	86	5.65
EXH 8-4-12□□	80.6	40.7	120	66	25	116	4.72
EXH 8-6- 6□□	80.6	55.7	60	66	40	56	7.32
EXH 8-6- 9□□	80.6	55.7	90	66	40	86	5.65
EXH 8-6-12□□	80.6	55.7	120	66	40	116	4.72
EXH11-3- 8□□	106	31.1	78	88.5	14	74	4.82
EXH11-3-12□□	106	31.1	118	88.5	14	114	3.72
EXH11-3-16□□	106	31.1	164	88.5	14	160	3.03
EXH11-5- 8□□	106	46.1	78	88.5	29	74	4.82
EXH11-5-12□□	106	46.1	118	88.5	29	114	3.72
EXH11-5-16□□	106	46.1	164	88.5	29	160	3.03
EXH11-6- 8□□	106	61.1	78	88.5	44	74	4.82
EXH11-6-12□□	106	61.1	118	88.5	44	114	3.72
EXH11-6-16□□	106	61.1	164	88.5	44	160	3.03
EXH14-4-10□□	141	36.1	97	101.8	24.3	93	3.4
EXH14-4-14□□	141	36.1	137	101.8	24.3	133	2.75
EXH14-4-19□□	141	36.1	187	101.8	24.3	183	2.27
EXH14-5-10□□	141	51.1	97	101.8	39.3	93	3.4
EXH14-5-14□□	141	51.1	137	101.8	39.3	133	2.75
EXH14-5-19□□	141	51.1	187	101.8	39.3	183	2.27
EXH14-7-10□□	141	71.1	97	101.8	59.3	93	3.4
EXH14-7-14□□	141	71.1	137	101.8	59.3	133	2.75
EXH14-7-19□□	141	71.1	187	101.8	59.3	183	2.27
EXH14-9-10□□	141	91.1	97	101.8	79.3	93	3.4
EXH14-9-14□□	141	91.1	137	101.8	79.3	133	2.75
EXH14-9-19□□	141	91.1	187	101.8	79.3	183	2.27

※Thermal resistance test condition
- Ambient air cooling.
- Heat-sink fins are set perpendicular to the ground with temperature at 60°C.
- Painted aluminium extrusion.
- Heat source is applied on the opposite side (inner side) of the fins.

Product no.	External dimensions			Internal dimensions			※Thermal resistance rate (°C/W)
	W	H	D	a	b	c	
EXH19- 4-13□□	186.5	43.5	125	131	26.8	120	1.92
EXH19- 4-18□□	186.5	43.5	177	131	26.8	172	1.56
EXH19- 4-23□□	186.5	43.5	230	131	26.8	225	1.32
EXH19- 4-29□□	186.5	43.5	285	131	26.8	280	1.15
EXH19- 6-13□□	186.5	61.5	125	131	44.8	120	1.92
EXH19- 6-18□□	186.5	61.5	177	131	44.8	172	1.56
EXH19- 6-23□□	186.5	61.5	230	131	44.8	225	1.32
EXH19- 6-29□□	186.5	61.5	285	131	44.8	280	1.15
EXH19- 8-13□□	186.5	81.5	125	131	64.8	120	1.92
EXH19- 8-18□□	186.5	81.5	177	131	64.8	172	1.56
EXH19- 8-23□□	186.5	81.5	230	131	64.8	225	1.32
EXH19- 8-29□□	186.5	81.5	285	131	64.8	280	1.15
EXH19-11-13□□	186.5	106.5	125	131	89.8	120	1.92
EXH19-11-18□□	186.5	106.5	177	131	89.8	172	1.56
EXH19-11-23□□	186.5	106.5	230	131	89.8	225	1.32
EXH19-11-29□□	186.5	106.5	285	131	89.8	280	1.15
EXH23- 5-15□□	232	52	153	176	34.8	147	1.47
EXH23- 5-21□□	232	52	213	176	34.8	207	1.2
EXH23- 5-27□□	232	52	273	176	34.8	267	1.03
EXH23- 5-33□□	232	52	333	176	34.8	327	0.91
EXH23- 8-15□□	232	77	153	176	59.8	147	1.47
EXH23- 8-21□□	232	77	213	176	59.8	207	1.2
EXH23- 8-27□□	232	77	273	176	59.8	267	1.03
EXH23- 8-33□□	232	77	333	176	59.8	327	0.91
EXH23-10-15□□	232	102	153	176	84.8	147	1.47
EXH23-10-21□□	232	102	213	176	84.8	207	1.2
EXH23-10-27□□	232	102	273	176	84.8	267	1.03
EXH23-10-33□□	232	102	333	176	84.8	327	0.91
NEW EXH29- 8-23□□	287.5	77.5	234	230	59.5	228	0.97
NEW EXH29- 8-30□□	287.5	77.5	304	230	59.5	298	0.82
NEW EXH29- 8-38□□	287.5	77.5	384	230	59.5	378	0.71
NEW EXH29-13-23□□	287.5	127.5	234	230	109.5	228	0.97
NEW EXH29-13-30□□	287.5	127.5	304	230	109.5	298	0.82
NEW EXH29-13-38□□	287.5	127.5	384	230	109.5	378	0.71

■ Custom length is available.

EXHE series HEAT-SINK ALUMINIUM EMC SHIELDED ENCLOSURE

NEW

Heat Resistant

EMC Shielding Effects

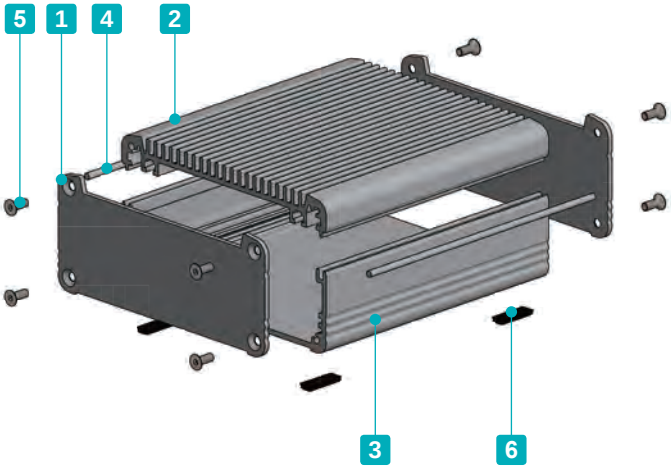

- EMC shielding is achieved by having the unfinished inner sides of the heat-sink top cover, bottom frame and panels, as well as the shielding gasket in contact with one another.
- Aluminum enclosure equipped with a highly efficient heat-sink top cover.
- Grooves for M3 sliding nut are built into the heat-sink top cover and bottom frame (140mm or wider). Optional nut is available.

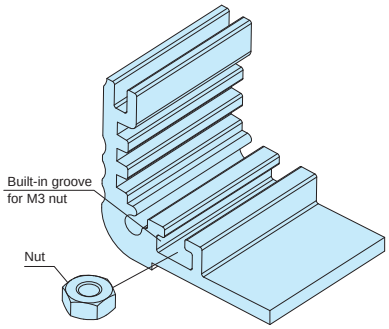

Components

No.	Part name	Pcs	Material	Color / Finish
1	Panel	2	Aluminium A1050P	Metallic silver / Painted (Unfinished inside)
2	Heat-sink top cover	1	Extruded aluminium A6063S-T5	Metallic silver / Painted (Unfinished inside)
3	Bottom frame	1	Extruded aluminium A6063S-T5	Metallic silver / Painted (Unfinished inside)
4	Fabric-over-foam gasket	2	Conductive fabric : TPE	Metallic gray
5	Screw (Hexagonal)	8	Stainless steel	Unfinished
6	Rubber feet	4	Polyurethane • Synthetic rubber	Black

■ Rubber feet material : Polyurethane : EXHE8-□ ~ 19-□models • Synthetic rubber : EXHE23-□ ~ 29-□ models.

How to install shield gaskets

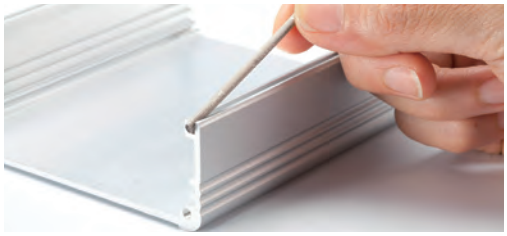

■ Insert fabric-over-foam gaskets into the joint-grooves on both sides of the bottom cover.

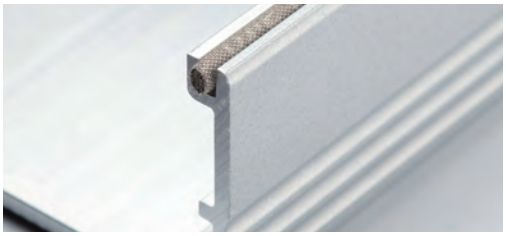

■ Ensure that a small portion of the fabric-over-foam gaskets protrude out in order to maintain connections with the end panels.

Included screws
EXHE8-□ models : M2.5-8 x 8 pcs
EXHE11-□, 14-□ models : M3-8 x 8 pcs
EXHE19-□ models : M4-10 x 8 pcs
EXHE23-□, 29-□ models : M5-10 x 8 pcs
※Hexagonal wrench included.

EXHE dimensions

■ DXF/DWG/PDF/STP drawings available on our website.

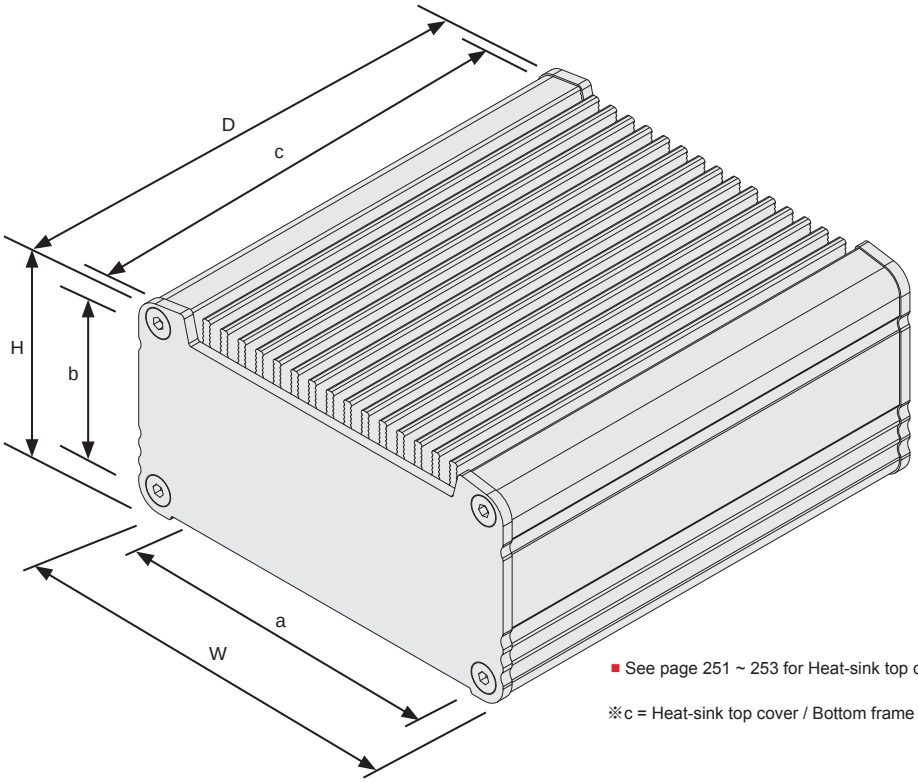

■ See page 251 ~ 253 for Heat-sink top cover / Bottom frame dimensions.

※c = Heat-sink top cover / Bottom frame length.

Product no. / Dimensions

Product no.	External dimensions			Internal dimensions			※Thermal resistance rate (°C/W)
	W	H	D	a	b	c	
EXHE 8-3- 6SS	80.6	30.7	60	66	15	56	7.32
EXHE 8-3- 9SS	80.6	30.7	90	66	15	86	5.65
EXHE 8-3-12SS	80.6	30.7	120	66	15	116	4.72
EXHE 8-4- 6SS	80.6	40.7	60	66	25	56	7.32
EXHE 8-4- 9SS	80.6	40.7	90	66	25	86	5.65
EXHE 8-4-12SS	80.6	40.7	120	66	25	116	4.72
EXHE 8-6- 6SS	80.6	55.7	60	66	40	56	7.32
EXHE 8-6- 9SS	80.6	55.7	90	66	40	86	5.65
EXHE 8-6-12SS	80.6	55.7	120	66	40	116	4.72
EXHE11-3- 8SS	106	31.1	78	88.5	14	74	4.82
EXHE11-3-12SS	106	31.1	118	88.5	14	114	3.72
EXHE11-3-16SS	106	31.1	164	88.5	14	160	3.03
EXHE11-5- 8SS	106	46.1	78	88.5	29	74	4.82
EXHE11-5-12SS	106	46.1	118	88.5	29	114	3.72
EXHE11-5-16SS	106	46.1	164	88.5	29	160	3.03
EXHE11-6- 8SS	106	61.1	78	88.5	44	74	4.82
EXHE11-6-12SS	106	61.1	118	88.5	44	114	3.72
EXHE11-6-16SS	106	61.1	164	88.5	44	160	3.03
EXHE14-4-10SS	141	36.1	97	101.8	24.3	93	3.4
EXHE14-4-14SS	141	36.1	137	101.8	24.3	133	2.75
EXHE14-4-19SS	141	36.1	187	101.8	24.3	183	2.27
EXHE14-5-10SS	141	51.1	97	101.8	39.3	93	3.4
EXHE14-5-14SS	141	51.1	137	101.8	39.3	133	2.75
EXHE14-5-19SS	141	51.1	187	101.8	39.3	183	2.27
EXHE14-7-10SS	141	71.1	97	101.8	59.3	93	3.4
EXHE14-7-14SS	141	71.1	137	101.8	59.3	133	2.75
EXHE14-7-19SS	141	71.1	187	101.8	59.3	183	2.27
EXHE14-9-10SS	141	91.1	97	101.8	79.3	93	3.4
EXHE14-9-14SS	141	91.1	137	101.8	79.3	133	2.75
EXHE14-9-19SS	141	91.1	187	101.8	79.3	183	2.27

※Thermal resistance test condition
- Ambient air cooling.
- Heat-sink fins are set perpendicular to the ground with temperature at 60°C.
- Painted aluminium extrusion.
- Heat source is applied on the opposite side (inner side) of the fins.

Product no.	External dimensions			Internal dimensions			※Thermal resistance rate (°C/W)
	W	H	D	a	b	c	
EXHE19- 4-13SS	186.5	43.5	125	131	26.8	120	1.92
EXHE19- 4-18SS	186.5	43.5	177	131	26.8	172	1.56
EXHE19- 4-23SS	186.5	43.5	230	131	26.8	225	1.32
EXHE19- 4-29SS	186.5	43.5	285	131	26.8	280	1.15
EXHE19- 6-13SS	186.5	61.5	125	131	44.8	120	1.92
EXHE19- 6-18SS	186.5	61.5	177	131	44.8	172	1.56
EXHE19- 6-23SS	186.5	61.5	230	131	44.8	225	1.32
EXHE19- 6-29SS	186.5	61.5	285	131	44.8	280	1.15
EXHE19- 8-13SS	186.5	81.5	125	131	64.8	120	1.92
EXHE19- 8-18SS	186.5	81.5	177	131	64.8	172	1.56
EXHE19- 8-23SS	186.5	81.5	230	131	64.8	225	1.32
EXHE19- 8-29SS	186.5	81.5	285	131	64.8	280	1.15
EXHE19-11-13SS	186.5	106.5	125	131	89.8	120	1.92
EXHE19-11-18SS	186.5	106.5	177	131	89.8	172	1.56
EXHE19-11-23SS	186.5	106.5	230	131	89.8	225	1.32
EXHE19-11-29SS	186.5	106.5	285	131	89.8	280	1.15
EXHE23- 5-15SS	232	52	153	176	34.8	147	1.47
EXHE23- 5-21SS	232	52	213	176	34.8	207	1.2
EXHE23- 5-27SS	232	52	273	176	34.8	267	1.03
EXHE23- 5-33SS	232	52	333	176	34.8	327	0.91
EXHE23- 8-15SS	232	77	153	176	59.8	147	1.47
EXHE23- 8-21SS	232	77	213	176	59.8	207	1.2
EXHE23- 8-27SS	232	77	273	176	59.8	267	1.03
EXHE23- 8-33SS	232	77	333	176	59.8	327	0.91
EXHE23-10-15SS	232	102	153	176	84.8	147	1.47
EXHE23-10-21SS	232	102	213	176	84.8	207	1.2
EXHE23-10-27SS	232	102	273	176	84.8	267	1.03
EXHE23-10-33SS	232	102	333	176	84.8	327	0.91
EXHE29- 8-23SS	287.5	77.5	234	230	59,5	228	0.97
EXHE29- 8-30SS	287.5	77.5	304	230	59,5	298	0.82
EXHE29- 8-38SS	287.5	77.5	384	230	59,5	378	0.71
EXHE29-13-23SS	287.5	127.5	234	230	109.5	228	0.97
EXHE29-13-30SS	287.5	127.5	304	230	109.5	298	0.82
EXHE29-13-38SS	287.5	127.5	384	230	109.5	378	0.71

■ Custom length is available.

EXHF series FLANGED HEAT-SINK ALUMINIUM ENCLOSURE

NEW SIZE

Heat Resistant

- Equipped with flanged bracket for easy wall mounting.
- Aluminum enclosure equipped with a highly efficient heat-sink top cover.

EXHF8-□, 11-□, 14-□

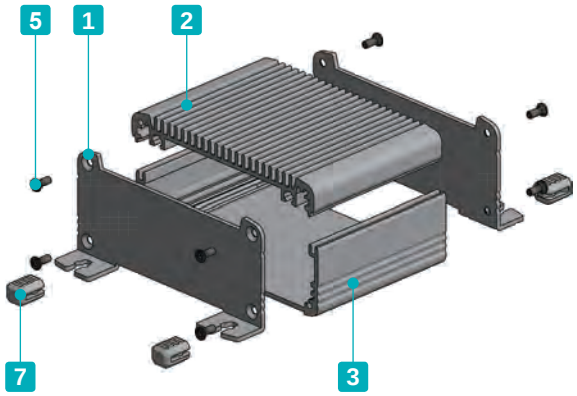

EXHF19-□, 23-□, 29-□

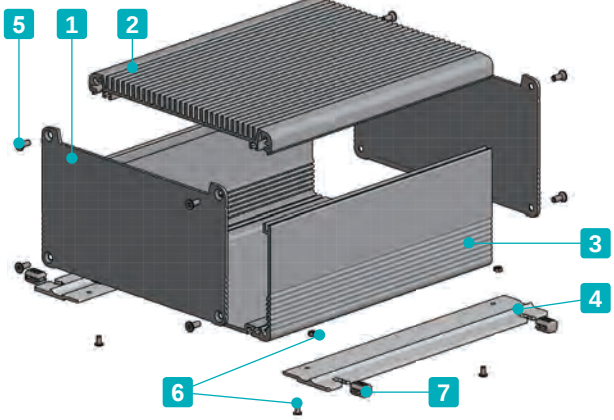

Components

No.	Part name	Pcs	Material	Color / Finish
1	Flanged panel (EXHF8-□, 11-□, 14-□) Panel (EXHF19-□, 23-□, 29-□)	2	Aluminium A1050P	Metallic silver / Painted (Unfinished inside) : Black / Anodized
2	Heat-sink top cover	1	Extruded aluminium A6063S-T5	Metallic silver / Painted (Unfinished inside) : Black / Anodized
3	Bottom frame	1	Extruded aluminium A6063S-T5	Metallic silver / Painted (Unfinished inside) : Black / Anodized
4	Flange bracket	2	Extruded aluminium A6063S-T5	Metallic silver / Painted • Black / Anodized
5	Panel screw (Hexagonal)	8	Stainless steel	Unfinished
6	Flange screw & nut	4 each	Steel	Black trivalent chromate
7	Rubber feet	4	Silicone	Black

Color Type

Code	SS Silver / Silver	BB Black / Black
Color	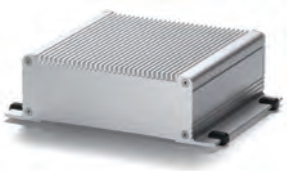	

Included screws
EXHF8-□ models : M2.5-8 x 8 pcs
EXHF11-□, 14-□ models : M3-8 x 8 pcs
EXHF19-□ models : M4-10 x 8 pcs
EXHF23-□, 29-□ models : M5-10 x 8 pcs
※Hexagonal wrench included.

EXHF dimensions

■ DXF/DWG/PDF/STP drawings available on our website.

EXHF8-□, 11-□, 14-□

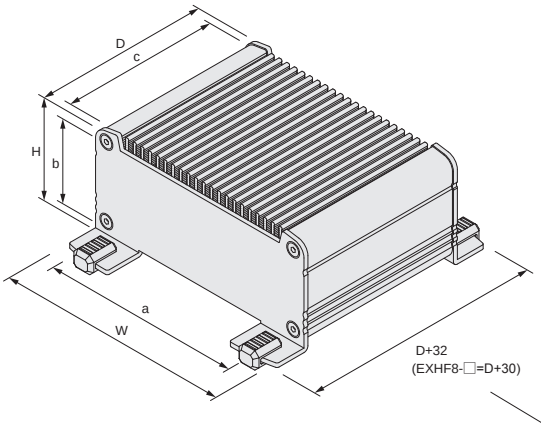

EXHF19-□, 23-□, 29-□

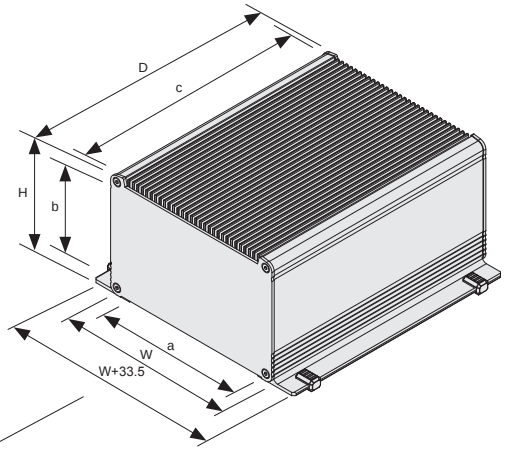

■ See page 251 ~ 253 for Heat-sink top cover / Bottom frame dimensions.
※c = Heat-sink top cover / Bottom frame length.

*Rubber feet dimensions are not included.

Product no. / Dimensions

■ Please suffix color code at the end of the product number.

Product no.	External dimensions			Internal dimensions			※Thermal resistance rate (°C/W)
	W	H	D	a	b	c	
NEW EXHF 8-3- 6□□	80.6	32.8	60	66	15	56	7.32
NEW EXHF 8-3- 9□□	80.6	32.8	90	66	15	86	5.65
NEW EXHF 8-3-12□□	80.6	32.8	120	66	15	116	4.72
NEW EXHF 8-4- 6□□	80.6	42.8	60	66	25	56	7.32
NEW EXHF 8-4- 9□□	80.6	42.8	90	66	25	86	5.65
NEW EXHF 8-4-12□□	80.6	42.8	120	66	25	116	4.72
NEW EXHF 8-6- 6□□	80.6	57.8	60	66	40	56	7.32
NEW EXHF 8-6- 9□□	80.6	57.8	90	66	40	86	5.65
NEW EXHF 8-6-12□□	80.6	57.8	120	66	40	116	4.72
NEW EXHF11-3- 8□□	106	33.1	78	88.5	14	74	4.82
NEW EXHF11-3-12□□	106	33.1	118	88.5	14	114	3.72
NEW EXHF11-3-16□□	106	33.1	164	88.5	14	160	3.03
NEW EXHF11-5- 8□□	106	48.1	78	88.5	29	74	4.82
NEW EXHF11-5-12□□	106	48.1	118	88.5	29	114	3.72
NEW EXHF11-5-16□□	106	48.1	164	88.5	29	160	3.03
NEW EXHF11-6- 8□□	106	63.1	78	88.5	44	74	4.82
NEW EXHF11-6-12□□	106	63.1	118	88.5	44	114	3.72
NEW EXHF11-6-16□□	106	63.1	164	88.5	44	160	3.03
NEW EXHF14-4-10□□	141	38.1	97	101.8	24.3	93	3.4
NEW EXHF14-4-14□□	141	38.1	137	101.8	24.3	133	2.75
NEW EXHF14-4-19□□	141	38.1	187	101.8	24.3	183	2.27
NEW EXHF14-5-10□□	141	53.1	97	101.8	39.3	93	3.4
NEW EXHF14-5-14□□	141	53.1	137	101.8	39.3	133	2.75
NEW EXHF14-5-19□□	141	53.1	187	101.8	39.3	183	2.27
NEW EXHF14-7-10□□	141	73.1	97	101.8	59.3	93	3.4
NEW EXHF14-7-14□□	141	73.1	137	101.8	59.3	133	2.75
NEW EXHF14-7-19□□	141	73.1	187	101.8	59.3	183	2.27
NEW EXHF14-9-10□□	141	93.1	97	101.8	79.3	93	3.4
NEW EXHF14-9-14□□	141	93.1	137	101.8	79.3	133	2.75
NEW EXHF14-9-19□□	141	93.1	187	101.8	79.3	183	2.27

※Thermal resistance test condition
- Ambient air cooling.
- Heat-sink fins are set perpendicular to the ground with temperature at 60°C.
- Painted aluminium extrusion.
- Heat source is applied on the opposite side (inner side) of the fins.

Product no.	External dimensions			Internal dimensions			※Thermal resistance rate (°C/W)
	W	H	D	a	b	c	
EXHF19- 4-13□□	186.5	45.25	125	131	26.8	120	1.92
EXHF19- 4-18□□	186.5	45.25	177	131	26.8	172	1.56
EXHF19- 4-23□□	186.5	45.25	230	131	26.8	225	1.32
EXHF19- 4-29□□	186.5	45.25	285	131	26.8	280	1.15
EXHF19- 6-13□□	186.5	63.25	125	131	44.8	120	1.92
EXHF19- 6-18□□	186.5	63.25	177	131	44.8	172	1.56
EXHF19- 6-23□□	186.5	63.25	230	131	44.8	225	1.32
EXHF19- 6-29□□	186.5	63.25	285	131	44.8	280	1.15
EXHF19- 8-13□□	186.5	83.25	125	131	64.8	120	1.92
EXHF19- 8-18□□	186.5	83.25	177	131	64.8	172	1.56
EXHF19- 8-23□□	186.5	83.25	230	131	64.8	225	1.32
EXHF19- 8-29□□	186.5	83.25	285	131	64.8	280	1.15
EXHF19-11-13□□	186.5	108.25	125	131	89.8	120	1.92
EXHF19-11-18□□	186.5	108.25	177	131	89.8	172	1.56
EXHF19-11-23□□	186.5	108.25	230	131	89.8	225	1.32
EXHF19-11-29□□	186.5	108.25	285	131	89.8	280	1.15
EXHF23- 5-15□□	232	53.5	153	176	34.8	147	1.47
EXHF23- 5-21□□	232	53.5	213	176	34.8	207	1.2
EXHF23- 5-27□□	232	53.5	273	176	34.8	267	1.03
EXHF23- 5-33□□	232	53.5	333	176	34.8	327	0.91
EXHF23- 8-15□□	232	78.5	153	176	59.8	147	1.47
EXHF23- 8-21□□	232	78.5	213	176	59.8	207	1.2
EXHF23- 8-27□□	232	78.5	273	176	59.8	267	1.03
EXHF23- 8-33□□	232	78.5	333	176	59.8	327	0.91
EXHF23-10-15□□	232	103.5	153	176	84.8	147	1.47
EXHF23-10-21□□	232	103.5	213	176	84.8	207	1.2
EXHF23-10-27□□	232	103.5	273	176	84.8	267	1.03
EXHF23-10-33□□	232	103.5	333	176	84.8	327	0.91
NEW EXHF29- 8-23□□	287.5	78.75	234	230	59.5	228	0.97
NEW EXHF29- 8-30□□	287.5	78.75	304	230	59.5	298	0.82
NEW EXHF29- 8-38□□	287.5	78.75	384	230	59.5	378	0.71
NEW EXHF29-13-23□□	287.5	128.75	234	230	109.5	228	0.97
NEW EXHF29-13-30□□	287.5	128.75	304	230	109.5	298	0.82
NEW EXHF29-13-38□□	287.5	128.75	384	230	109.5	378	0.71

■ Custom length is available.

■ Grooves for M3 sliding nut are built into the heat-sink top cover and bottom frame (140mm or wider). Optional nut is available.

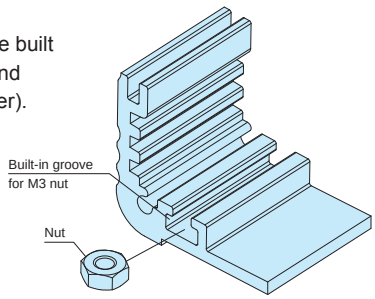

■ Flange bracket is installed as per the diagram below.

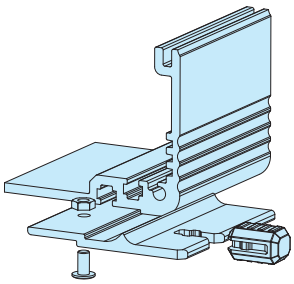

EXHFE series FLANGED HEAT-SINK ALUMINIUM EMC SHIELDED ENCLOSURE

NEW

Heat Resistant

EMC Shielding Effects

- EMC shielding is achieved by having the unfinished internal parts of the enclosure, as well as the fabric-over-foam gasket, in contact with one another.
- Aluminum enclosure equipped with a highly efficient heat-sink top cover.
- Equipped with flanged bracket for easy wall mounting.

EXHFE8-□, 11-□, 14-□

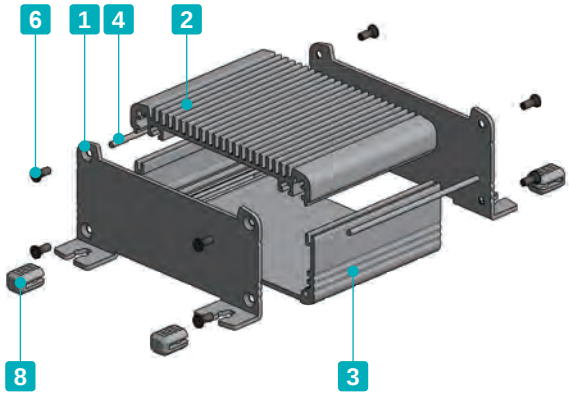

EXHFE19-□, 23-□, 29-□

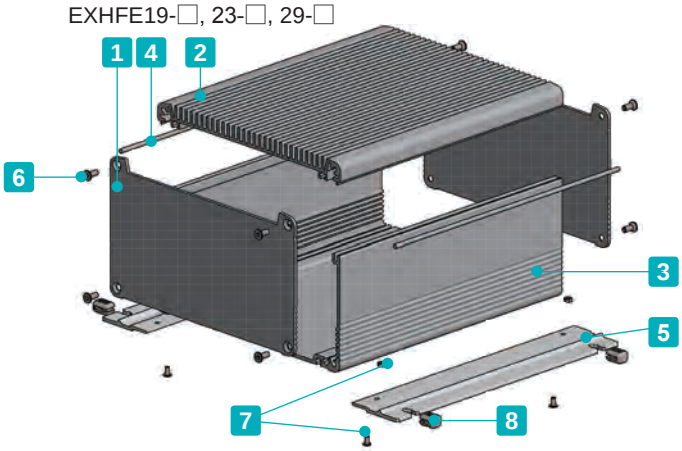

Components

No.	Part name	Pcs	Material	Color / Finish
1	Flanged panel (EXHF8-□, 11-□, 14-□) Panel (EXHF19-□, 23-□, 29-□)	2	Aluminium A1050P	Metallic silver / Painted (Unfinished inside)
2	Heat-sink top cover	1	Extruded aluminium A6063S-T5	Metallic silver / Painted (Unfinished inside)
3	Bottom frame	1	Extruded aluminium A6063S-T5	Metallic silver / Painted (Unfinished inside)
4	Fabric-over-foam gasket	2	Conductive fabric : TPE	Metallic gray
5	Flange bracket	2	Extruded aluminium A6063S-T5	Metallic silver / Painted
6	Panel screw (Hexagonal)	8	Stainless steel	Unfinished
7	Flange screw & nut	4 each	Steel	Black trivalent chromate
8	Rubber feet	4	Silicone	Black

How to install shield gaskets

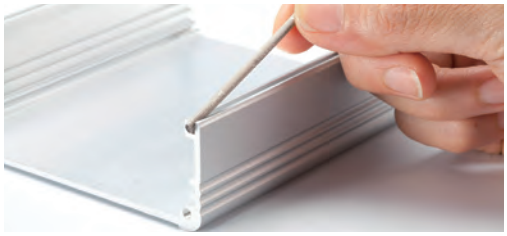

- Insert fabric-over-foam gaskets into the joint-grooves on both sides of the bottom cover.

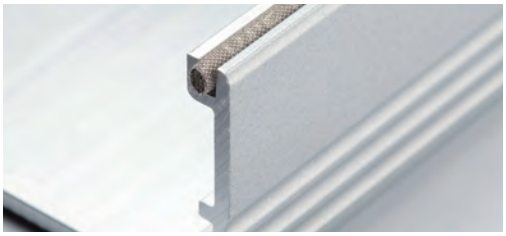

- Ensure that a small portion of the fabric-over-foam gaskets protrude out in order to maintain connections with the end panels.

Included screws
EXHFE8-□ models : M2.5-8 x 8 pcs
EXHFE11-□, 14-□ models : M3-8 x 8 pcs
EXHFE19-□ models : M4-10 x 8 pcs
EXHFE23-□, 29-□ models : M5-10 x 8 pcs
※Hexagonal wrench included.

EXHFE dimensions

■ DXF/DWG/PDF/STP drawings available on our website.

EXHFE8-□, 11-□, 14-□

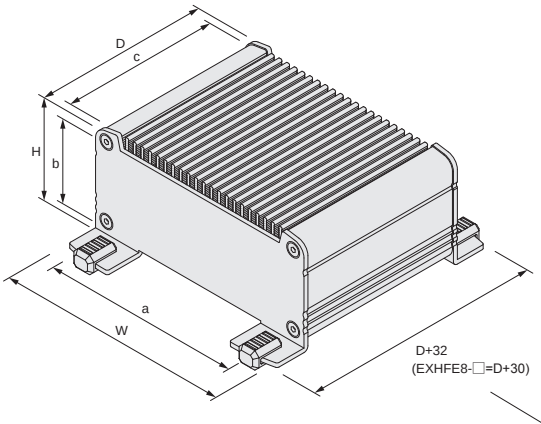

EXHFE19-□, 23-□, 29-□

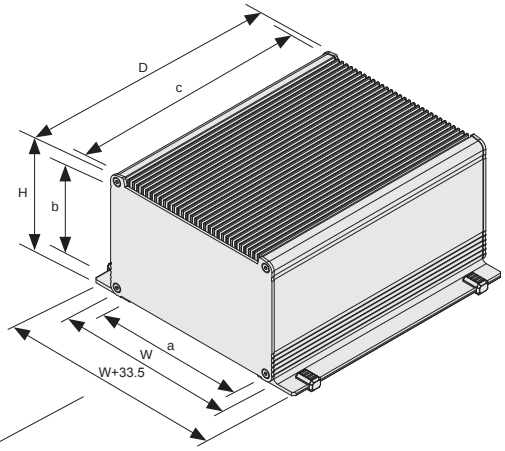

■ See page 251 ~ 253 for Heat-sink top cover / Bottom frame dimensions.
※c = Heat-sink top cover / Bottom frame length.

*Rubber feet dimensions are not included.

Product no. / Dimensions

Product no.	External dimensions			Internal dimensions			※Thermal resistance rate (°C/W)
	W	H	D	a	b	c	
EXHFE 8-3- 6SS	80.6	32.8	60	66	15	56	7.32
EXHFE 8-3- 9SS	80.6	32.8	90	66	15	86	5.65
EXHFE 8-3-12SS	80.6	32.8	120	66	15	116	4.72
EXHFE 8-4- 6SS	80.6	42.8	60	66	25	56	7.32
EXHFE 8-4- 9SS	80.6	42.8	90	66	25	86	5.65
EXHFE 8-4-12SS	80.6	42.8	120	66	25	116	4.72
EXHFE 8-6- 6SS	80.6	57.8	60	66	40	56	7.32
EXHFE 8-6- 9SS	80.6	57.8	90	66	40	86	5.65
EXHFE 8-6-12SS	80.6	57.8	120	66	40	116	4.72
EXHFE11-3- 8SS	106	33.1	78	88.5	14	74	4.82
EXHFE11-3-12SS	106	33.1	118	88.5	14	114	3.72
EXHFE11-3-16SS	106	33.1	164	88.5	14	160	3.03
EXHFE11-5- 8SS	106	48.1	78	88.5	29	74	4.82
EXHFE11-5-12SS	106	48.1	118	88.5	29	114	3.72
EXHFE11-5-16SS	106	48.1	164	88.5	29	160	3.03
EXHFE11-6- 8SS	106	63.1	78	88.5	44	74	4.82
EXHFE11-6-12SS	106	63.1	118	88.5	44	114	3.72
EXHFE11-6-16SS	106	63.1	164	88.5	44	160	3.03
EXHFE14-4-10SS	141	38.1	97	101.8	24.3	93	3.4
EXHFE14-4-14SS	141	38.1	137	101.8	24.3	133	2.75
EXHFE14-4-19SS	141	38.1	187	101.8	24.3	183	2.27
EXHFE14-5-10SS	141	53.1	97	101.8	39.3	93	3.4
EXHFE14-5-14SS	141	53.1	137	101.8	39.3	133	2.75
EXHFE14-5-19SS	141	53.1	187	101.8	39.3	183	2.27
EXHFE14-7-10SS	141	73.1	97	101.8	59.3	93	3.4
EXHFE14-7-14SS	141	73.1	137	101.8	59.3	133	2.75
EXHFE14-7-19SS	141	73.1	187	101.8	59.3	183	2.27
EXHFE14-9-10SS	141	93.1	97	101.8	79.3	93	3.4
EXHFE14-9-14SS	141	93.1	137	101.8	79.3	133	2.75
EXHFE14-9-19SS	141	93.1	187	101.8	79.3	183	2.27

※Thermal resistance test condition
- Ambient air cooling.
- Heat-sink fins are set perpendicular to the ground with temperature at 60°C.
- Painted aluminium extrusion.
- Heat source is applied on the opposite side (inner side) of the fins.

Product no.	External dimensions			Internal dimensions			※Thermal resistance rate (°C/W)
	W	H	D	a	b	c	
EXHFE19- 4-13SS	186.5	45.25	125	131	26.8	120	1.92
EXHFE19- 4-18SS	186.5	45.25	177	131	26.8	172	1.56
EXHFE19- 4-23SS	186.5	45.25	230	131	26.8	225	1.32
EXHFE19- 4-29SS	186.5	45.25	285	131	26.8	280	1.15
EXHFE19- 6-13SS	186.5	63.25	125	131	44.8	120	1.92
EXHFE19- 6-18SS	186.5	63.25	177	131	44.8	172	1.56
EXHFE19- 6-23SS	186.5	63.25	230	131	44.8	225	1.32
EXHFE19- 6-29SS	186.5	63.25	285	131	44.8	280	1.15
EXHFE19- 8-13SS	186.5	83.25	125	131	64.8	120	1.92
EXHFE19- 8-18SS	186.5	83.25	177	131	64.8	172	1.56
EXHFE19- 8-23SS	186.5	83.25	230	131	64.8	225	1.32
EXHFE19- 8-29SS	186.5	83.25	285	131	64.8	280	1.15
EXHFE19-11-13SS	186.5	108.25	125	131	89.8	120	1.92
EXHFE19-11-18SS	186.5	108.25	177	131	89.8	172	1.56
EXHFE19-11-23SS	186.5	108.25	230	131	89.8	225	1.32
EXHFE19-11-29SS	186.5	108.25	285	131	89.8	280	1.15
EXHFE23- 5-15SS	232	53.5	153	176	34.8	147	1.47
EXHFE23- 5-21SS	232	53.5	213	176	34.8	207	1.2
EXHFE23- 5-27SS	232	53.5	273	176	34.8	267	1.03
EXHFE23- 5-33SS	232	53.5	333	176	34.8	327	0.91
EXHFE23- 8-15SS	232	78.5	153	176	59.8	147	1.47
EXHFE23- 8-21SS	232	78.5	213	176	59.8	207	1.2
EXHFE23- 8-27SS	232	78.5	273	176	59.8	267	1.03
EXHFE23- 8-33SS	232	78.5	333	176	59.8	327	0.91
EXHFE23-10-15SS	232	103.5	153	176	84.8	147	1.47
EXHFE23-10-21SS	232	103.5	213	176	84.8	207	1.2
EXHFE23-10-27SS	232	103.5	273	176	84.8	267	1.03
EXHFE23-10-33SS	232	103.5	333	176	84.8	327	0.91
EXHFE29- 8-23SS	287.5	78.75	234	230	59.5	228	0.97
EXHFE29- 8-30SS	287.5	78.75	304	230	59.5	298	0.82
EXHFE29- 8-38SS	287.5	78.75	384	230	59.5	378	0.71
EXHFE29-13-23SS	287.5	128.75	234	230	109.5	228	0.97
EXHFE29-13-30SS	287.5	128.75	304	230	109.5	298	0.82
EXHFE29-13-38SS	287.5	128.75	384	230	109.5	378	0.71

■ Custom length is available.

■ Grooves for M3 sliding nut are built into the heat-sink top cover and bottom frame (140mm or wider). Optional nut is available.

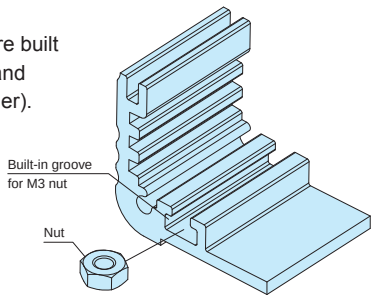

■ Flange bracket is installed as per the diagram below.

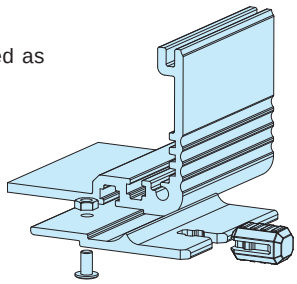

Cross-section view of heat-sink top cover & bottom frame

■ DXF/DWG/PDF/STP drawings available on our website.

EXH • EXHE • EXHF • EXHFE8-3-□

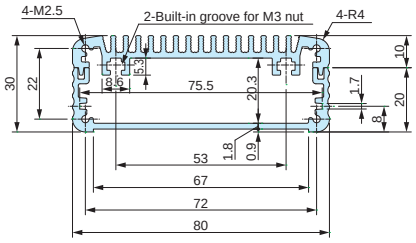

EXH • EXHE • EXHF • EXHFE8-4-□

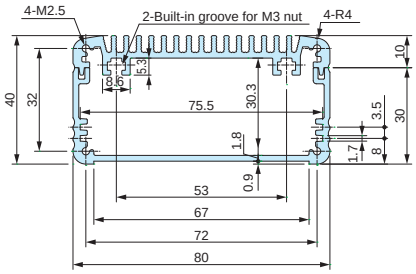

EXH • EXHE • EXHF • EXHFE8-6-□

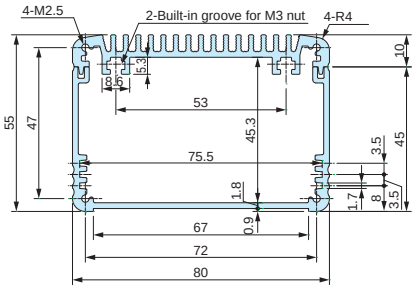

EXH • EXHE • EXHF • EXHFE11-3-□

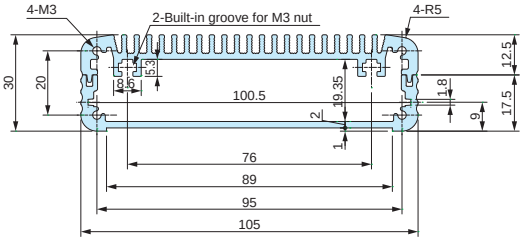

EXH • EXHE • EXHF • EXHFE11-5-□

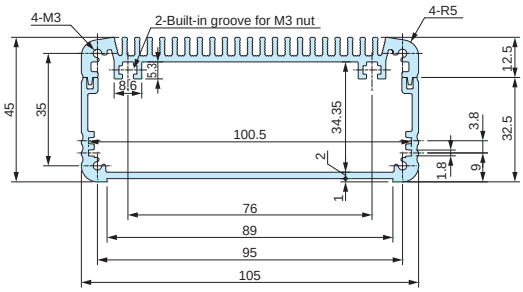

EXH • EXHE • EXHF • EXHFE11-6-□

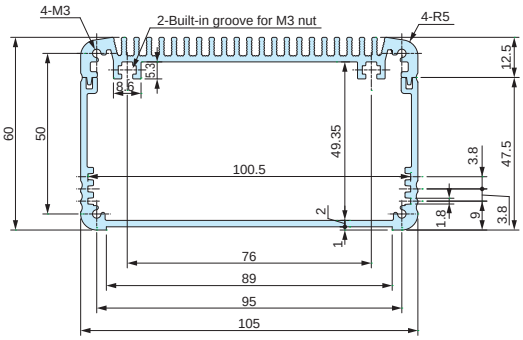

EXH • EXHE • EXHF • EXHFE14-4-□

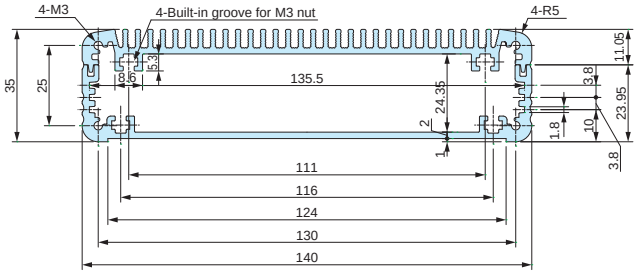

EXH • EXHE • EXHF • EXHFE14-5-□

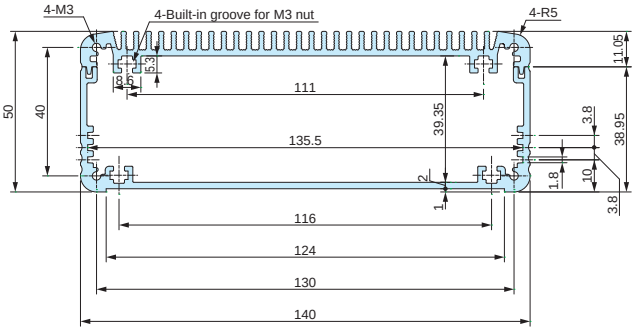

EXH • EXHE • EXHF • EXHFE14-7-□

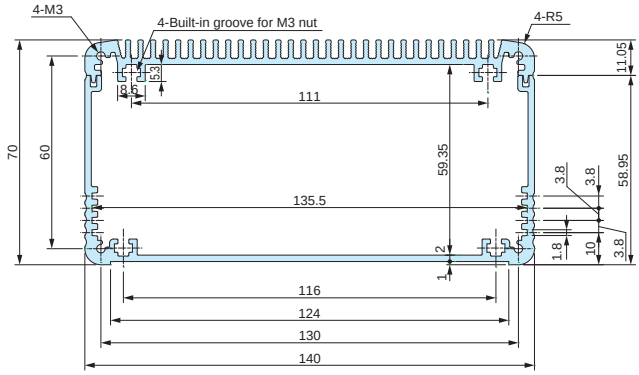

EXH • EXHE • EXHF • EXHFE14-9-□

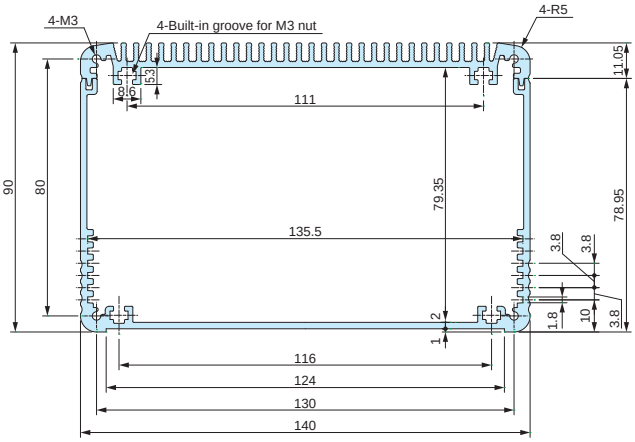

EXH • EXHE • EXHF • EXHFE19-4-□

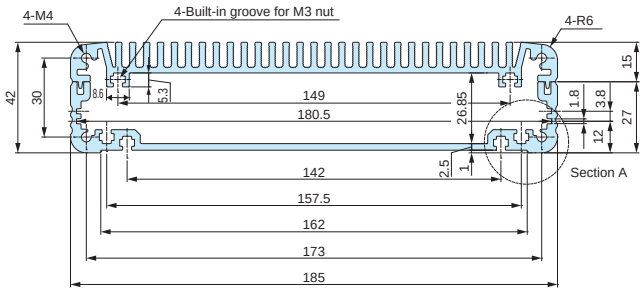

EXH • EXHE • EXHF • EXHFE19-6-□

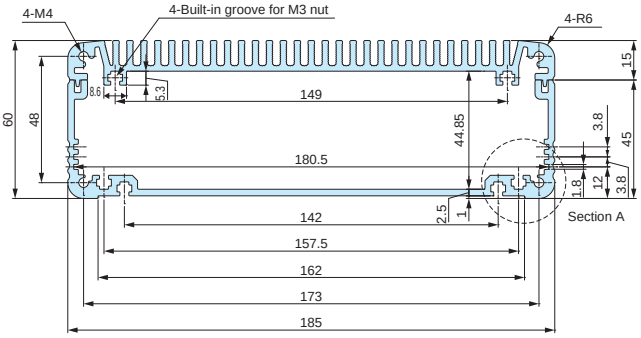

EXH • EXHE • EXHF • EXHFE19-8-□

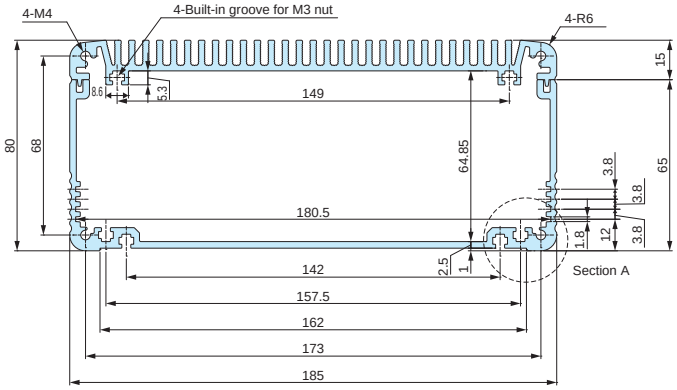

EXH • EXHE • EXHF • EXHFE19-11-□

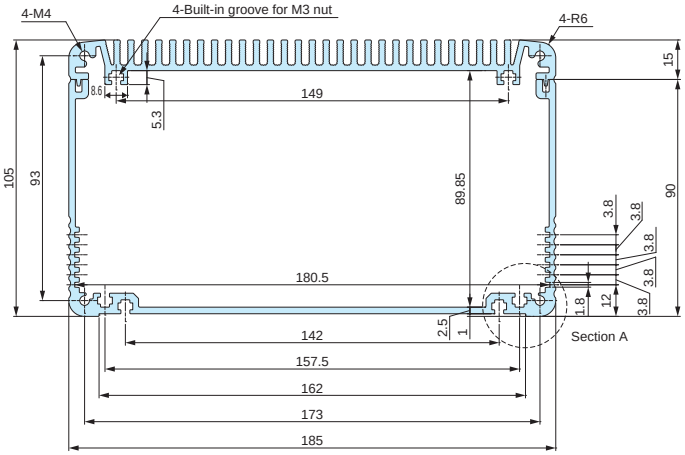

EXH • EXHE • EXHF • EXHFE23-5-□

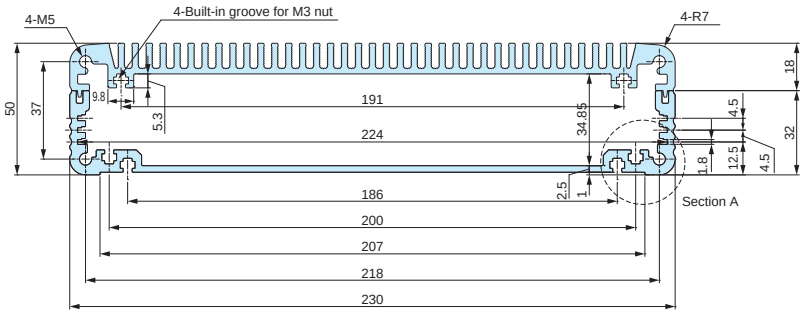

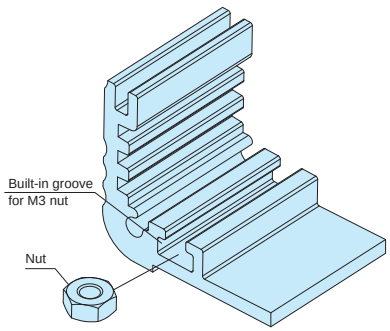

EXH • EXHE • EXHF • EXHFE23-8-□

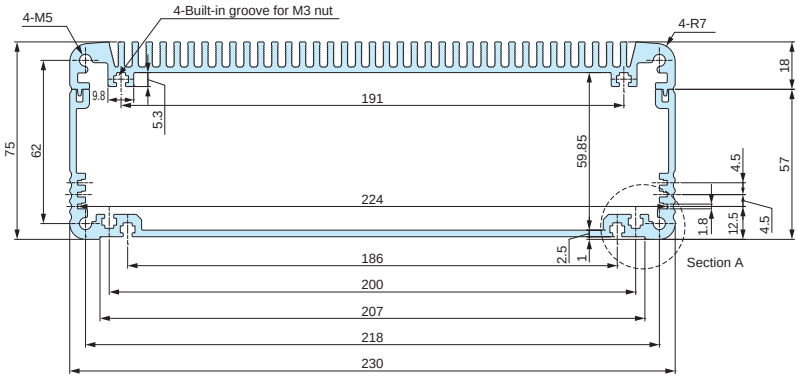

■ Optional M3 nut is available.

Sliding nut can be used on all EXH • EXHE • EXHF • EXHFE models with width 140mm or larger bottom covers, as well as all heat-sink top covers.

See page 221 for MT-3N optional M3 nut.

*See page 253 for detailed dimensions for Section A

Cross-section view of heat-sink top cover & bottom frame

■ DXF/DWG/PDF/STP drawings available on our website.

EXH • EXHE • EXHF • EXHFE23-10-□

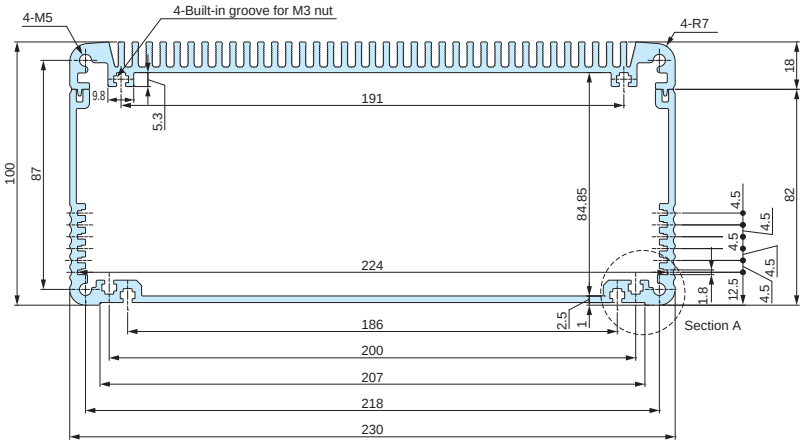

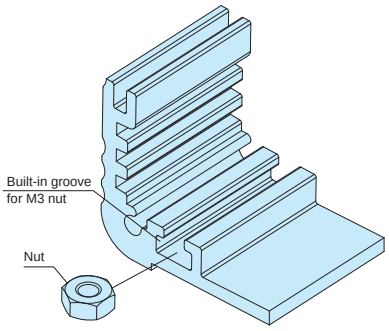

■ Optional M3 nut is available.

Sliding nut can be used on all EXH • EXHE • EXHF • EXHFE models with width 140mm or larger bottom covers, as well as all heat-sink top covers.

See page 221 for MT-3N optional M3 nut.

EXH • EXHE • EXHF • EXHFE29-8-□

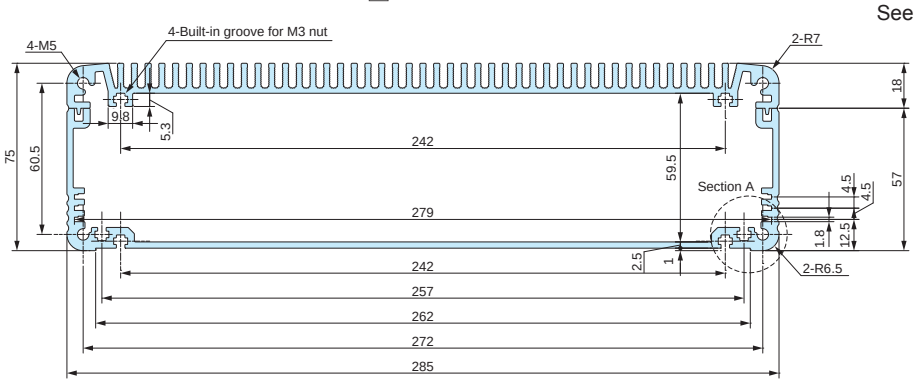

EXH • EXHE • EXHF • EXHFE29-13-□

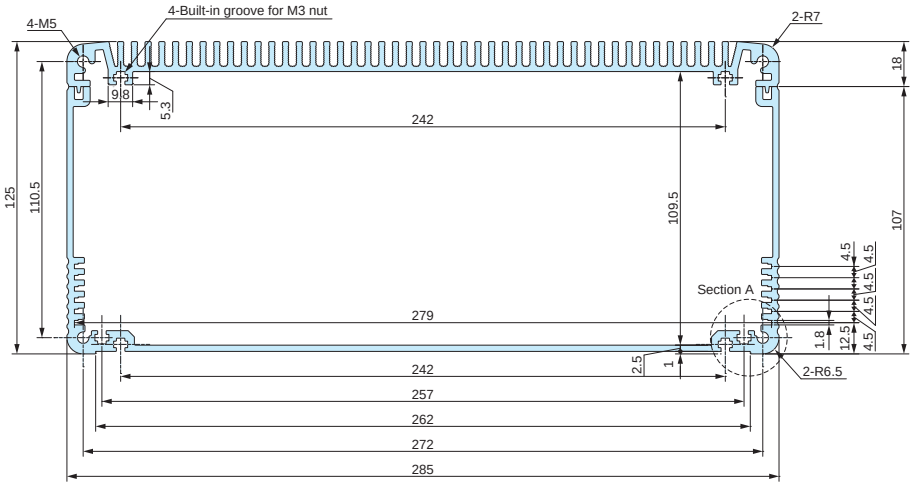

Flange bracket dimensions
(Section A)

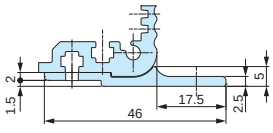

EF series WALL MOUNTING BRACKET for EX • EXH • EXHE

NEW SIZE

Installation Example

- Wall mounting bracket for EX, EXH, and EXHE series. Applicable only for width 185, 230, and 285mm bottom covers.
- Easy installation by inserting the nuts into built-in grooves on EX, EXH, and EXHE bottom cover.
- Rubber feet are included to hide the mounting cutouts when not used for wall mounting, and act as feet stabilizers for desktop use.

EF dimensions

- DXF/DWG/PDF/STP drawings available on our website.

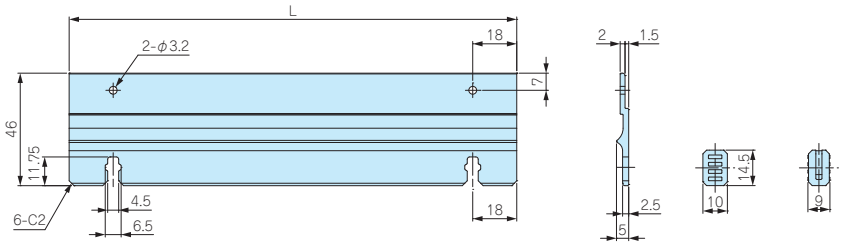

Assembly Drawings

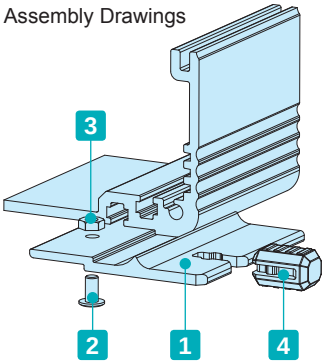

Components

No.	Part name	Pcs	Material	Color / Finish
1	Bracket	2	Extruded aluminium A6063S-T5	Metallic silver / Painted • Black / Anodized
2	Screw	4	Steel	Black trivalent chromate
3	Nut	4	Steel	Black trivalent chromate
4	Rubber feet	4	Silicone	Black

Product no. / Dimensions

Product no.		L	Suitable models
● Metallic silver	● Black		
EF19-13S	EF19-13B	119.5	EX • EXH • EXHE19-□-13
EF19-18S	EF19-18B	171.5	EX • EXH • EXHE19-□-18
EF19-23S	EF19-23B	224.5	EX • EXH • EXHE19-□-23
EF19-29S	EF19-29B	279.5	EX • EXH • EXHE19-□-29
EF23-15S	EF23-15B	146.5	EX • EXH • EXHE23-□-15
EF23-21S	EF23-21B	206.5	EX • EXH • EXHE23-□-21
EF23-27S	EF23-27B	266.5	EX • EXH • EXHE23-□-27
EF23-33S	EF23-33B	326.5	EX • EXH • EXHE23-□-33
NEW EF29-23S	NEW EF29-23B	227.5	EX • EXH • EXHE29-□-23
NEW EF29-30S	NEW EF29-30B	297.5	EX • EXH • EXHE29-□-30
NEW EF29-38S	NEW EF29-38B	377.5	EX • EXH • EXHE29-□-38

HY series HEAT-SINK ALUMINIUM ENCLOSURE

Heat Resistant

Variations of HY series, HYR and HYRH series are also available.
See website for more details.

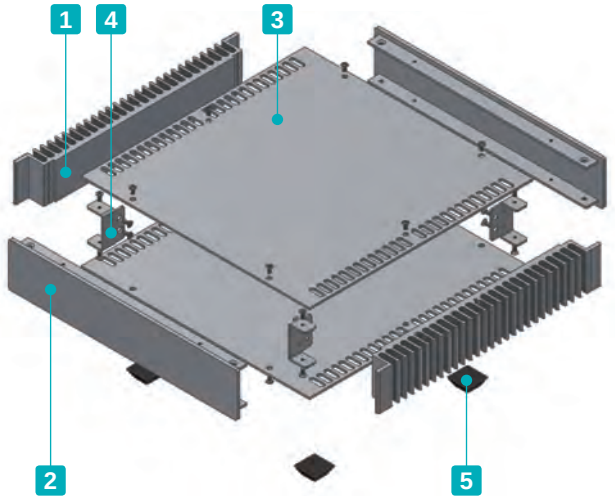

- Stylish and elegantly designed with a hairline finish.
- Excellent cooling performance with the heat-sink side plates.
- Now available in 56 sizes, and 2 different colors.
- Tough and robust enclosure from using aluminium extrusion parts.
- Simple and easy to assemble construction.
- Flat back heat-sink plates for more effective heat spreading.

Included screws
BB color type
M3-6 flat head & Black trivalent chromate x 16 pcs
M3-5 Slotted raised countersunk & Black trivalent chromate x 12 pcs
SS color type
M3-6 flat head & Nickel plated x 16 pcs
M3-5 Slotted raised countersunk & Nickel plated x 12 pcs

Components

No.	Part name	Pcs	Material	Color / Finish
1	Heat-sink side plate	2	Extruded aluminium A6063S-T5	Silver • Black / Anodized
2	Panel	2	Extruded aluminium A6063S-T5	Silver • Black / Hairline brushed & Anodized
3	Top • Bottom cover	2	Aluminium A1050P t=2.0	Silver • Black / Hairline brushed & Anodized
4	Corner support	4	Steel SPCC t=1.6	Trivalent chromate
5	Rubber feet	4	Polyurethane	Black

Accessories (Optional parts)

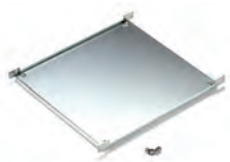

Mounting plate HYC series
See page 257

L-bracket HYCL series
See page 257

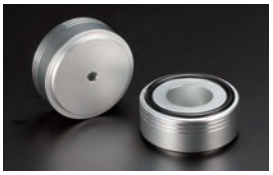

Aluminium isolation feet AFS • AFM series
See page 293 ~ 294

TORX screw - for top / bottom cover MR3-5Z series
See website

HY dimensions

■ DXF/DWG/PDF/STP drawings available on our website.

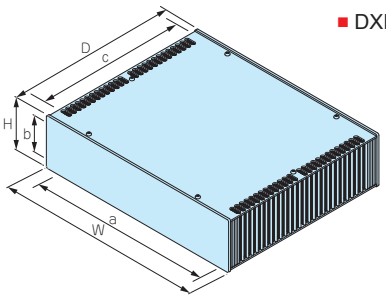

Product no.		External dimensions			Internal dimensions			Weight (kg)
● Silver	● Black	W	H	D	a	b	c	
HY 44-23-23SS	HY 44-23-23BB	230	44	231	186	36	225	1.1
HY 44-23-33SS	HY 44-23-33BB	230	44	330	186	36	324	1.6
HY 44-28-23SS	HY 44-28-23BB	280	44	231	236	36	225	1.4
HY 44-28-33SS	HY 44-28-33BB	280	44	330	236	36	324	1.9
HY 44-33-23SS	HY 44-33-23BB	330	44	231	286	36	225	1.5
HY 44-33-33SS	HY 44-33-33BB	330	44	330	286	36	324	2.2
HY 44-43-23SS	HY 44-43-23BB	430	44	231	386	36	225	1.9
HY 44-43-33SS	HY 44-43-33BB	430	44	330	386	36	324	2.6
HY 70-23-23SS	HY 70-23-23BB	230	70	231	186	62	225	1.6
HY 70-23-33SS	HY 70-23-33BB	230	70	330	186	62	324	2.2
HY 70-28-23SS	HY 70-28-23BB	280	70	231	236	62	225	1.8
HY 70-28-33SS	HY 70-28-33BB	280	70	330	236	62	324	2.5
HY 70-33-23SS	HY 70-33-23BB	330	70	231	286	62	225	2.0
HY 70-33-33SS	HY 70-33-33BB	330	70	330	286	62	324	2.8
HY 70-43-23SS	HY 70-43-23BB	430	70	231	386	62	225	2.3
HY 70-43-33SS	HY 70-43-33BB	430	70	330	386	62	324	3.2
HY 88-23-23SS	HY 88-23-23BB	230	88	231	186	80	225	1.9
HY 88-23-33SS	HY 88-23-33BB	230	88	330	186	80	324	2.6
HY 88-28-23SS	HY 88-28-23BB	280	88	231	236	80	225	2.1
HY 88-28-33SS	HY 88-28-33BB	280	88	330	236	80	324	2.8
HY 88-33-23SS	HY 88-33-23BB	330	88	231	286	80	225	2.3
HY 88-33-33SS	HY 88-33-33BB	330	88	330	286	80	324	3.1
HY 88-43-23SS	HY 88-43-23BB	430	88	231	386	80	225	2.7
HY 88-43-33SS	HY 88-43-33BB	430	88	330	386	80	324	3.6
HY 99-23-23SS	HY 99-23-23BB	230	99	231	186	91	225	2.1
HY 99-23-33SS	HY 99-23-33BB	230	99	330	186	91	324	2.7
HY 99-28-23SS	HY 99-28-23BB	280	99	231	236	91	225	2.3
HY 99-28-33SS	HY 99-28-33BB	280	99	330	236	91	324	3.1
HY 99-33-23SS	HY 99-33-23BB	330	99	231	286	91	225	2.5
HY 99-33-33SS	HY 99-33-33BB	330	99	330	286	91	324	3.4
HY 99-43-23SS	HY 99-43-23BB	430	99	231	386	91	225	2.9
HY 99-43-33SS	HY 99-43-33BB	430	99	330	386	91	324	3.9
HY133-23-23SS	HY133-23-23BB	230	132.5	231	186	124.5	225	2.6
HY133-23-33SS	HY133-23-33BB	230	132.5	330	186	124.5	324	3.4
HY133-28-23SS	HY133-28-23BB	280	132.5	231	236	124.5	225	2.8
HY133-28-33SS	HY133-28-33BB	280	132.5	330	236	124.5	324	3.8
HY133-33-23SS	HY133-33-23BB	330	132.5	231	286	124.5	225	3.0
HY133-33-33SS	HY133-33-33BB	330	132.5	330	286	124.5	324	4.1
HY133-43-23SS	HY133-43-23BB	430	132.5	231	386	124.5	225	3.5
HY133-43-33SS	HY133-43-33BB	430	132.5	330	386	124.5	324	4.7
HY149-23-23SS	HY149-23-23BB	230	149	231	186	141	225	2.8
HY149-23-33SS	HY149-23-33BB	230	149	330	186	141	324	3.8
HY149-28-23SS	HY149-28-23BB	280	149	231	236	141	225	3.1
HY149-28-33SS	HY149-28-33BB	280	149	330	236	141	324	4.2
HY149-33-23SS	HY149-33-23BB	330	149	231	286	141	225	3.3
HY149-33-33SS	HY149-33-33BB	330	149	330	286	141	324	4.5
HY149-43-23SS	HY149-43-23BB	430	149	231	386	141	225	3.8
HY149-43-33SS	HY149-43-33BB	430	149	330	386	141	324	5.1
HY177-23-23SS	HY177-23-23BB	230	177	231	186	169	225	3.4
HY177-23-33SS	HY177-23-33BB	230	177	330	186	169	324	4.5
HY177-28-23SS	HY177-28-23BB	280	177	231	236	169	225	3.6
HY177-28-33SS	HY177-28-33BB	280	177	330	236	169	324	4.8
HY177-33-23SS	HY177-33-23BB	330	177	231	286	169	225	3.9
HY177-33-33SS	HY177-33-33BB	330	177	330	286	169	324	5.2
HY177-43-23SS	HY177-43-23BB	430	177	231	386	169	225	4.5
HY177-43-33SS	HY177-43-33BB	430	177	330	386	169	324	5.8

HYC series MOUNTING PLATE for HY • HYR • HYRH

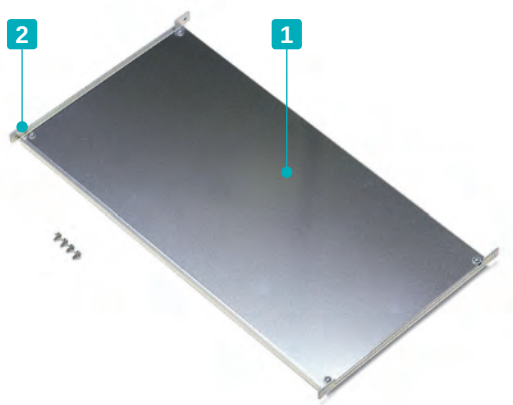

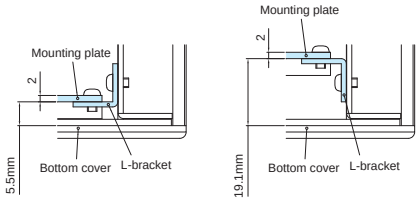

HYC dimensions

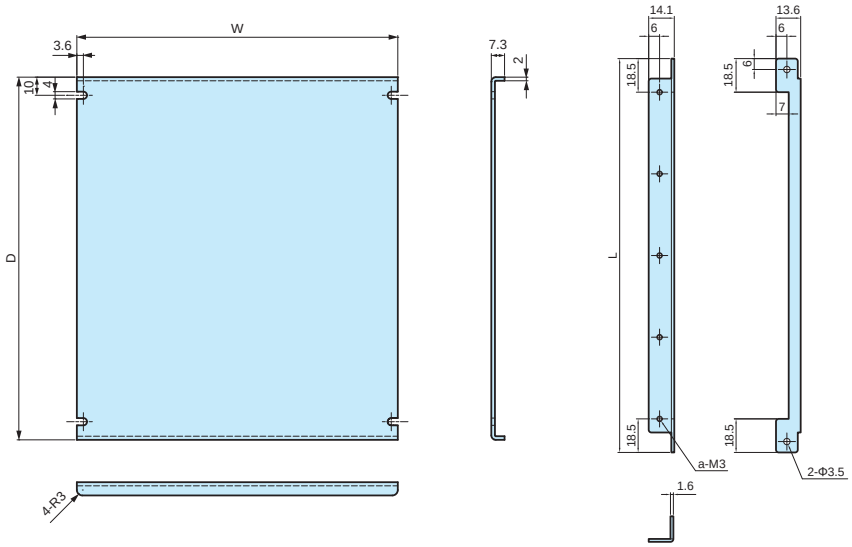

■ DXF/DWG/PDF/STP drawings available on our website.

■ Mounting plate and L-bracket set.

Components

No.	Part name	Pcs	Material	Color / Finish
1	Mounting plate	1	Aluminium A1050P t=2.0	Unfinished
2	L-bracket	2	Steel SPCC t=1.6	Trivalent chromate
—	Screw	1 set	Steel M3	Trivalent chromate

Product no. / Dimensions

Product no.	W	D	L	a	Suitable models	Weight (g)
HYC23-23	177	200	217	5	HY□-23-23	300
HYC23-28	227	200	217	5	HY□-28-23	350
HYC23-33	277	200	217	5	HY□-33-23	410
HYC23-43	377	200	217	5	HY□-43-23	520
HYC33-23	177	299	316	7	HY□-23-33	450
HYC33-28	227	299	316	7	HY□-28-33	550
HYC33-33	277	299	316	7	HY□-33-33	710
HYC33-43	377	299	316	7	HY□-43-33	800

Clinching stud customization service available.

HYCL series L-bracket for HY • HYR • HYRH

HYCL dimensions

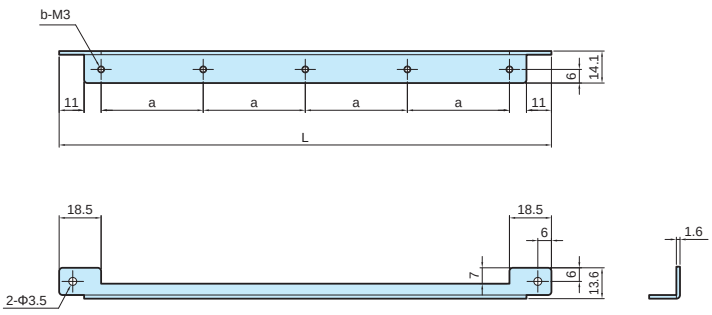

■ DXF/DWG/PDF/STP drawings available on our website.

■ Simple L-bracket and screw set.

■ Use with your original mounting plate or PCB.

Components

No.	Part name	Material	Color / Finish
1	L-bracket	Steel t=1.6	Trivalent chromate
2	Screw	Steel M3	Trivalent chromate

Product no. / Dimensions

Product no.	L	a	b	Pack of
HYCL-23	217	45	5	2
HYCL-33	316	46.5	7	2

HY series APPLICATION EXAMPLE

Complete Balanced Special Tuned DC Headphone Amplifier

Product by Sanyo Kasei (Japan)

Energy Creation Power Conditioner Development Kit

Product by Smart Energy Laboratory (Japan)

Linear Power Supply

Product by UpTone Audio (USA)

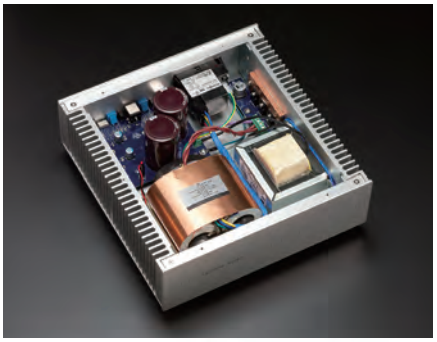

Industrial Fanless PC

Product by Techno Veins (Japan)

UC series UNIVERSAL ALUMINIUM CASE

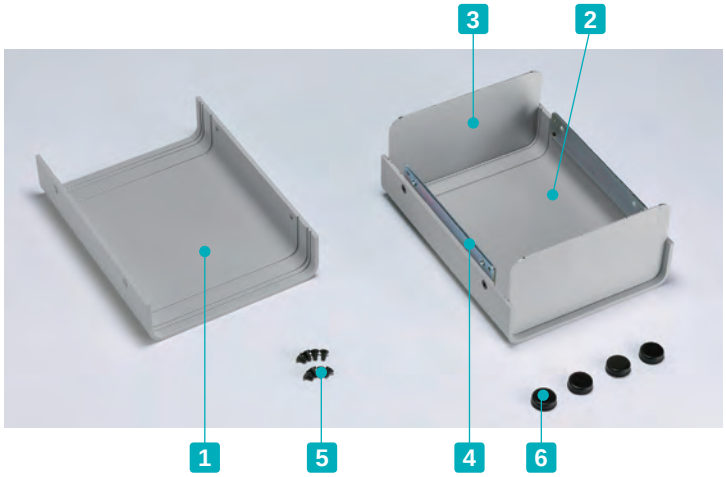

- Simple structure and tough case with extruded aluminium covers
- 36 sizes and 2 different colors for a total of 72 different combinations.
- 2 or 3 grooves available on top/bottom covers for adjusting front/rear panel positions or PCB insertion.
- Optional mounting plate, mounting bracket, panel retainer, and TORX screw are available.
- Custom length is available

Components

No.	Part name	Pcs	Material	Color / Finish
1	Top cover	1	Extruded aluminium A6063S-T5	Light gray • Black / Painted
2	Bottom cover	1	Extruded aluminium A6063S-T5	Light gray • Black / Painted
3	Panel	2	Aluminium A1100P t=1.5	Light gray • Black / Painted
4	Joint plate	2	Steel SPCC t=2.0	Trivalent chromate
5	Screw (M3 flat head)	12	Steel	Black trivalent chromate
6	Rubber feet	4	Synthetic rubber	Black

- Panels are covered with a protective film on one side.

Accessories (Optional parts)

Mounting plate UCC series
See page 261

Mounting bracket UCK-P series
See page 262

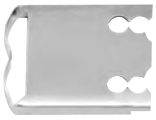

Panel retainer UCF-26
See page 262

TORX screw MR-1
See page 123

Aluminium isolation feet AFS • AFM series
See page 293 ~ 294

UC dimensions

■ DXF/DWG/PDF/STP drawings available on our website.

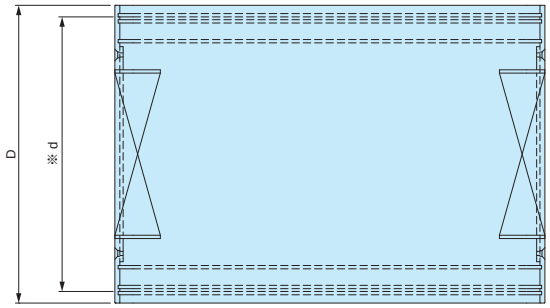

*d dimension varies depending on panel mount position. Dimensions listed are based on outermost mount position.

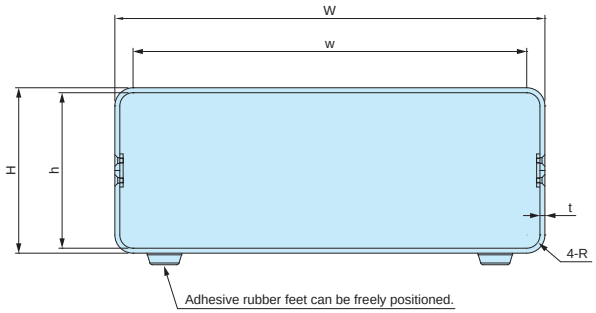

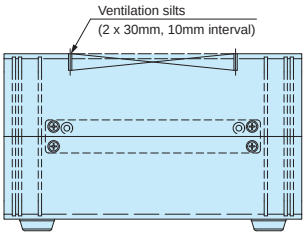

Color Type

● GG

Cover	Light gray
Panel	Light gray

● BB

Cover	Black
Panel	Black

Product no. / Dimensions

■ Please suffix color code at the end of the product number.
■ See below chart for ventilation slits availability.

Product no.	External dimensions			Internal dimensions			R	t	Ventilation slits	Weight (kg)
	W	H	D	w	h	d				
UC 6- 3- 8□	60	35	80	50	31	72	3	2	–	0.12
UC 7- 3-10□	75	30	100	65	26	92	3	2	–	0.16
UC 7- 8-14□	75	85	140	60	80	130	5	2.5	–	0.37
UC 8- 3- 6□	80	30	60	70	26	52	3	2	–	0.10
UC 9- 5-12□	90	50	120	75	45	112	5	2.5	–	0.29
UC10- 4-14□	100	40	140	85	35	130	5	2.5	–	0.32
UC10-11-18□	100	110	180	78	104	166	8	3	–	0.72
UC11- 3- 8□	110	30	80	100	26	72	3	2	–	0.17
UC11- 5- 8□	110	50	80	100	46	72	3	2	–	0.20
UC12- 7-16□	120	70	160	98	64	146	8	3	–	0.56
UC12-14-22□	120	140	220	98	134	206	8	3	○	1.08
UC13- 4-18□	130	40	180	108	34	166	8	3	–	0.56
UC14- 4-10□	140	40	100	130	36	92	3	2	–	0.27
UC14- 6-10□	140	60	100	130	56	92	3	2	–	0.31
UC15- 8-20□	150	80	200	128	74	186	8	3	○	0.86
UC15-10-12□	150	100	120	135	95	112	5	2.5	–	0.53
UC15-18-28□	150	180	280	128	174	266	8	3	○	1.74
UC16- 5-22□	165	50	220	143	44	206	8	3	○	0.84
UC17- 5-12□	170	50	120	155	45	112	5	2.5	–	0.45
UC17- 7-12□	170	70	120	155	65	112	5	2.5	–	0.51
UC18-10-24□	180	100	240	158	94	226	8	3	○	1.26
UC18-21-34□	180	210	340	157.6	203.6	326	8	3.2	○	2.63
UC20- 5-14□	200	50	140	185	45	130	5	2.5	–	0.56
UC20- 8-14□	200	80	140	185	75	130	5	2.5	–	0.67
UC20-12-16□	200	120	160	178	114	146	8	3	–	0.82
UC22-12-26□	220	120	260	198	114	246	8	3	○	1.70
UC24-14-34□	240	140	340	217.6	133.6	326	8	3.2	○	2.54
UC26- 5-18□	260	50	180	238	44	166	8	3	○	1.02
UC26- 7-20□	260	70	200	238	64	186	8	3	○	1.23
UC26-10-18□	260	100	180	238	94	166	8	3	○	1.26
UC32- 5-22□	320	50	220	298	44	206	8	3	○	1.45
UC32- 8-24□	320	80	240	298	74	226	8	3	○	1.76
UC32-12-22□	320	120	220	298	114	206	8	3	○	1.88
UC35-13-26□	350	130	260	328	124	246	8	3	○	2.45
UC43- 5-28□	430	50	280	408	44	266	8	3	○	2.37
UC43-14-28□	430	140	280	408	134	266	8	3	○	3.05

UCC series MOUNTING PLATE for UC

■ DXF/DWG/PDF drawings available on our website.

Type A

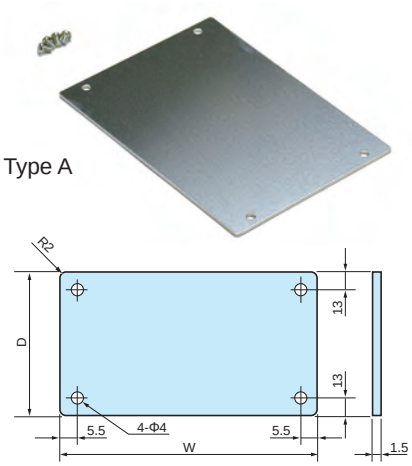

Type B

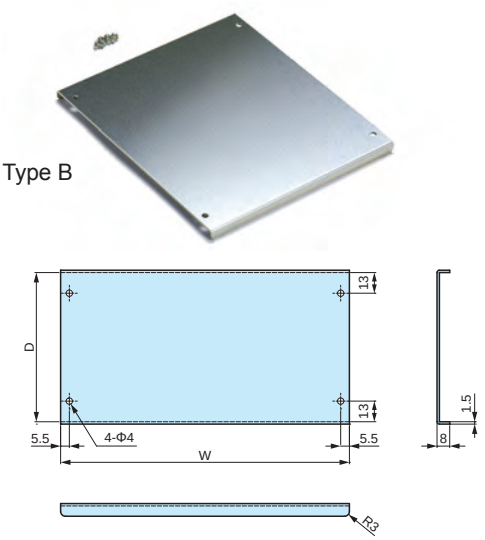

Type C

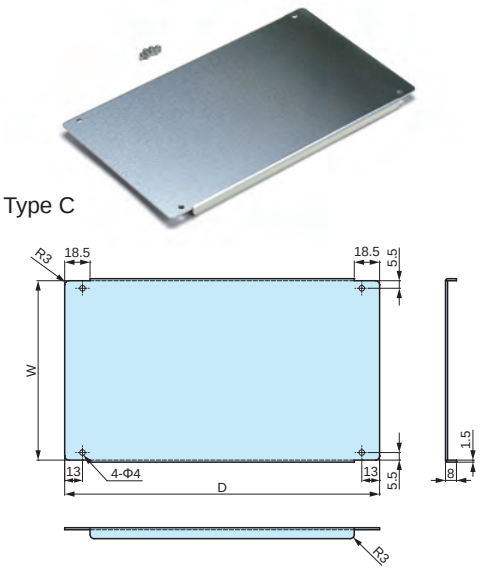

Components

Part name	Pcs	Material	Color / Finish
Mounting plate	1	Aluminium A1050P t=1.5	Unfinished
Screw	4	Steel M3-5	Trivalent chromate

Product no. / Dimensions (Type A)

Product no.	Suitable models	W	D
UCC 6- 8	UC 6- 3- 8	43	58
UCC 7-10	UC 7- 3-10	58	78
UCC 8- 6	UC 8- 3- 6	63	38
UCC11- 8	UC 11- 3- 8	93	58
	UC 11- 5- 8		
UCC 9-12	UC 9- 5-12	72	94
UCC10-14	UC 10- 4-14	82	94
UCC12-16	UC 12- 7-16	101	110
UCC13-18	UC 13- 4-18	111	130
UCC15-20	UC 15- 8-20	131	150
	UCG15- 9-20		
UCC14-10	UC 14- 4-10	123	78
	UC 14- 6-10		
UCC15-12	UC 15-10-12	132	94
UCC17-12	UC 17- 5-12	152	94
	UC 17- 7-12		
UCC 7-14	UC 7- 8-14	57	94
UCC10-18	UC 10-11-18	81	130
UCC12-22	UC 12-14-22	101	170

Product no. / Dimensions (Type B)

Product no.	Suitable models	W	D
UCC16-22	UC 16- 5-22	146	170
UCC18-24	UC 18-10-24	161	190
	UCG18-10-24		
UCC20-14	UC 20- 5-14	182	94
	UC 20- 8-14		
	UCG20- 9-14		
UCC22-26	UC 22-12-26	201	210
UCC20-16	UC 20-12-16	181	110
UCC26-18	UC 26- 5-18	241	130
	UC 26-10-18		
	UCG26-10-18		
UCC26-20	UC 26- 7-20	241	150
UCC32-22	UC 32- 5-22	301	170
	UC 32-12-22		
	UCG32-12-22		
UCC32-24	UC 32- 8-24	301	190
UCC35-26	UC 35-13-26	331	210
UCC43-28	UC 43- 5-28	411	230
	UC 43-14-28		

Product no. / Dimensions (Type C)

Product no.	Suitable models	W	D
UCC15-28	UC 15-18-28	131	230
UCC18-34	UC 18-21-34	160.6	290
UCC24-34	UC 24-14-34	220.6	290

UCK-P series MOUNTING BRACKET for UC

Components

Product name	Material	Finish	Pack of
Mounting bracket	Steel SPCC t=1.6	Trivalent chromate	4

Product no. / Dimensions

Product no.	Type	H1	C	C1	C2	Pack of
UCK-P 13	A	13	3	—	—	4
UCK-P 17	A	17	7	—	—	4
UCK-P 27	B	27	12	17	—	4
UCK-P 42	C	42	22	27	32	4
UCK-P 57	C	57	37	42	47	4
UCK-P 72	C	72	52	57	62	4
UCK-P 87	C	87	67	72	77	4
UCK-P102	C	102	82	87	92	4

■ DXF/DWG/PDF drawings available on our website.

UCK-P assembly drawings

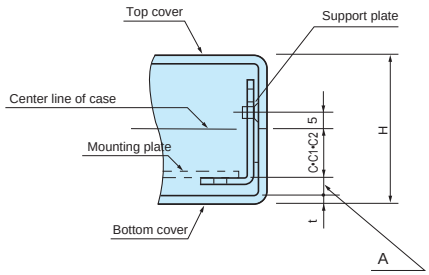

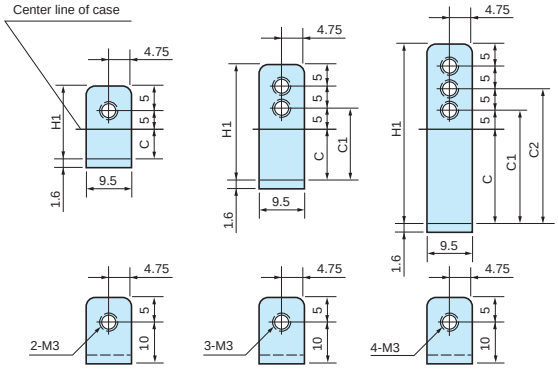

Type A Type B Type C

Bracket matching chart / A dimension

Product no.	Bracket no.	A		
UC 6- 3- 8	UCK-P 13	12.5		
	UCK-P 17	8.5		
UC 7- 3-10	UCK-P 13	10		
	UCK-P 17	6		
UC 9- 5-12	UCK-P 17	15.5		
	UCK-P 27	10.5	5.5	
UC 10- 4-14	UCK-P 13	14.5		
	UCK-P 17	10.5		
	UCK-P 27	5.5		
UC 12- 7-16	UCK-P 27	15		
	UCK-P 42	10		
UC 13- 4-18	UCK-P 13	14		
	UCK-P 17	10		
UC 15- 8-20	UCK-P 42	15	10	5
UC 16- 5-22	UCK-P 13	19		
	UCK-P 17	15		
	UCK-P 27	10		
UC 24-14-34	UCK-P 57	19.8		
	UCK-P 72	14.8	9.8	
UC 8- 3- 6	UCK-P 13	10		
	UCK-P 17	6		
UC 11- 3- 8	UCK-P 13	10		
	UCK-P 17	6		
UC 11- 5- 8	UCK-P 17	16		
	UCK-P 27	11	6	

Product no.	Bracket no.	A		
UC 14- 4-10	UCK-P 13	15		
	UCK-P 17	11		
	UCK-P 27	6		
UC 14- 6-10	UCK-P 27	16	11	
	UCK-P 42	6		
UC 15- 9-20	UCK-P 42	10		
	UCK-P 57			
UC 15-10-12	UCK-P 42	20.5	15.5	
	UCK-P 57	10.5	5.5	
UC 17- 5-12	UCK-P 17	15.5		
	UCK-P 27	10.5	5.5	
UC 17- 7-12	UCK-P 27	15.5		
	UCK-P 42	10.5	5.5	
UC 20- 5-14	UCK-P 13	19.5		
	UCK-P 17	15.5		
	UCK-P 27	10.5	5.5	
UC 20- 8-14	UCK-P 27	20.5		
	UCK-P 42	15.5	10.5	
UCG 20- 9-14	UCK-P 42	5		
	UCK-P 57			
UC 20-12-16	UCK-P 57	20	15	10
UC 26- 5-18	UCK-P 13	19		
	UCK-P 17	15		
	UCK-P 27	10		

Product no.	Bracket no.	A		
UC 26-10-18	UCK-P 42	20	15	
UCG 26-10-18	UCK-P 57	10		
UCG 26- 7-20	UCK-P 27	15		
	UCK-P 42	10		
UC 18-10-24	UCK-P 42	20	15	
UCG 18-10-24	UCK-P 57	10		
UC 22-12-26	UCK-P 57	20	15	10
UC 32- 5-22	UCK-P 13	19		
	UCK-P 17	15		
	UCK-P 27	10		
UC 32-12-22 UCG 32-12-22	UCK-P 57	20	15	10
UC 32- 8-24	UCK-P 42	15	10	5
UC 35-13-26	UCK-P 57	25	20	15
	UCK-P 72	10	5	
UC 43- 5-28	UCK-P 13	19		
	UCK-P 17	15		
	UCK-P 27	10		
UC 43-14-28	UCK-P 57	20		
	UCK-P 72	15	10	
UC 7- 8-14	UCK-P 42	18	13	8
UC 10-11-18	UCK-P 57	15	10	5
UC 12-14-22	UCK-P 72	15	10	5
UC 15-18-28	UCK-P 87	20	15	10
UC 18-21-34	UCK-P102	19.8	14.8	9.8

UCF-26 PANEL RETAINER for UC

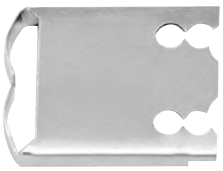

UCF-26 drawings

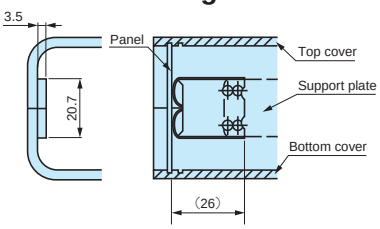

■ DXF/DWG/PDF drawings available on our website.

Product no.

Product no.	Material	Finish	Pack of
UCF-26	Stainless steel t=0.3	Unfinished	2

■ Not applicable for use on 60, 80, 100 and 120 "D" dimension cases.

UCG series UNIVERSAL ALUMINIUM CASE with CORNER GUARD

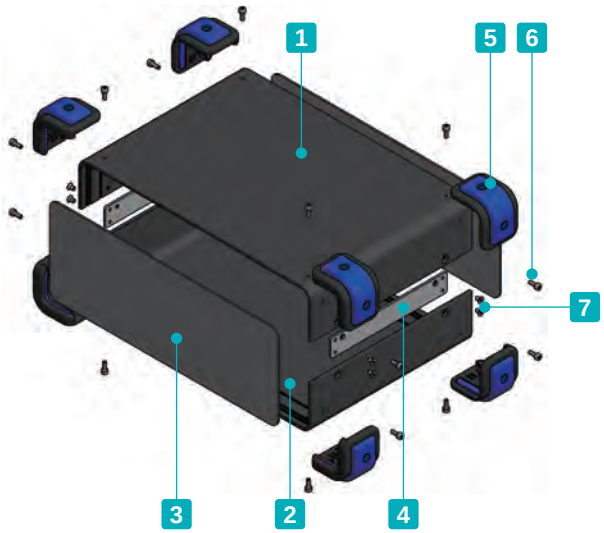

- Aluminium case equipped with shockproof and anti-slip corner guards.
- Available in 8 sizes and 5 different corner guard color variations.
- Custom sizes available.

Included screws
Corner guard screw - M3-8 Hexagonal x 16 pcs
Case screw - M3 Hexagonal flat head x 12 pcs
※2 Hexagonal wrenches included.
(The larger for corner guard screw, the smaller for case screw)

Components

No.	Part name	Pcs	Material	Color / Finish
1	Top cover	1	Extruded aluminium A6063S-T5	Black / Painted
2	Bottom cover	1	Extruded aluminium A6063S-T5	Black / Painted
3	Panel	2	Aluminium A1100P t=1.5	Black / Painted
4	Joint plate	2	Steel SPCC t=2.0	Trivalent chromate
5	Corner guard	8	PP + Silicone	Black • Emerald • Gray • Navy • Red
6	Corner guard screw	16	Steel	Trivalent chromate
7	Case screw	12	Steel	Trivalent chromate

- Panels are covered with a protective film on one side.

Color Type

Code	BB Black / Black	BE Black / Emerald	BG Black / Gray	BN Black / Navy	BR Black / Red
Color					

UCG dimensions

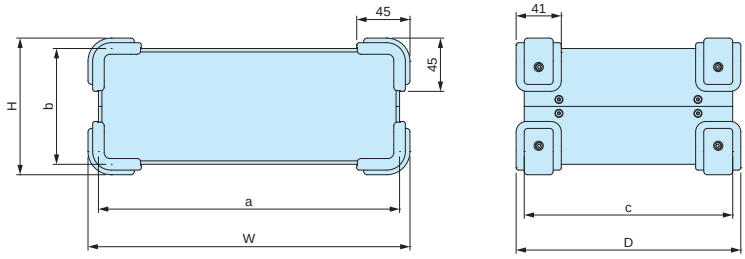

■ DXF/DWG/PDF/STP drawings available on our website.

Accessories (Optional parts)

Mounting plate UCC series
See page 261

Elastomer handle FM200 series
See website

Product no. / Dimensions

■ Please suffix color code at the end of the product number.

Product no.	W	H	D	a	b	c	Standard Compatible Mounting Plate	Weight (kg)
UCG15- 9-20□□	168	108	214	150	90	200	YES	1.14
UCG18-10-24□□	198	118	254	180	100	240	YES	1.44
UCG18-18-28□□	198	198	294	180	180	280	N/A	2.23
UCG20- 9-14□□	218	108	154	200	90	140	YES	1.13
UCG22-12-16□□	238	138	174	220	120	160	N/A	1.28
UCG26-10-18□□	278	118	194	260	100	180	YES	1.96
UCG32-12-22□□	338	138	234	320	120	220	YES	2.13
UCG38-15-26□□	398	168	274	380	150	260	N/A	3.19

■ Mounting plate can be custom ordered.

Accessories (Optional parts)

UG-1 CORNER GUARD for UC • UCG

Application example

- Corner guard parts for UC • UCG series.
- M3 thread holes are required in order to fix on UC series.
- Available in 5 different color variations.

UG-1 dimensions

■ DXF/DWG/PDF/STP drawings available on our website.

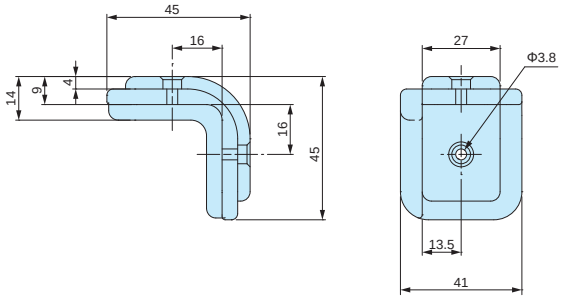

Components

No.	Part name	Material
1	Corner guard base	PP
2	Corner guard	Silicone
3	Screw (M3-8 Hexagonal)	Steel

Product no. / Details

Product no.					Weight (g)	Pack of
● Black	● Emerald	● Gray	● Navy	● Red		
UG-1B	UG-1E	UG-1G	UG-1N	UG-1R	210.5	8

Included screw : M3-8 Hexagonal : Steel : Trivalent chromate x 16 pcs + 2 Hexagonal wrench

MCG series ALUMINIUM CASE with CORNER GUARD

Conductive

- Aluminium case equipped with shockproof and anti-slip elastomer corner guards.
- Suitable to be used as a fanless PC, power supply, power storage device etc.
  Carrying handle can withstand a maximum load up to 30.0 kg.
- Corner guards are available in 4 different color variations.
- Custom sizes available.

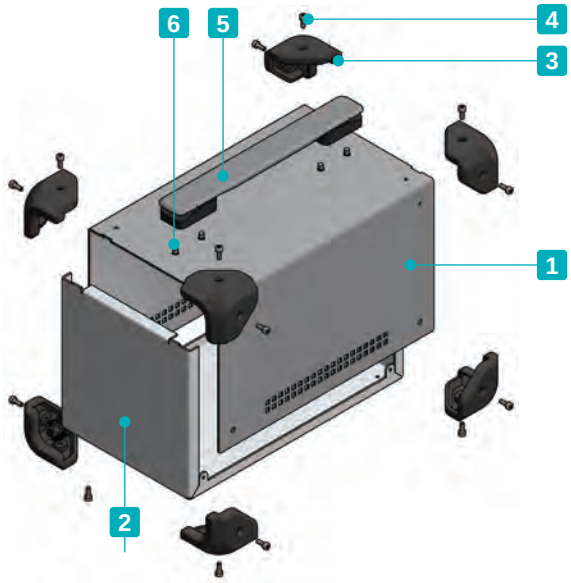

- Aluminium case and corner guard with screw fastening.

Included screws
Case / Corner guard - M4-8 Hexagonal x 16 or 18 pcs
Carrying handle - M5-8 x 4 pcs
※Hexagonal wrench included.

Components

No.	Part name	Pcs	Material	Color / Finish
1	Top cover	1	Steel SECC t=10	Black / Painted
			Aluminium A1100P t=1.5	Metallic silver / Painted (Conductive inside)
2	Base	1	Aluminium A1050P t=1.5	Black / Painted
			Aluminium A1100P t=1.5	Metallic silver / Painted (Conductive inside)
3	Corner guard	8	TPE	Black • Gray • Navy • Red
4	Case / Corner guard screw	16 / 18	Steel	Black trivalent chromate
5	Carrying handle	1	PU • PA6 • ABS • Steel	Black • Gray
6	Carrying handle screw	4	Steel	Trivalent chromate

- Top cover and base are covered with a protective film on one side.

Color Type

Code	BB Black / Black	BG Black / Gray	BN Black / Navy	BR Black / Red
Color				
Code	SB Silver / Black Conductive	SG Silver / Gray Conductive	SN Silver / Navy Conductive	SR Silver / Red Conductive
Color				

MCG dimensions

■ DXF/DWG/PDF/STP drawings available on our website.

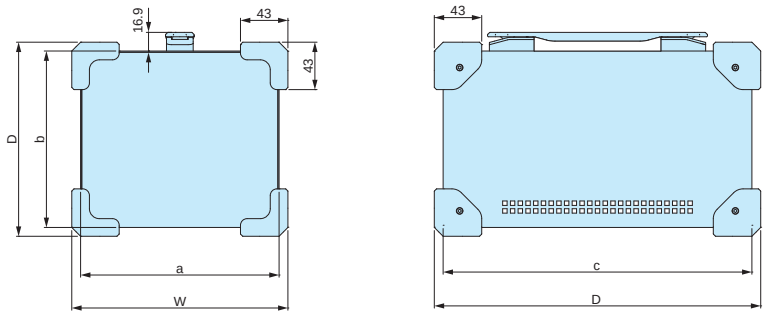

Product no. / Dimensions

■ Please suffix color code at the end of the product number.

Product no.	W	H	D	a	b	c	Weight (kg)	
							B□ models	S□ models
MCG14-14-23□□	156	156	246	140	140	230	1.2	0.9
MCG18-16-28□□	196	176	296	180	160	280	1.8	1.3
MCG21-14-24□□	226	156	256	210	140	240	1.6	1.2
MCG26-18-30□□	276	196	316	260	180	300	2.3	1.6

Accessories (Optional parts)

MG-1 CORNER GUARD

MG-1 dimensions

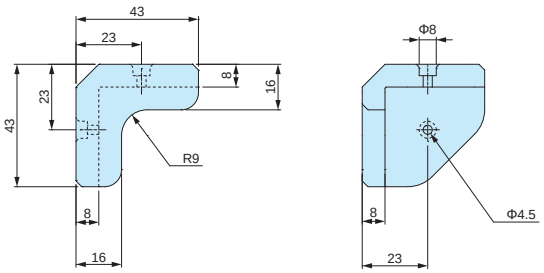

■ DXF/DWG/PDF/STP drawings available on our website.

- Corner guard part for MCG case.
- Corner guard can be installed on enclosures other than MCG series.
- M4 thread holes are required for installation.
- Available in 4 different color variations.

Components

No.	Part name	Material
1	Corner guard	TPE
2	Screw (M4-8 Hexagonal)	Steel

Product no. / Details

Product no.				Weight (g)	Pack of
● Black	● Gray	● Navy	● Red		
MG-1B	MG-1G	MG-1N	MG-1R	124	8

Included screw : M4-8 Hexagonal : Steel : Black trivalent chromate x 18 pcs + Hexagonal wrench

FC series ALUMINIUM CONTROL BOX

FC and FCW series are applicable for various purposes such as control and switch box, touch panel display, monitor box, and so on.

APPLICATION EXAMPLE

Ultrasonic Flaw Detector

Product by NOVOTEST (Ukraine)

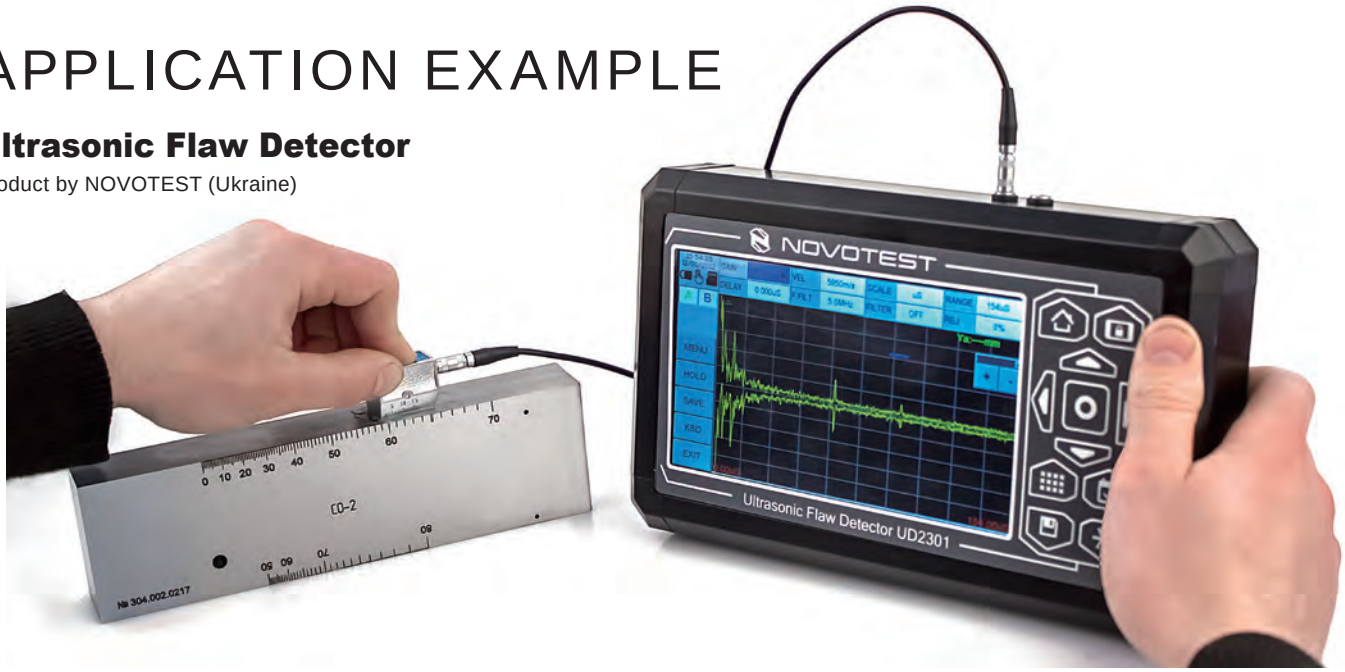

Coil Winding Machine

Product by TNK (Japan)

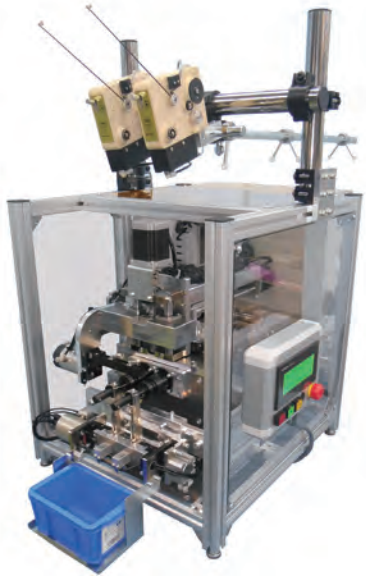

Remote Control Logger

Product by FIELD TECH (Japan)

Streaming Video Provider

Product by StreamingVideoProvider (USA)

Linux Data Logger

Product by NESA (Italy)

Solar Monitoring System

Product by TOKAI EC (Japan)

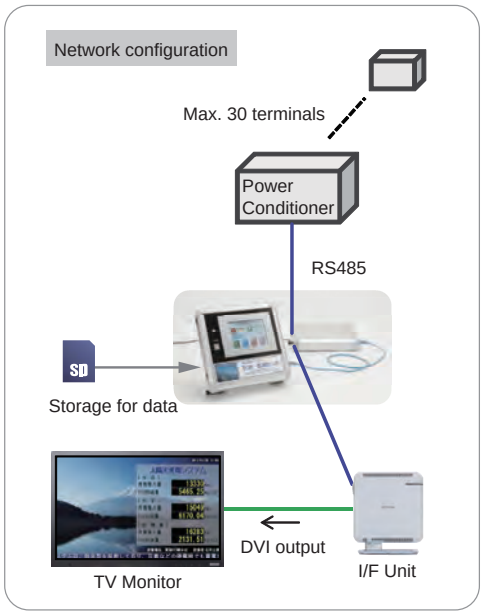

4 Channel Edge Node

Product by SHINWA (Japan)

Active RFID Tag Reader • Trigger

Product by Matrix (Japan)

Hands-free type

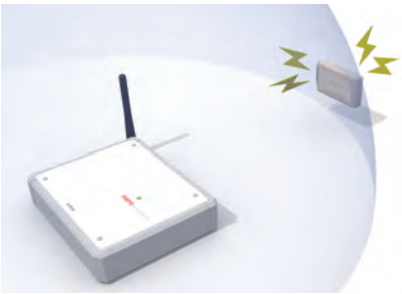

Touch type

Compact Solar Power Supply

Product by Elenagic (Japan)

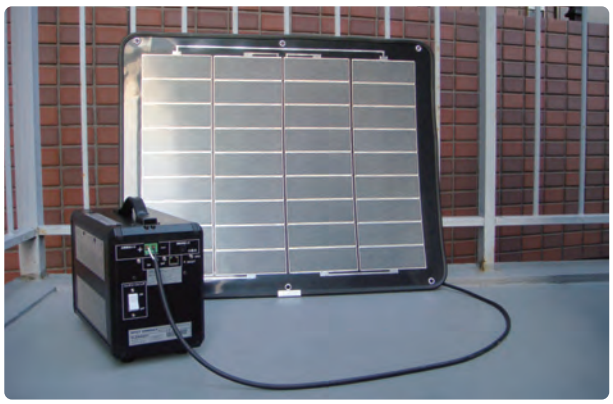

FC series ALUMINIUM CONTROL BOX

Technical Data
Protection class: IP40

- 175 different sizes in 4 different color variations available.
- Simple designed aluminium utility box composed of extruded aluminium frames, aluminium panels and ABS corner joints.
- Suitable for touch panel display, industrial control equipment, and various other devices.

Custom width / length available in 1mm intervals

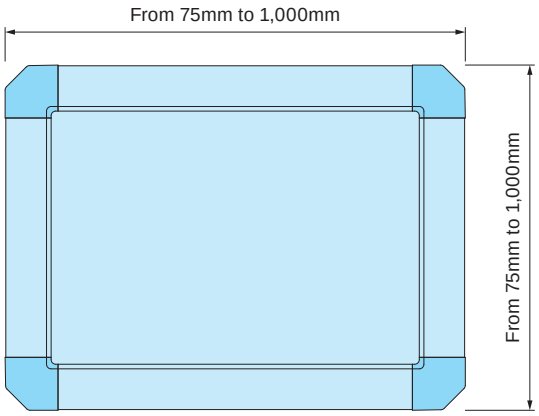

- Flexible frame width / length from 75mm to 1,000mm in 1mm intervals.
- No minimum order quantity and short lead time for small quantity order.

Assembly drawings

■ DXF/DWG/PDF/STP drawings available on our website.

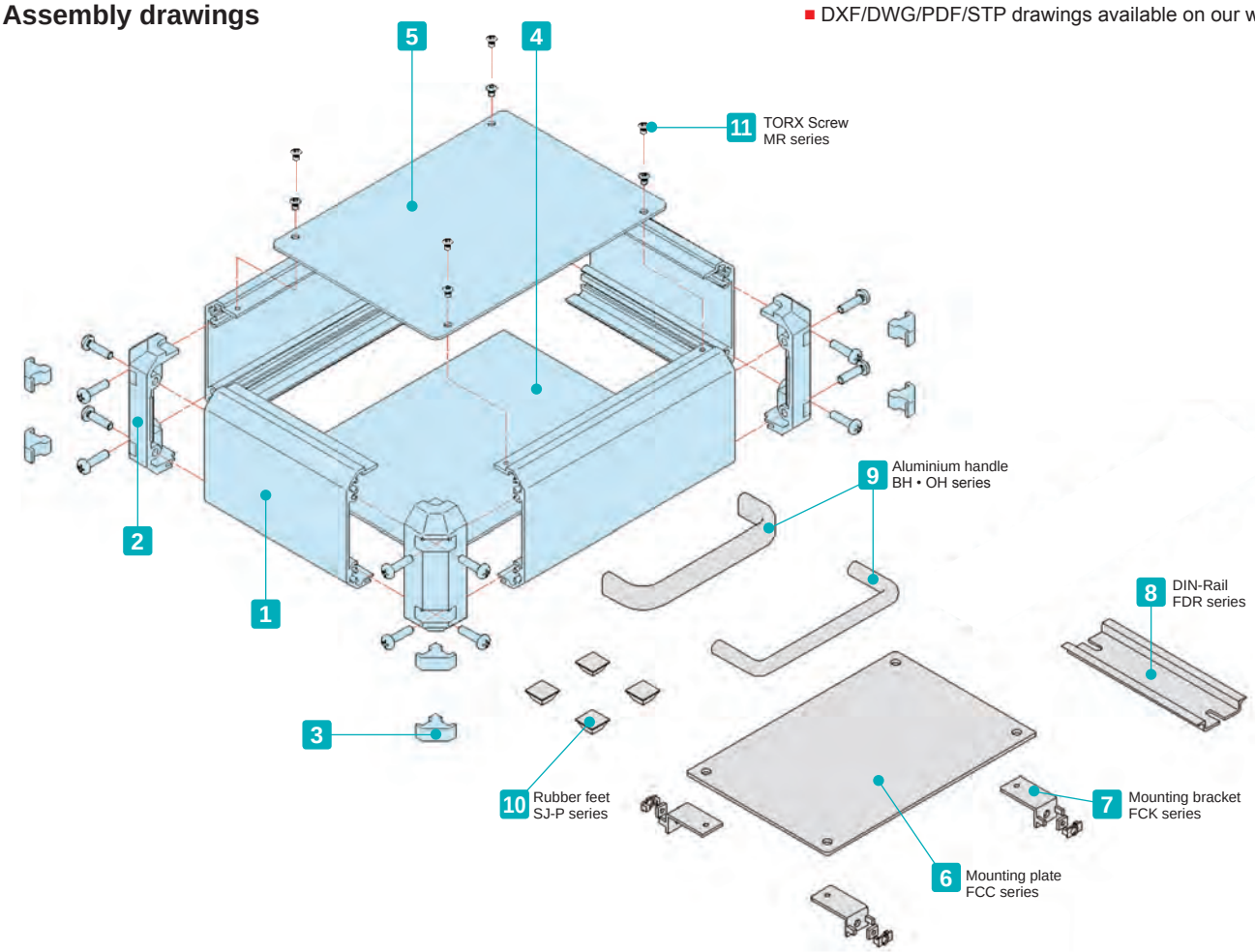

Included screws
M4-15 pan head & Trivalent chromate x 16 pcs
(M3-15 for FC4 models)
M3-5 original trapezoid head (plus) & Nickel plated / Black trivalent chromate x 8 pcs

Components

No.	Part name	Pcs	Material	Color / Finish
1	Frame	4	Extruded aluminium A6063S-T5	Silver • Black / Anodized with clear coating
2	Corner block	4	ABS UL94HB	Light gray • Black
3	Blind plug	8	Elastomer	Light gray • Black
4	Slide panel	1	Aluminium A1100P	Silver / Anodized • Black / Painted
5	Screwed panel	1	Aluminium A1100P	Silver / Anodized • Black / Painted

■ Panels are covered with a protective film on one side.

Accessories (Optional parts)

6 Mounting plate FCC series
See page 281 ~ 282

7 Mounting bracket FCK series
See page 282

8 DIN-Rail FDR series
See website

9 Aluminium handle BH • OH series
See website

10 Rubber feet SJ-P series
See page 296

11 TORX screw MR3-5Z
See website

Wall mount support arm MAR series
See page 181 ~ 182

FC dimensions

■ DXF/DWG/PDF/STP drawings available on our website.

FC4 models

■ Refer to page 273 ~ 274 for enclosure dimensions.

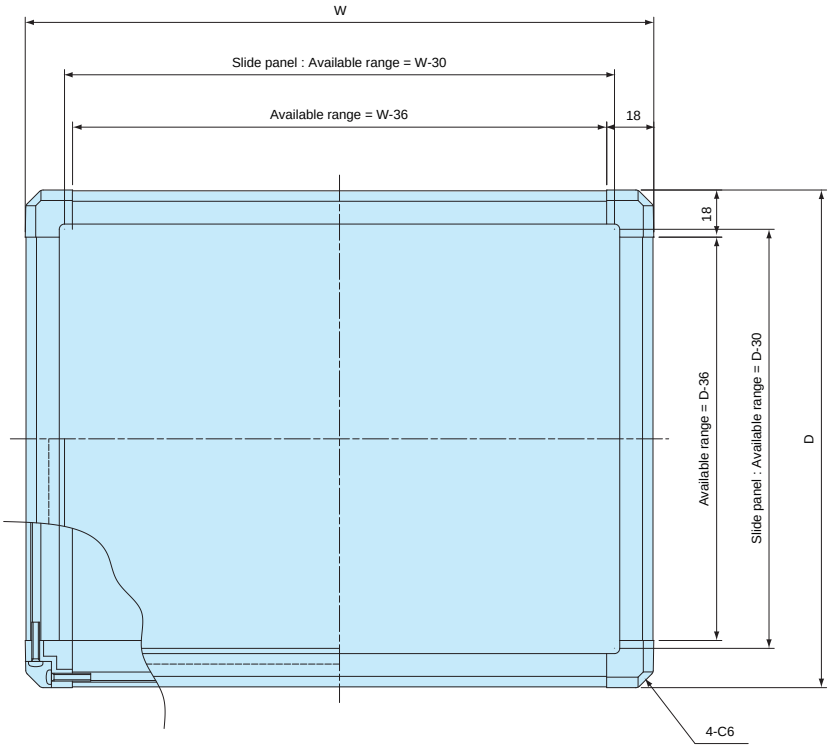

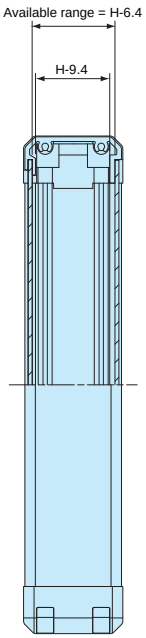

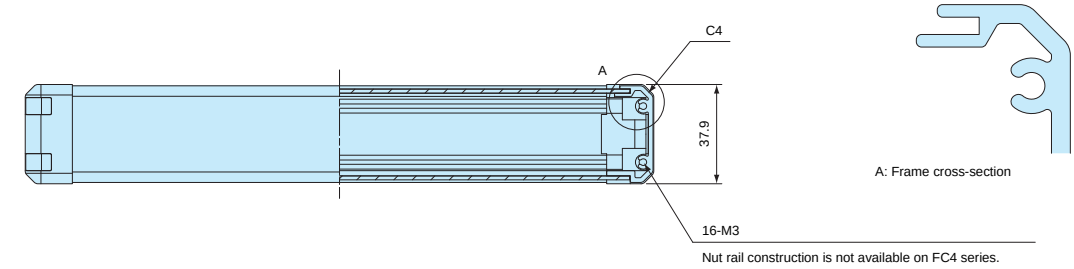

Nut rail construction is not available on FC4 series.

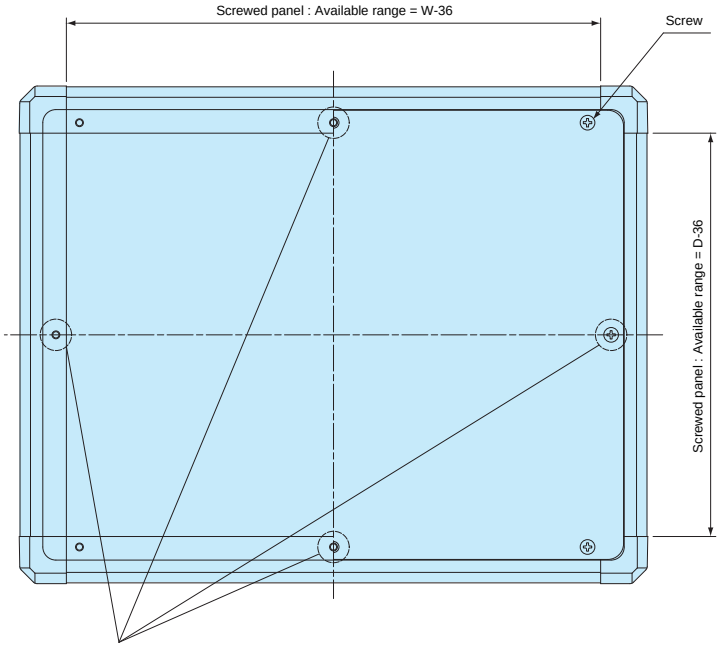

※Additional screw holes if W or D is over 390mm.

FC5 • FC6 • FC8 • FC10 • FC13 • FC15 models

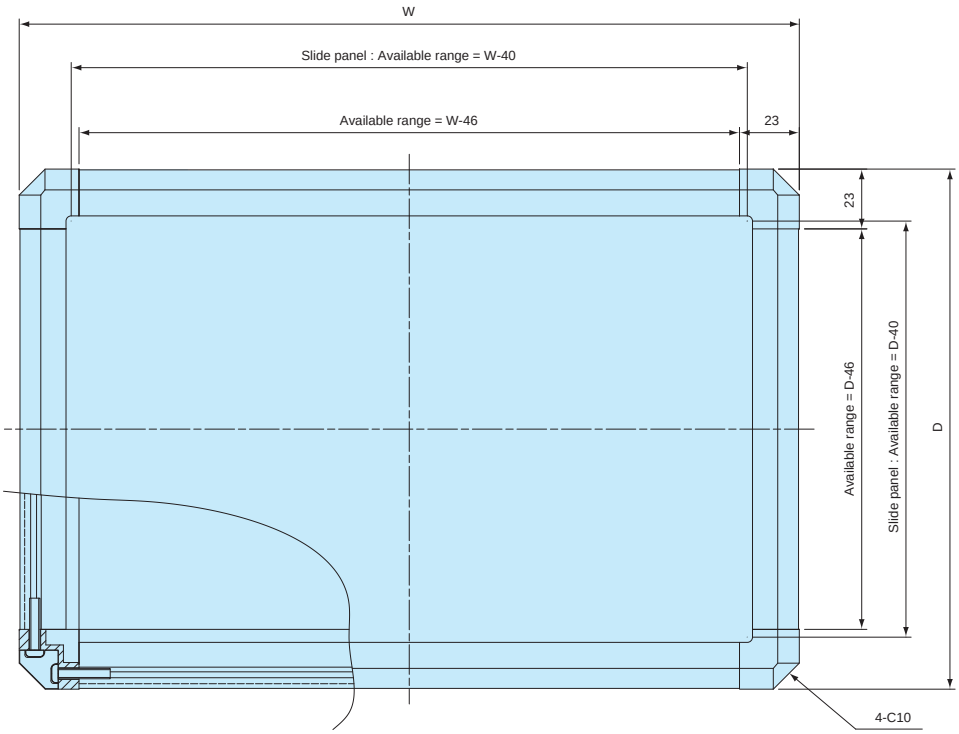

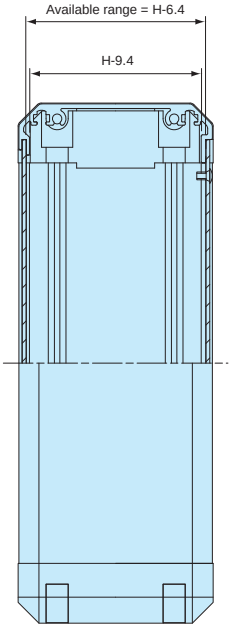

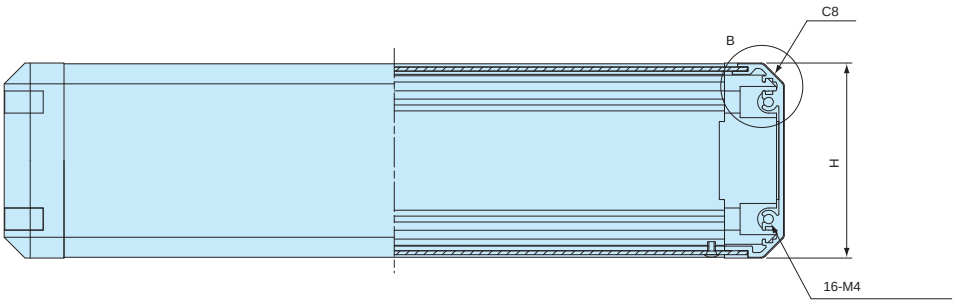

Nut rail construction

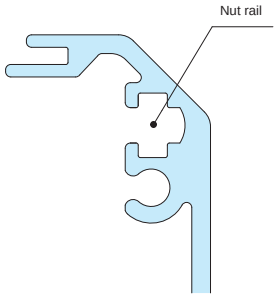

A: Frame cross-section

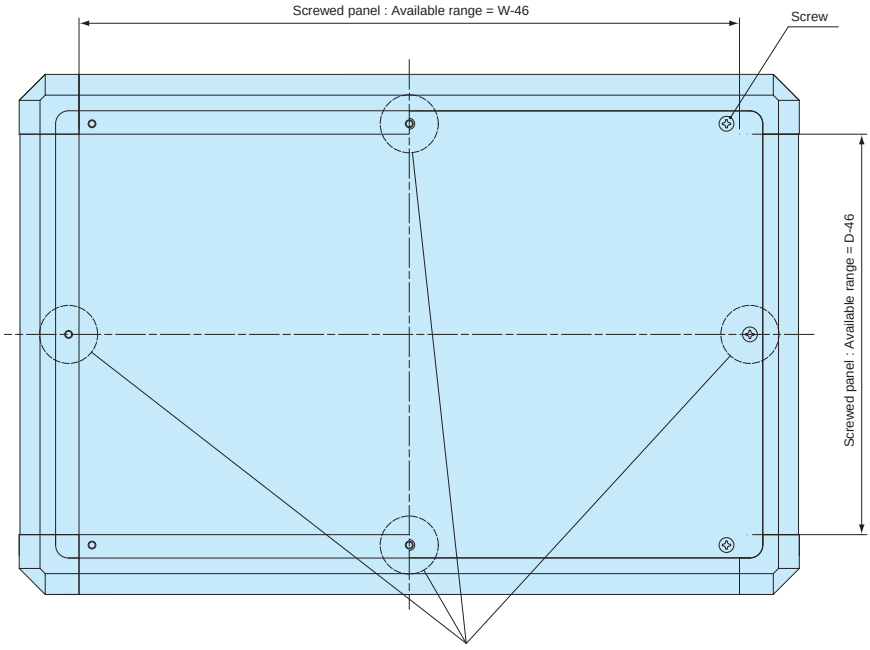

※Additional screw holes if W or D is over 400mm.

Color Type

GS		BS		BX		BB	
Panel	Silver	Panel	Silver	Panel	Silver	Panel	Black
Frame	Silver	Frame	Silver	Frame	Black	Frame	Black
Corner	Light gray	Corner	Black	Corner	Black	Corner	Black

Product no. / Dimensions

■ Please suffix color code at the end of the product number.

Product no.	H	W	D	Weight (kg)	Panel mount screw pcs
FC4- 9- 9□□	37.9	90	90	0.17	4
FC4-14- 9□□	37.9	140	90	0.24	4
FC4-14-14□□	37.9	140	140	0.33	4
FC4-19- 9□□	37.9	190	90	0.31	4
FC4-19-14□□	37.9	190	140	0.50	4
FC4-19-19□□	37.9	190	190	0.53	4
FC4-24-14□□	37.9	240	140	0.51	4
FC4-24-19□□	37.9	240	190	0.64	4
FC4-24-24□□	37.9	240	240	0.78	4
FC4-29-14□□	37.9	290	140	0.60	4
FC4-29-19□□	37.9	290	190	0.75	4
FC4-29-24□□	37.9	290	240	0.91	4
FC4-29-29□□	37.9	290	290	1.07	4
FC4-34-19□□	37.9	340	190	0.87	4
FC4-34-24□□	37.9	340	240	1.04	4
FC4-34-29□□	37.9	340	290	0.94	4
FC4-39-19□□	37.9	390	190	0.97	6
FC4-39-24□□	37.9	390	240	1.17	6
FC4-39-29□□	37.9	390	290	1.37	6
FC4-39-39□□	37.9	390	390	1.77	8
FC4-49-24□□	37.9	490	240	1.39	6
FC4-49-29□□	37.9	490	290	1.64	6
FC4-49-39□□	37.9	490	390	2.12	8
FC4-59-29□□	37.9	590	290	1.92	6
FC4-59-39□□	37.9	590	390	2.46	8
FC5-10-10□□	50.4	100	100	0.24	4
FC5-15-10□□	50.4	150	100	0.33	4
FC5-15-15□□	50.4	150	150	0.44	4
FC5-20-10□□	50.4	200	100	0.42	4
FC5-20-15□□	50.4	200	150	0.55	4
FC5-20-20□□	50.4	200	200	0.68	4
FC5-25-15□□	50.4	250	150	0.66	4
FC5-25-20□□	50.4	250	200	0.81	4
FC5-25-25□□	50.4	250	250	0.97	4
FC5-30-15□□	50.4	300	150	0.77	4
FC5-30-20□□	50.4	300	200	0.94	4
FC5-30-25□□	50.4	300	250	1.11	4
FC5-30-30□□	50.4	300	300	1.29	4
FC5-35-20□□	50.4	350	200	1.07	4
FC5-35-25□□	50.4	350	250	1.26	4
FC5-35-30□□	50.4	350	300	1.46	4
FC5-40-20□□	50.4	400	200	1.20	6
FC5-40-25□□	50.4	400	250	1.42	6
FC5-40-30□□	50.4	400	300	1.64	6

Product no.	H	W	D	Weight (kg)	Panel mount screw pcs
FC5-40-40□□	50.4	400	400	2.07	8
FC5-50-25□□	50.4	500	250	1.66	6
FC5-50-30□□	50.4	500	300	1.92	6
FC5-50-40□□	50.4	500	400	2.44	8
FC5-60-30□□	50.4	600	300	2.22	6
FC5-60-40□□	50.4	600	400	2.81	8
FC6-10-10□□	62.9	100	100	0.26	4
FC6-15-10□□	62.9	150	100	0.35	4
FC6-15-15□□	62.9	150	150	0.47	4
FC6-20-10□□	62.9	200	100	0.45	4
FC6-20-15□□	62.9	200	150	0.58	4
FC6-20-20□□	62.9	200	200	0.72	4
FC6-25-15□□	62.9	250	150	0.70	4
FC6-25-20□□	62.9	250	200	0.85	4
FC6-25-25□□	62.9	250	250	1.01	4
FC6-30-15□□	62.9	300	150	0.81	4
FC6-30-20□□	62.9	300	200	0.99	4
FC6-30-25□□	62.9	300	250	1.16	4
FC6-30-30□□	62.9	300	300	1.35	4
FC6-35-20□□	62.9	350	200	1.12	4
FC6-35-25□□	62.9	350	250	1.32	4
FC6-35-30□□	62.9	350	300	1.52	4
FC6-40-20□□	62.9	400	200	1.25	6
FC6-40-25□□	62.9	400	250	1.47	6
FC6-40-30□□	62.9	400	300	1.70	6
FC6-40-40□□	62.9	400	400	2.15	8
FC6-50-25□□	62.9	500	250	1.72	6
FC6-50-30□□	62.9	500	300	1.99	6
FC6-50-40□□	62.9	500	400	2.52	8
FC6-60-30□□	62.9	600	300	2.29	6
FC6-60-40□□	62.9	600	400	2.43	8
FC8-10-10□□	75.4	100	100	0.28	4
FC8-15-10□□	75.4	150	100	0.38	4
FC8-15-15□□	75.4	150	150	0.50	4
FC8-20-10□□	75.4	200	100	0.48	4
FC8-20-15□□	75.4	200	150	0.62	4
FC8-20-20□□	75.4	200	200	0.76	4
FC8-25-15□□	75.4	250	150	0.74	4
FC8-25-20□□	75.4	250	200	0.90	4
FC8-25-25□□	75.4	250	250	1.07	4
FC8-30-15□□	75.4	300	150	0.86	4
FC8-30-20□□	75.4	300	200	1.04	4
FC8-30-25□□	75.4	300	250	1.23	4
FC8-30-30□□	75.4	300	300	1.42	4

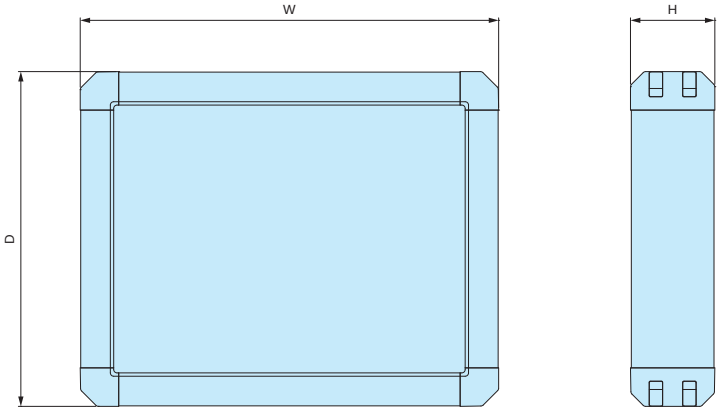

Product no.	H	W	D	Weight (kg)	Panel mount screw pcs
FC 8-35-20□□	75.4	350	200	1.19	4
FC 8-35-25□□	75.4	350	250	1.39	4
FC 8-35-30□□	75.4	350	300	1.51	4
FC 8-40-20□□	75.4	400	200	1.32	6
FC 8-40-25□□	75.4	400	250	1.46	6
FC 8-40-30□□	75.4	400	300	1.78	6
FC 8-40-40□□	75.4	400	400	2.24	8
FC 8-50-25□□	75.4	500	250	1.81	6
FC 8-50-30□□	75.4	500	300	2.08	6
FC 8-50-40□□	75.4	500	400	2.62	8
FC 8-60-30□□	75.4	600	300	2.39	6
FC 8-60-40□□	75.4	600	400	3.00	8
FC10-10-10□□	100.4	100	100	0.31	4
FC10-15-10□□	100.4	150	100	0.43	4
FC10-15-15□□	100.4	150	150	0.56	4
FC10-20-10□□	100.4	200	100	0.54	4
FC10-20-15□□	100.4	200	150	0.70	4
FC10-20-20□□	100.4	200	200	0.85	4
FC10-25-15□□	100.4	250	150	0.83	4
FC10-25-20□□	100.4	250	200	1.01	4
FC10-25-25□□	100.4	250	250	1.19	4
FC10-30-15□□	100.4	300	150	0.97	4
FC10-30-20□□	100.4	300	200	1.16	4
FC10-30-25□□	100.4	300	250	1.36	4
FC10-30-30□□	100.4	300	300	1.57	4
FC10-35-20□□	100.4	350	200	1.32	4
FC10-35-25□□	100.4	350	250	1.54	4
FC10-35-30□□	100.4	350	300	1.77	4
FC10-40-20□□	100.4	400	200	1.47	6
FC10-40-25□□	100.4	400	250	1.72	6
FC10-40-30□□	100.4	400	300	1.96	6
FC10-40-40□□	100.4	400	400	2.45	8
FC10-50-25□□	100.4	500	250	1.99	6
FC10-50-30□□	100.4	500	300	2.27	6
FC10-50-40□□	100.4	500	400	2.84	8
FC10-60-30□□	100.4	600	300	2.60	6
FC10-60-40□□	100.4	600	400	2.70	8
FC13-10-10□□	125.4	100	100	0.35	4
FC13-15-10□□	125.4	150	100	0.47	4
FC13-15-15□□	125.4	150	150	0.61	4
FC13-20-10□□	125.4	200	100	0.59	4
FC13-20-15□□	125.4	200	150	0.75	4
FC13-20-20□□	125.4	200	200	0.92	4
FC13-25-15□□	125.4	250	150	0.90	4

Product no.	H	W	D	Weight (kg)	Panel mount screw pcs
FC13-25-20□□	125.4	250	200	1.08	4
FC13-25-25□□	125.4	250	250	1.27	4
FC13-30-15□□	125.4	300	150	1.04	4
FC13-30-20□□	125.4	300	200	1.24	4
FC13-30-25□□	125.4	300	250	1.44	4
FC13-30-30□□	125.4	300	300	1.66	4
FC13-35-20□□	125.4	350	200	1.40	4
FC13-35-25□□	125.4	350	250	1.63	4
FC13-35-30□□	125.4	350	300	1.86	4
FC13-40-20□□	125.4	400	200	1.56	6
FC13-40-25□□	125.4	400	250	1.81	6
FC13-40-30□□	125.4	400	300	2.06	6
FC13-40-40□□	125.4	400	400	2.56	8
FC13-50-25□□	125.4	500	250	2.09	6
FC13-50-30□□	125.4	500	300	2.38	6
FC13-50-40□□	125.4	500	400	2.96	8
FC13-60-30□□	125.4	600	300	2.89	6
FC13-60-40□□	125.4	600	400	3.36	8
FC15-10-10□□	150.4	100	100	0.40	4
FC15-15-10□□	150.4	150	100	0.54	4
FC15-15-15□□	150.4	150	150	0.70	4
FC15-20-10□□	150.4	200	100	0.68	4
FC15-20-15□□	150.4	200	150	0.85	4
FC15-20-20□□	150.4	200	200	1.04	4
FC15-25-15□□	150.4	250	150	1.02	4
FC15-25-20□□	150.4	250	200	1.22	4
FC15-25-25□□	150.4	250	250	1.42	4
FC15-30-15□□	150.4	300	150	1.17	4
FC15-30-20□□	150.4	300	200	1.40	4
FC15-30-25□□	150.4	300	250	1.62	4
FC15-30-30□□	150.4	300	300	1.85	4
FC15-35-20□□	150.4	350	200	1.58	4
FC15-35-25□□	150.4	350	250	1.82	4
FC15-35-30□□	150.4	350	300	2.07	4
FC15-40-20□□	150.4	400	200	1.76	6
FC15-40-25□□	150.4	400	250	2.02	6
FC15-40-30□□	150.4	400	300	2.29	6
FC15-40-40□□	150.4	400	400	2.83	8
FC15-50-25□□	150.4	500	250	2.32	6
FC15-50-30□□	150.4	500	300	2.63	6
FC15-50-40□□	150.4	500	400	3.25	8
FC15-60-30□□	150.4	600	300	2.98	6
FC15-60-40□□	150.4	600	400	3.66	8

FCW series OPEN-CLOSING CONTROL BOX

- 108 different sizes in 2 different color variations available.
- Easy access to the inside of the case with opening/closing cover.
- Both with and without key lock types are available.
- Suitable for touch panel display, industrial control equipment and many others.

Custom width / length available

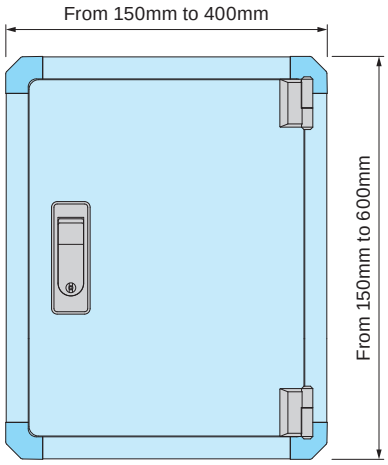

- Flexible frame width / length in 1mm intervals.
- No minimum order quantity and short lead time for small quantity order.

Assembly drawings

■ DXF/DWG/PDF/STP drawings available on our website.

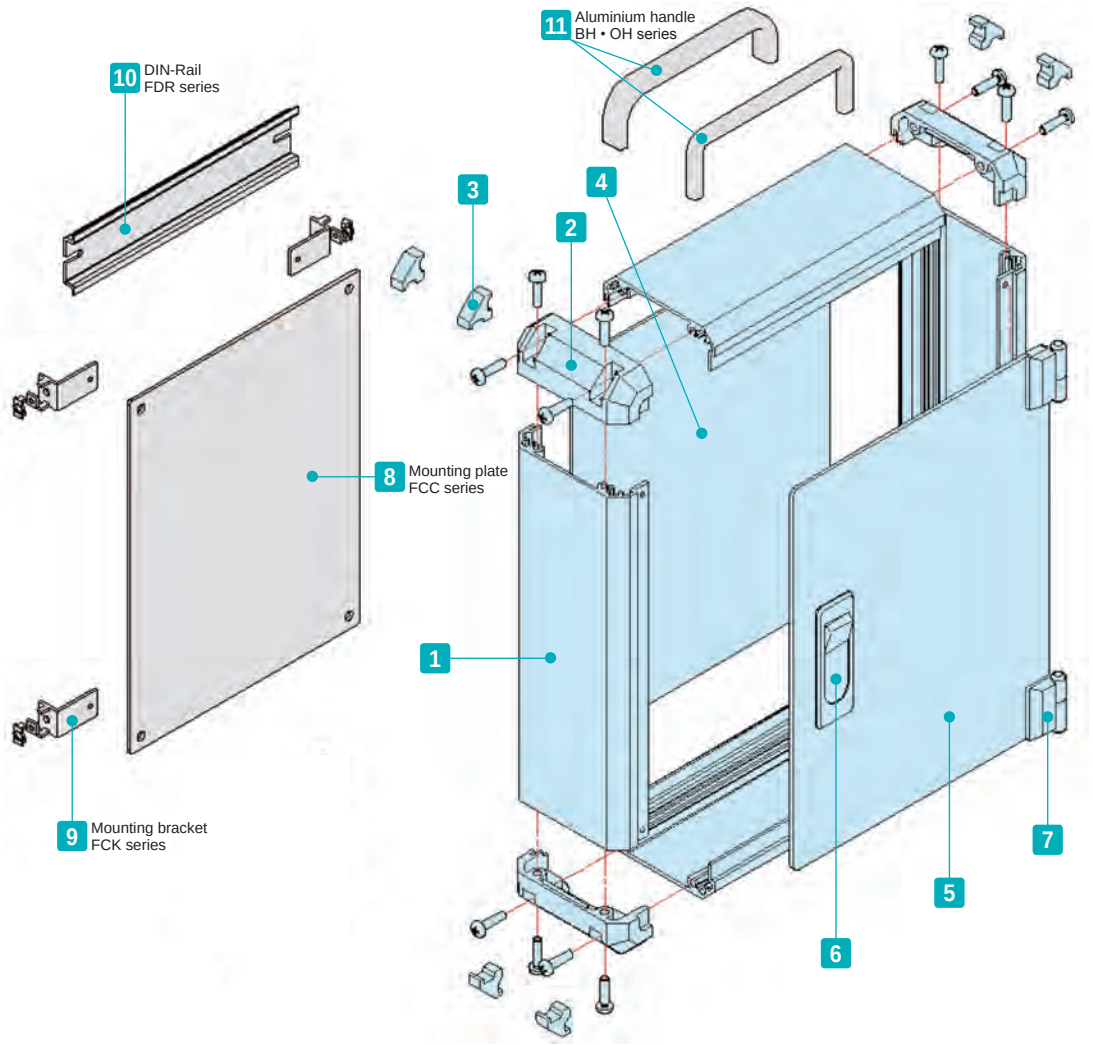

Included screws
M4-15 pan head & Trivalent chromate x 16 pcs
M3-5 pan head & Trivalent chromate x 2 pcs or 3 pcs
M3-5 flat head & Trivalent chromate x 2 pcs or 3 pcs
M4-8 slotted raised countersunk & Trivalent chromate x 2 pcs or 4 pcs
M4-6 slotted raised countersunk & Trivalent chromate x 2 pcs or 4 pcs

Components

No.	Part name	Pcs	Material	Color / Finish
1	Frame	4	Extruded aluminium A6063S-T5	Silver / Anodized with clear coating
2	Corner block	4	ABS UL94HB	Light gray • Black
3	Blind plug	8	Elastomer	Light gray • Black
4	Slide panel	1	Aluminium A1100P	Silver / Anodized
5	Open-closing panel	1	Aluminium A1100P	Silver / Anodized
6	Flat handle	1 set	Diecast Zinc	Silver / Painted
7	Hinge	1 set	Diecast Zinc	Silver / Painted

■ Panels are covered with a protective film on one side.

Accessories (Optional parts)

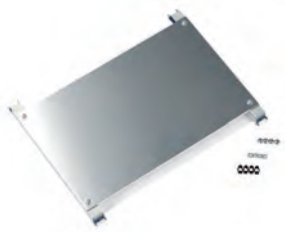

8 Mounting plate FCC series
See page 281 ~ 282

9 Mounting bracket FCK series
See page 282

10 DIN-Rail FDR series
See website

11 Aluminium handle BH • OH series
See website

Flat Handle Type

N : Normal type	K : Key lock type

Color Type

GS	BS

FCW dimensions

■ DXF/DWG/PDF/STP drawings available on our website.

Handle - 1 pc / Hinge - 2 pcs type

Not applicable for FCW□-30-50, FCW□-40-50, and FCW□-40-60 models.

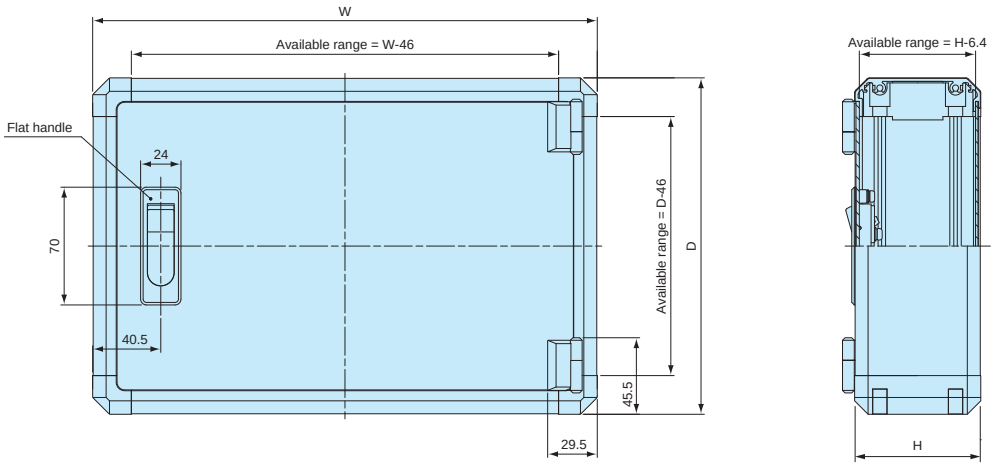

Handle - 2 pcs / Hinge - 3 pcs type

Applicable for FCW□-30-50, FCW□-40-50, and FCW□-40-60 models.

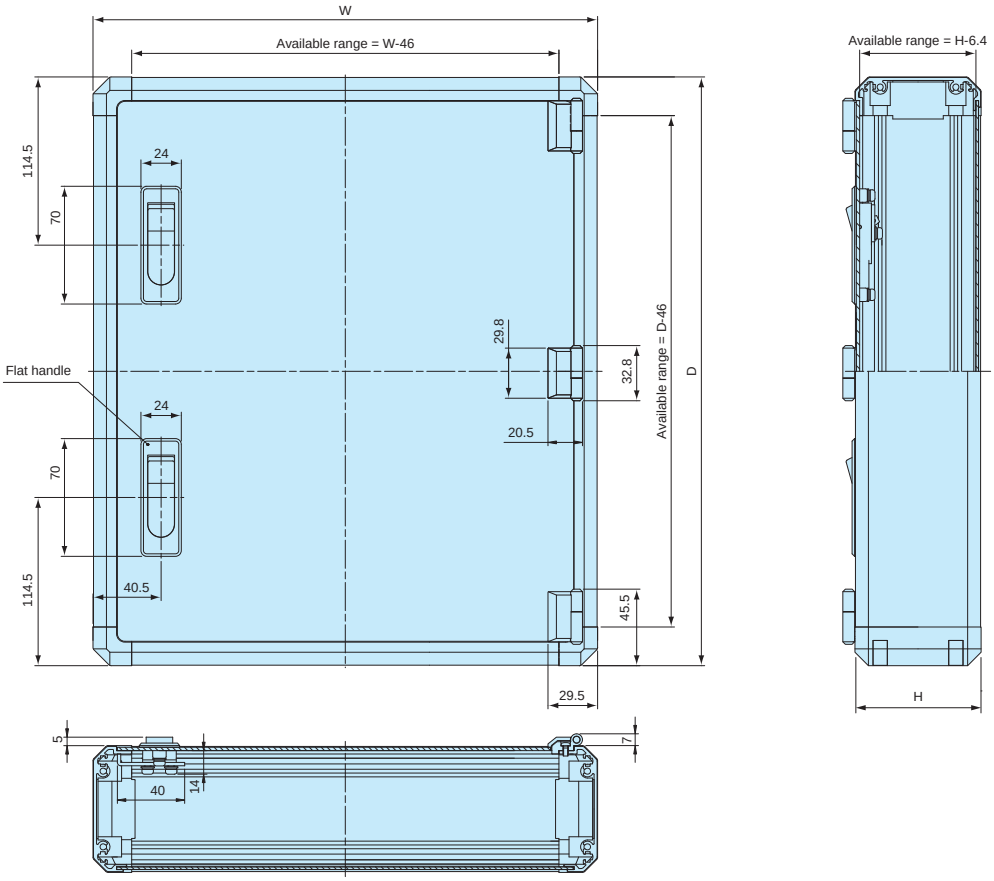

Specify your order with complete combination product number as per below

FCW 5 - 20 - 15 □ □□

□ Flat Handle Type (N or K)

□□ Color Code (GS or BS)

Product no. / Dimensions

Product no.	H	W	D	Weight (kg)	Flat handle / Hinge pcs
FCW5-15-20□□□	50.4	150	200	0.69	1 / 2
FCW5-15-25□□□	50.4	150	250	0.80	1 / 2
FCW5-20-15□□□	50.4	200	150	0.69	1 / 2
FCW5-20-20□□□	50.4	200	200	0.83	1 / 2
FCW5-20-25□□□	50.4	200	250	0.97	1 / 2
FCW5-20-30□□□	50.4	200	300	1.11	1 / 2
FCW5-25-25□□□	50.4	250	250	1.14	1 / 2
FCW5-25-30□□□	50.4	250	300	1.30	1 / 2
FCW5-25-40□□□	50.4	250	400	1.63	1 / 2
FCW5-30-20□□□	50.4	300	200	1.11	1 / 2
FCW5-30-30□□□	50.4	300	300	1.50	1 / 2
FCW5-30-40□□□	50.4	300	400	1.87	1 / 2
FCW5-30-50□□□	50.4	300	500	2.28	2 / 3
FCW5-35-25□□□	50.4	350	250	1.47	1 / 2
FCW5-40-30□□□	50.4	400	300	1.88	1 / 2
FCW5-40-40□□□	50.4	400	400	2.37	1 / 2
FCW5-40-50□□□	50.4	400	500	2.82	2 / 3
FCW5-40-60□□□	50.4	400	600	3.28	2 / 3
FCW6-15-20□□□	62.9	150	200	0.72	1 / 2
FCW6-15-25□□□	62.9	150	250	0.84	1 / 2
FCW6-20-15□□□	62.9	200	150	0.72	1 / 2
FCW6-20-20□□□	62.9	200	200	0.86	1 / 2
FCW6-20-25□□□	62.9	200	250	1.01	1 / 2
FCW6-20-30□□□	62.9	200	300	1.16	1 / 2
FCW6-25-25□□□	62.9	250	250	1.18	1 / 2
FCW6-25-30□□□	62.9	250	300	1.35	1 / 2
FCW6-25-40□□□	62.9	250	400	1.69	1 / 2
FCW6-30-20□□□	62.9	300	200	1.16	1 / 2
FCW6-30-30□□□	62.9	300	300	1.55	1 / 2
FCW6-30-40□□□	62.9	300	400	1.93	1 / 2
FCW6-30-50□□□	62.9	300	500	2.35	2 / 3
FCW6-35-25□□□	62.9	350	250	1.46	1 / 2
FCW6-40-30□□□	62.9	400	300	1.94	1 / 2
FCW6-40-40□□□	62.9	400	400	2.44	1 / 2
FCW6-40-50□□□	62.9	400	500	2.94	2 / 3
FCW6-40-60□□□	62.9	400	600	3.36	2 / 3
FCW8-15-20□□□	75.4	150	200	0.76	1 / 2
FCW8-15-25□□□	75.4	150	250	0.88	1 / 2
FCW8-20-15□□□	75.4	200	150	0.76	1 / 2
FCW8-20-20□□□	75.4	200	200	0.91	1 / 2
FCW8-20-25□□□	75.4	200	250	1.06	1 / 2
FCW8-20-30□□□	75.4	200	300	1.21	1 / 2
FCW8-25-25□□□	75.4	250	250	1.24	1 / 2
FCW8-25-30□□□	75.4	250	300	1.41	1 / 2
FCW8-25-40□□□	75.4	250	400	1.76	1 / 2
FCW8-30-20□□□	75.4	300	200	1.21	1 / 2
FCW8-30-30□□□	75.4	300	300	1.62	1 / 2
FCW8-30-40□□□	75.4	300	400	2.02	1 / 2
FCW8-30-50□□□	75.4	300	500	2.44	2 / 3
FCW8-35-25□□□	75.4	350	250	1.59	1 / 2
FCW8-40-30□□□	75.4	400	300	2.02	1 / 2
FCW8-40-40□□□	75.4	400	400	2.53	1 / 2
FCW8-40-50□□□	75.4	400	500	3.05	2 / 3
FCW8-40-60□□□	75.4	400	600	3.47	2 / 3

Product no.	H	W	D	Weight (kg)	Flat handle / Hinge pcs
FCW10-15-20□□□	100.4	150	200	0.83	1 / 2
FCW10-15-25□□□	100.4	150	250	0.97	1 / 2
FCW10-20-15□□□	100.4	200	150	0.83	1 / 2
FCW10-20-20□□□	100.4	200	200	1.00	1 / 2
FCW10-20-25□□□	100.4	200	250	1.17	1 / 2
FCW10-20-30□□□	100.4	200	300	1.33	1 / 2
FCW10-25-25□□□	100.4	250	250	1.36	1 / 2
FCW10-25-30□□□	100.4	250	300	1.55	1 / 2
FCW10-25-40□□□	100.4	250	400	1.93	1 / 2
FCW10-30-20□□□	100.4	300	200	1.34	1 / 2
FCW10-30-30□□□	100.4	300	300	1.77	1 / 2
FCW10-30-40□□□	100.4	300	400	2.20	1 / 2
FCW10-30-50□□□	100.4	300	500	2.64	2 / 3
FCW10-35-25□□□	100.4	350	250	1.74	1 / 2
FCW10-40-30□□□	100.4	400	300	2.21	1 / 2
FCW10-40-40□□□	100.4	400	400	2.74	1 / 2
FCW10-40-50□□□	100.4	400	500	3.27	2 / 3
FCW10-40-60□□□	100.4	400	600	3.71	2 / 3
FCW13-15-20□□□	125.4	150	200	0.89	1 / 2
FCW13-15-25□□□	125.4	150	250	1.04	1 / 2
FCW13-20-15□□□	125.4	200	150	0.89	1 / 2
FCW13-20-20□□□	125.4	200	200	1.06	1 / 2
FCW13-20-25□□□	125.4	200	250	1.32	1 / 2
FCW13-20-30□□□	125.4	200	300	1.41	1 / 2
FCW13-25-25□□□	125.4	250	250	1.44	1 / 2
FCW13-25-30□□□	125.4	250	300	1.63	1 / 2
FCW13-25-40□□□	125.4	250	400	2.02	1 / 2
FCW13-30-20□□□	125.4	300	200	1.41	1 / 2
FCW13-30-30□□□	125.4	300	300	1.94	1 / 2
FCW13-30-40□□□	125.4	300	400	2.30	1 / 2
FCW13-30-50□□□	125.4	300	500	2.74	2 / 3
FCW13-35-25□□□	125.4	350	250	1.83	1 / 2
FCW13-40-30□□□	125.4	400	300	2.30	1 / 2
FCW13-40-40□□□	125.4	400	400	2.86	1 / 2
FCW13-40-50□□□	125.4	400	500	3.39	2 / 3
FCW13-40-60□□□	125.4	400	600	3.84	2 / 3
FCW15-15-20□□□	150.4	150	200	0.96	1 / 2
FCW15-15-25□□□	150.4	150	250	1.07	1 / 2
FCW15-20-15□□□	150.4	200	150	0.91	1 / 2
FCW15-20-20□□□	150.4	200	200	1.18	1 / 2
FCW15-20-25□□□	150.4	200	250	1.37	1 / 2
FCW15-20-30□□□	150.4	200	300	1.57	1 / 2
FCW15-25-25□□□	150.4	250	250	1.59	1 / 2
FCW15-25-30□□□	150.4	250	300	1.80	1 / 2
FCW15-25-40□□□	150.4	250	400	2.23	1 / 2
FCW15-30-20□□□	150.4	300	200	1.57	1 / 2
FCW15-30-30□□□	150.4	300	300	2.05	1 / 2
FCW15-30-40□□□	150.4	300	400	2.53	1 / 2
FCW15-30-50□□□	150.4	300	500	2.99	2 / 3
FCW15-35-25□□□	150.4	350	250	2.02	1 / 2
FCW15-40-30□□□	150.4	400	300	2.53	1 / 2
FCW15-40-40□□□	150.4	400	400	3.12	1 / 2
FCW15-40-50□□□	150.4	400	500	3.68	2 / 3
FCW15-40-60□□□	150.4	400	600	4.14	2 / 3

Cross-section view of FC • FCW

■ DXF/DWG/PDF/STP drawings available on our website.

FC4

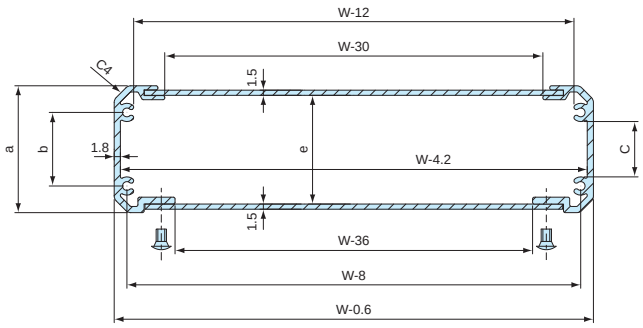

FC5 • FC6 • FC8 • FC10 • FC13 • FC15

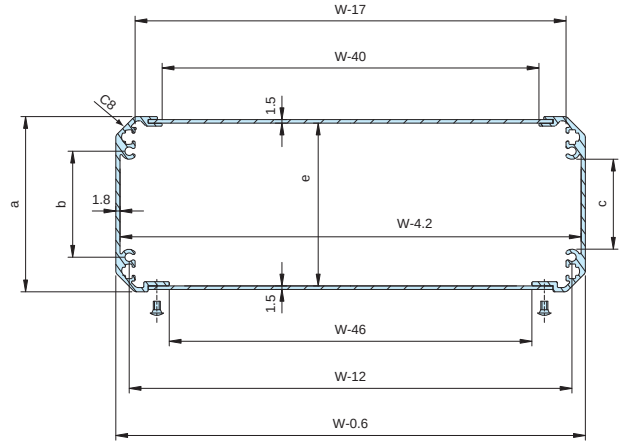

FCW5 • FCW6 • FCW8 • FCW10 • FCW13 • FCW15

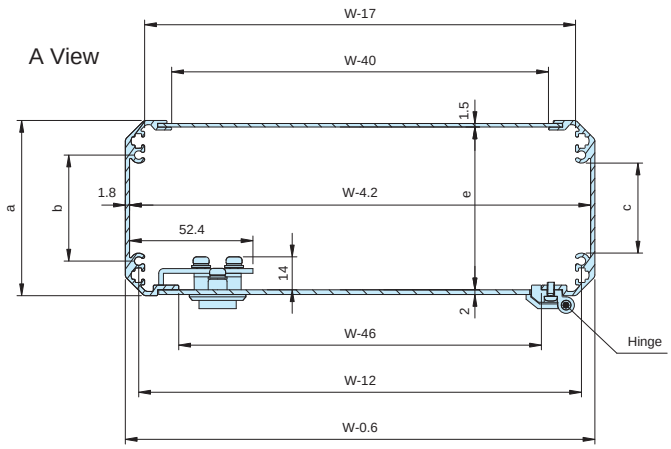

W Cross-section

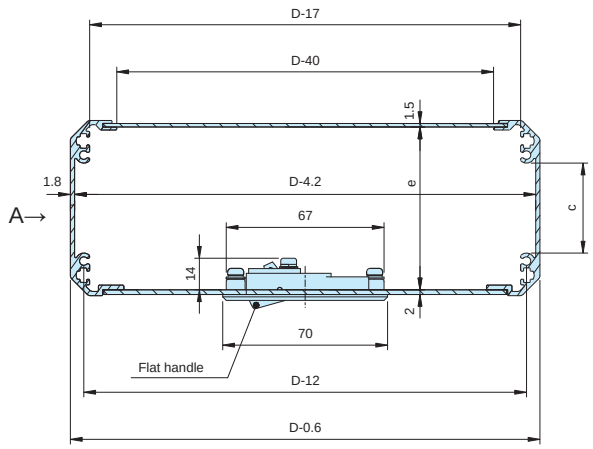

D cross-section

Box height	a	b	c	e
37.9	36.9	21.4	16.1	31.5
50.4	49.4	20	13.2	44
62.9	61.9	32.5	25.7	56.5
75.4	74.4	45	38.2	69
100.4	99.4	70	63.2	94
125.4	124.4	95	88.2	119
150.4	149.4	120	113.2	144

FC-BK series BLIND PLUG

■ Spare / Replacement bling plug for FC • FCW series.

FC-BK drawings

■ DXF/DWG/PDF drawings available on our website.

FC-BK-S□ (FC4 models)

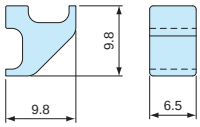

FC-BK-□ (Other FC models • FCW series)

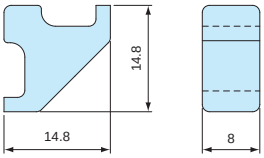

Product no.	Material	Color	Pack of
FC-BK-SG	Elastomer	Light gray	4
FC-BK-SB	Elastomer	Black	4
FC-BK-G	Elastomer	Light gray	4
FC-BK-B	Elastomer	Black	4

FW series HINGE for FCW

■ Spare / Replacement hinge for FCW series.

FW drawings

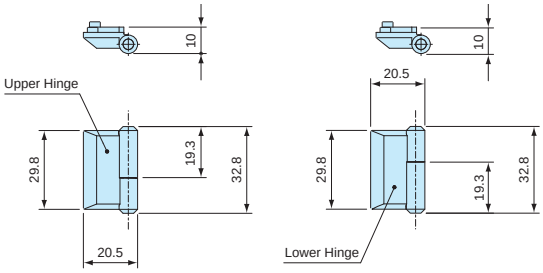

Product no.	Material	Color / Finish	Pack of
FW-2S	Diecast zinc	Silver / Painted	1 set (Upper/Lower)

PH-88 series FLAT HANDLE for FCW

■ Spare / Replacement flat handle for FCW series.

PH-88 drawings

■ DXF/DWG/PDF drawings available on our website.

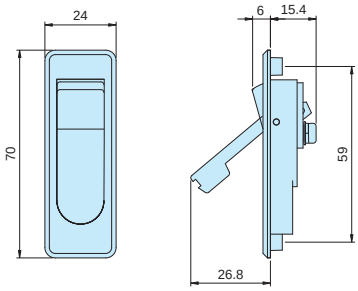

Normal type (without Key)

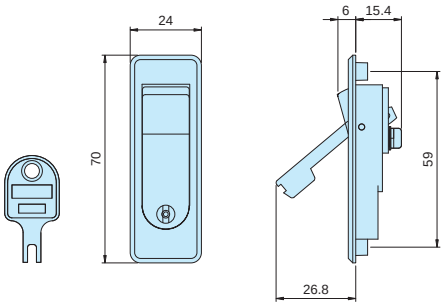

Key-lock type (with Key)

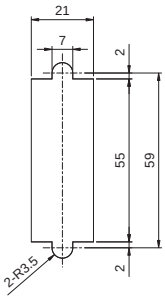

Hole layout
for mounting

Product no.	Key	Material	Color / Finish
PH-88A-2S	Without	Diecast zinc	Silver / Painted
PH-88 -2S	With	Diecast zinc	Silver / Painted

FCC series MOUNTING PLATE for FC • FCW

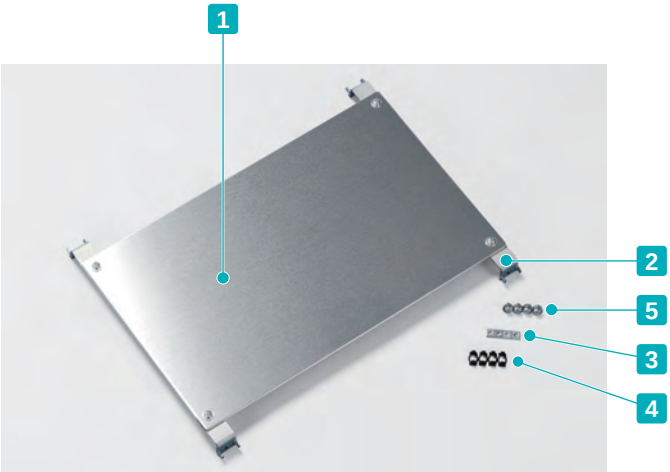

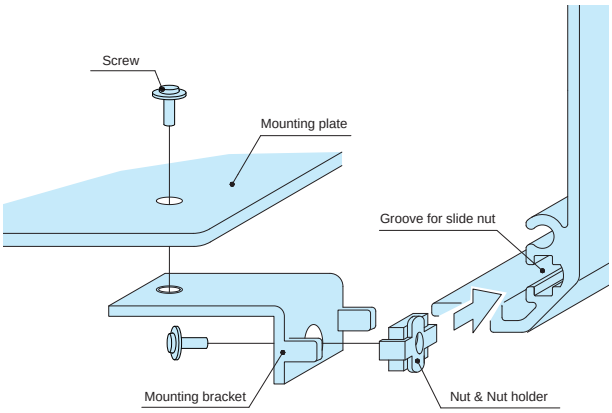

- The mounting bracket comes in 2 different height versions, 12mm and 22mm.
- Use 22mm height version when set on the open/close panel side of FCW series.
- Not suitable for FC4 (H = 37.9mm)
- Mounting brackets (FCK) are included with FCC series.

How to assemble

①Slide a M3 nut and nut holder into the groove on the frame.

②Screw the mounting bracket into the nut holder.

③Screw the mounting plate onto the mounting bracket.

FCC drawings

For box size (W x D or D x W) 100 x 100mm to 350 x 300mm

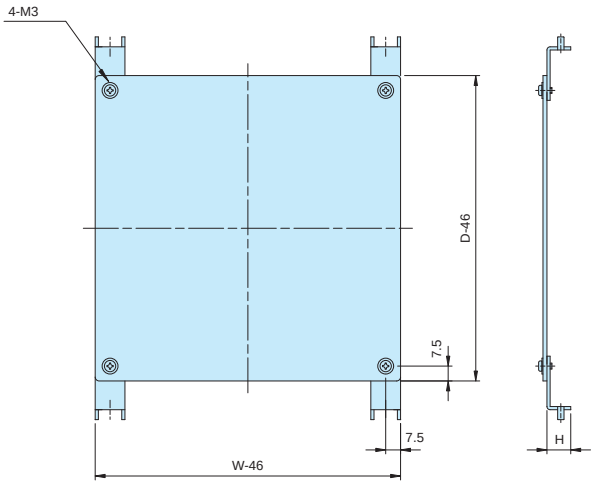

For box size (W x D or D x W) 400/500/600 x 200/250/300 mm

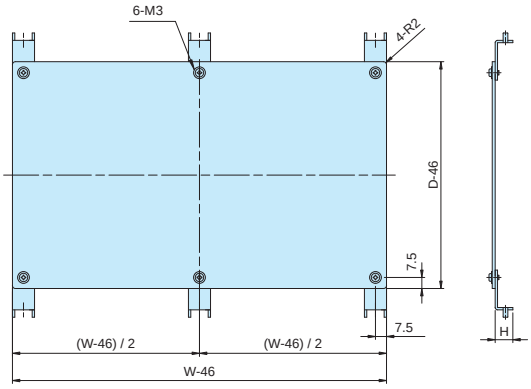

Components

No.	Part name	Material	Color / Finish
1	Mounting plate	Aluminium A1050P t=2.0	Unfinished
2	Mounting bracket	Steel SECC t=1.6	Zinc coated
3	M3 nut	Steel SPCC t=1.6	Trivalent chromate
4	Nut holder	POM	Black
5	Screw M3-6 pan head	Steel	Trivalent chromate

Product no. / Dimensions

Product no.	H	Box WxD or DxW	Product no.	H	Box WxD or DxW
FCC10-10-1	12	100×100	FCC10-10-2	22	100×100
FCC15-10-1	12	150×100	FCC15-10-2	22	150×100
FCC15-15-1	12	150×150	FCC15-15-2	22	150×150
FCC20-10-1	12	200×100	FCC20-10-2	22	200×100
FCC20-15-1	12	200×150	FCC20-15-2	22	200×150
FCC20-20-1	12	200×200	FCC20-20-2	22	200×200
FCC25-15-1	12	250×150	FCC25-15-2	22	250×150
FCC25-20-1	12	250×200	FCC25-20-2	22	250×200
FCC25-25-1	12	250×250	FCC25-25-2	22	250×250
FCC30-15-1	12	300×150	FCC30-15-2	22	300×150
FCC30-20-1	12	300×200	FCC30-20-2	22	300×200
FCC30-25-1	12	300×250	FCC30-25-2	22	300×250
FCC30-30-1	12	300×300	FCC30-30-2	22	300×300
FCC35-20-1	12	350×200	FCC35-20-2	22	350×200
FCC35-25-1	12	350×250	FCC35-25-2	22	350×250
FCC35-30-1	12	350×300	FCC35-30-2	22	350×300

Included screws: M3-6 pan head trivalent chromate with flat washer x 8 pcs

Product no. / Dimensions

Product no.	H	Box WxD or DxW	Product no.	H	Box WxD or DxW
FCC40-20-1	12	400×200	FCC40-20-2	22	400×200
FCC40-25-1	12	400×250	FCC40-25-2	22	400×250
FCC40-30-1	12	400×300	FCC40-30-2	22	400×300
FCC50-25-1	12	500×250	FCC50-25-2	22	500×250
FCC50-30-1	12	500×300	FCC50-30-2	22	500×300
FCC60-30-1	12	600×300	FCC60-30-2	22	600×300

Included screws: M3-6 pan head trivalent chromate with flat washer x 12 pcs

- DXF/DWG/PDF/STP drawings available on our website.

FCC drawings

■ DXF/DWG/PDF/STP drawings available on our website.

For box size (W x D or D x W) 400/500/600 x 400mm

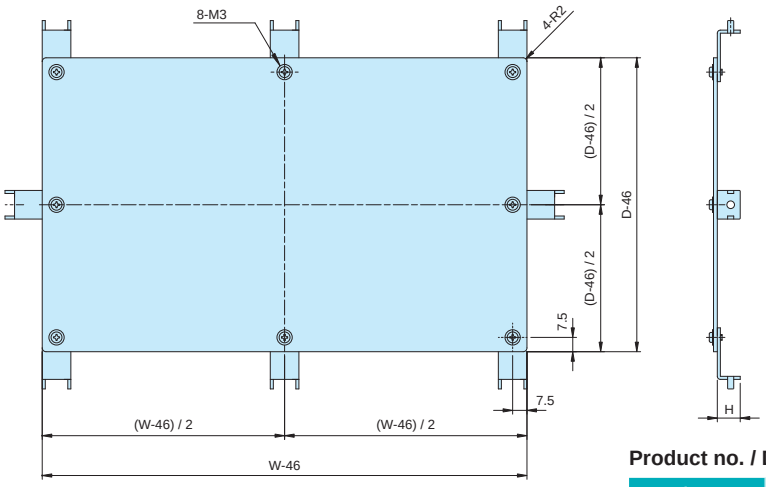

Product no. / Dimensions

Product no.	H	Box WxD or DxW	Product no.	H	Box WxD or DxW
FCC40-40-1	12	400×400	FCC40-40-2	22	400×400
FCC50-40-1	12	500×400	FCC50-40-2	22	500×400
FCC60-40-1	12	600×400	FCC60-40-2	22	600×400

Included screws: M3-6 pan head trivalent chromate with flat washer x 16 pcs

Accessories (Optional parts)

FCK series MOUNTING BRACKET

FCK drawings

■ DXF/DWG/PDF drawings available on our website.

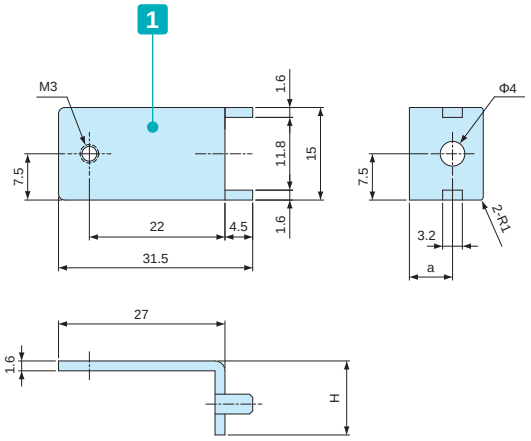

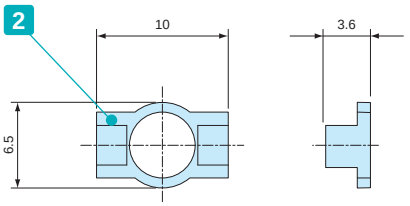

Nut holder

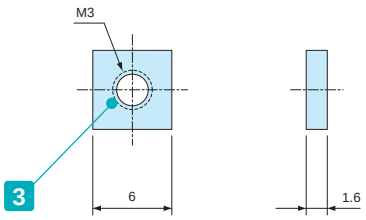

Nut

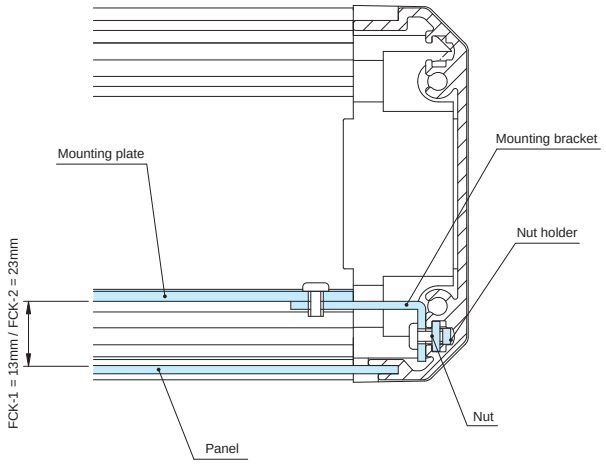

- 2 mounting brackets for PCB or DIN-Rail.
- FCK mounting bracket comes with FCC mounting plate. Additional FCK is not necessary when purchasing FCC series.
- Not suitable for FC4 (H = 37.9mm).

Components

No.	Part name	Material	Color / Finish
1	Mounting bracket	Steel SECC t=1.6	Zinc coated
2	Nut holder	POM	Black
3	M3 nut	Steel SPCC t=1.6	Trivalent chromate

Product no. / Dimensions

Product no.	H	a	Pack of
FCK-1	12	7	10
FCK-2	22	17	10

Included screws: M3-6 pan head trivalent chromate with flat washer x 20 pcs

MS series APPLICATION EXAMPLE

The desktop metal type MS series enclosure is suitable for use as measuring instruments, testing equipment, power supply controller, etc.
A wide variety of 3 different colors and 176 different sizes are available.

4 Distinct Models for Different Applications

Standard Desktop Model - MS series

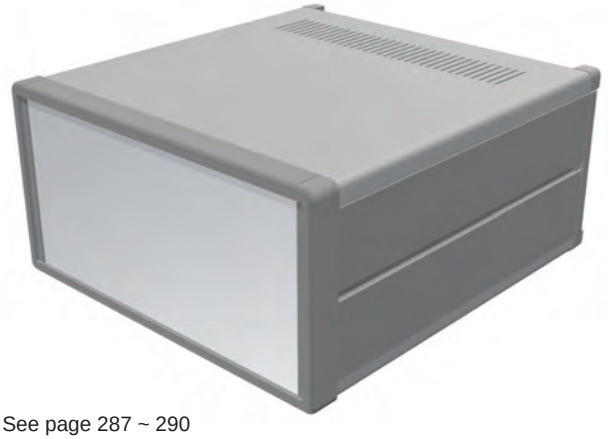

See page 287 ~ 290

Tip-Up Handle Model - MSN series

See website

Carrying Handle Model - MSY series

See website

19” Rack Mount Model - MSR series

See website

APPLICATION EXAMPLES

EDDY Current Flaw Indicator Product by Micro-Fix (Japan)

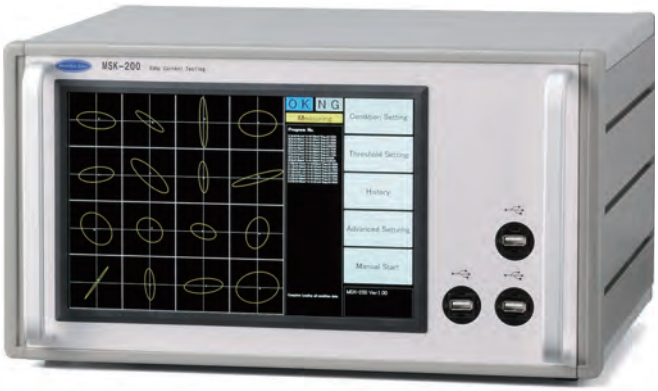

Multichannel I/V Converter Amplifier

Product by TURTLE INDUSTRY (Japan)

Reference Signal Distributor

Product by Freqtime (Japan)

Embedded PCB Checker

Product by KYOSAITECHNOS (Japan)

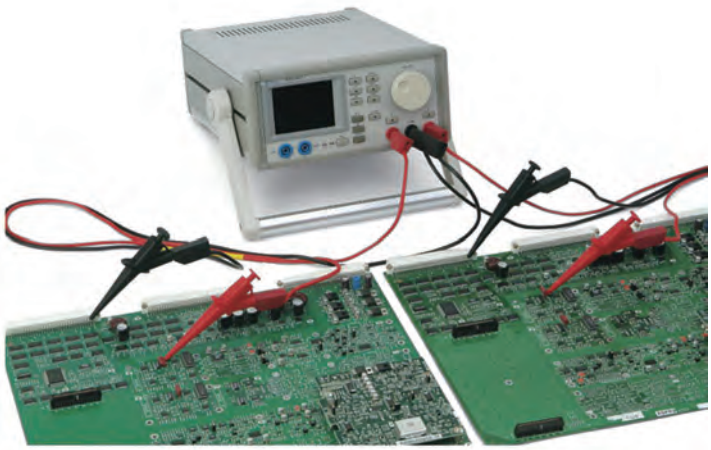

Precision Programmable Resistance Box / RTD Simulator

Product by Alpha Electronics (Japan)

Handy Probe EDDY Resistance Meter

Product by NAPSON (Japan)

Quenching Depth Indicator Product by Denshijiki Industry (Japan)

Wide Band Power Amplifier Product by RAD (Japan)

Diagnostic Device Product by Cors (Japan)

Solar Power Analyzer Product by SPD Laboratory (Japan)

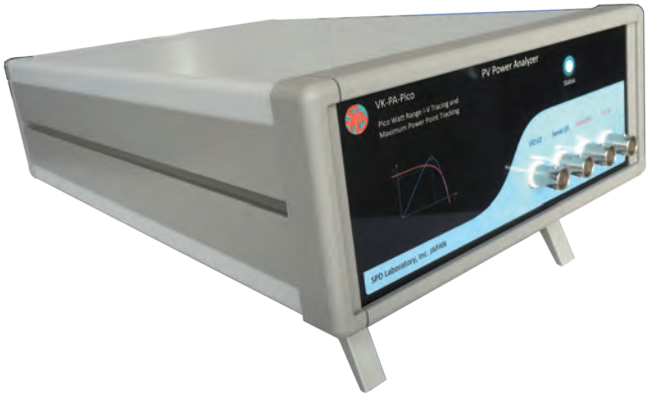

Portable PV Simulator Product by Nippon Kernel System (Japan)

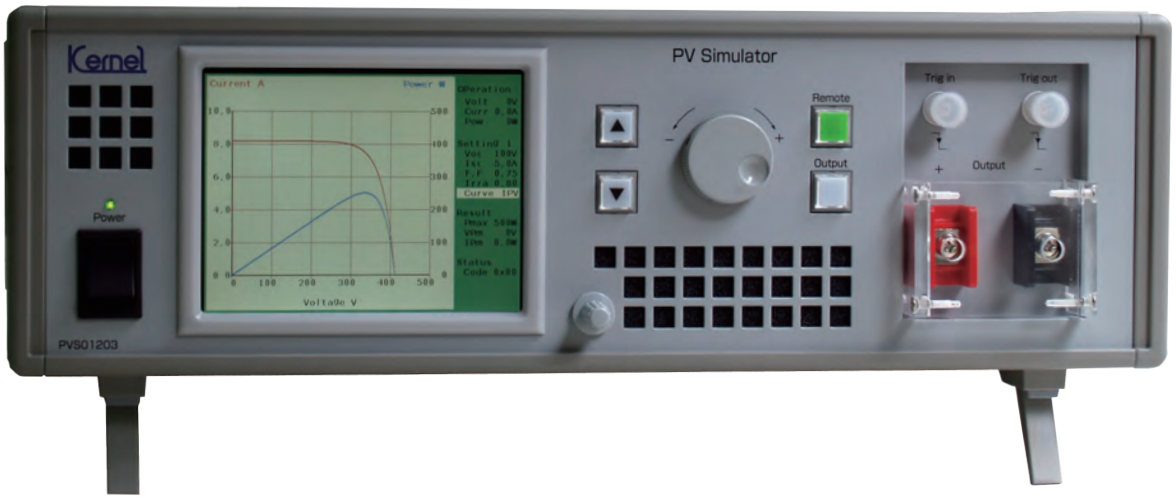

Fiber Optic Thermometer Product by Anritsu Meter (Japan)

Precision Platinum Resistance Thermometer

Product by Anritsu Meter (Japan)

Optical Small Internal Diameter Meter

Product by DAI-ICHI SOKUHAN (Japan)

Seismic Monitor Product by Tokyo Sokushin (Japan)

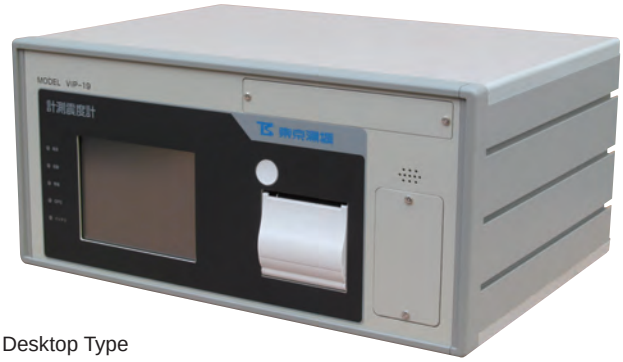

Desktop Type

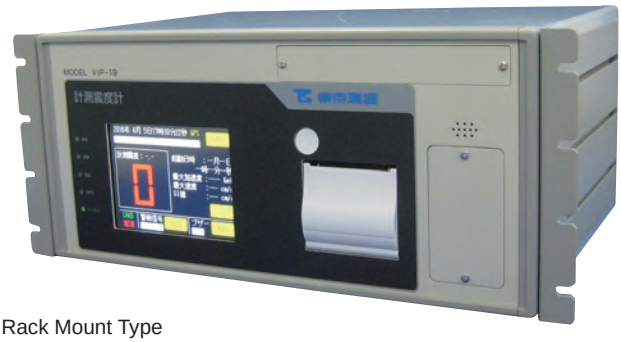

Rack Mount Type

MS series DESKTOP ENCLOSURE

- Available in 3 different colors and 176 different sizes.
- Screws are hidden out of view for a sophisticated and elegant look.
- Suitable for use as measuring instruments, testing equipment, power supply controller, etc.

MSN series
Tip-Up Handle Model

MSY series
Carrying Handle Model

MSR series
19" Rack Mount Model

Variations of MS series, MSN, MSY and MSR series are also available. See website for more details.

Assembly drawings

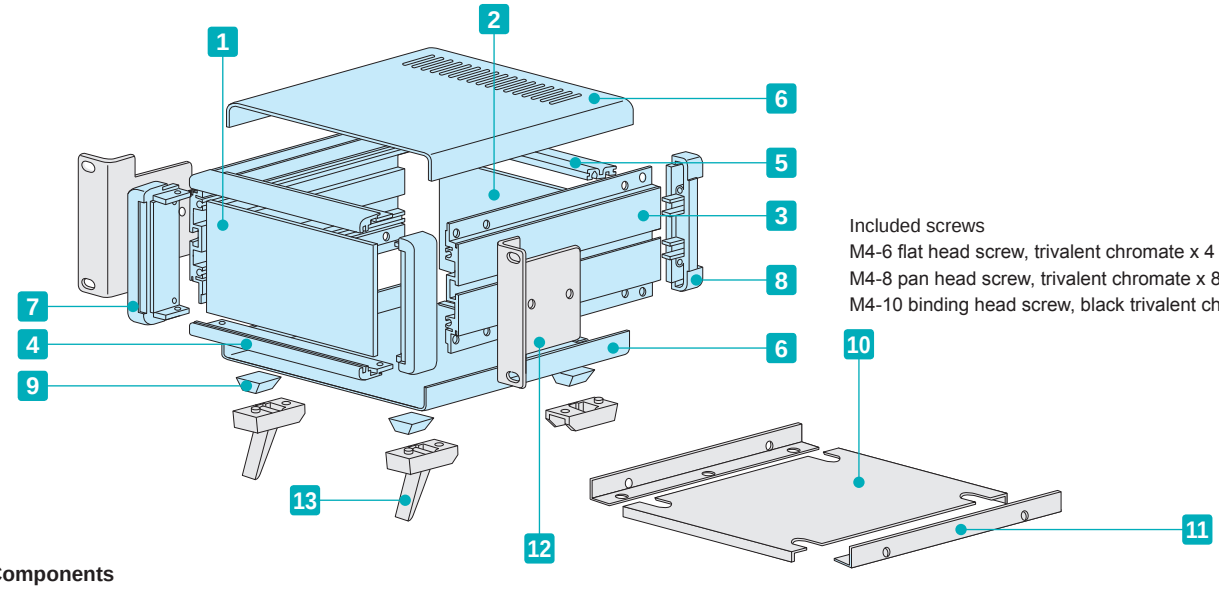

Included screws
M4-6 flat head screw, trivalent chromate x 4 pcs
M4-8 pan head screw, trivalent chromate x 8 pcs
M4-10 binding head screw, black trivalent chromate x 4 pcs

Components

No.	Part name	Pcs	Material	Color / Finish
1	Front panel	1	Aluminium A1100P t=2.0	Silver • Black / Anodized
2	Rear panel	1	Aluminium A1100P t=2.0	Silver • Black / Anodized
3	Side frame	2	Extruded aluminium A6063S-T5	Gray • Black / Painted
4	Front frame	2	Extruded aluminium A6063S-T5	Gray • Black / Painted
5	Rear frame	2	Extruded aluminium A6063S-T5	Silver / Anodized
6	Top • Bottom cover	1 each	Steel SPCC t=1.0	Light gray • Black / Painted
7	Corner block	2	Diecast aluminium ADC12	Gray • Black / Painted
8	Rear feet	2	ABS UL94V-0	Gray • Black
9	Rubber feet	4	Polyurethane	Black

■ Front • Rear panels are covered with a protective film on one side.

Accessories (Optional parts)

10 Mounting plate MSC series
See page 291

11 L-bracket MSCL series
See page 291

12 Rack mounting MSM series
See website

13 Tilt leg TL series
See page 292

Cable hook CBF series
See page 292

MS dimensions

■ DXF/DWG/PDF/STP drawings available on our website.

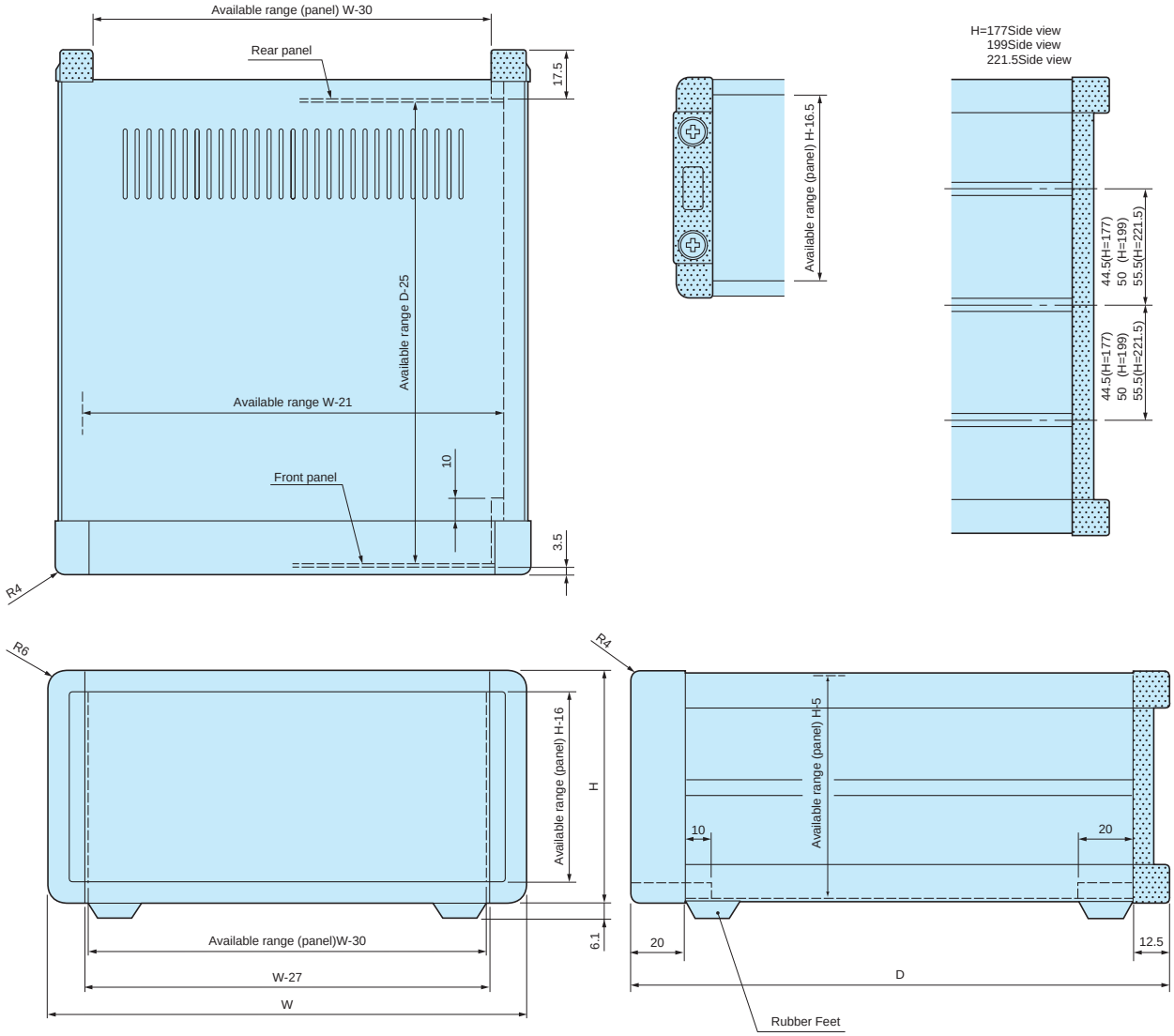

■ Top • Bottom cover of sizes 160x160, 160x230, 160x280, 210x160 do not have ventilation holes.

Color Type

■ Please suffix color code at the end of the product number.

G		B		BS	
Panel	Silver	Panel	Black	Panel	Silver
Top • Bottom cover	Light gray	Top • Bottom cover	Black	Top • Bottom cover	Black
Side frame	Gray	Side frame	Black	Side frame	Black

Product no. / Dimensions

Product no.	H	W	D	Weight (kg)
MS 66-16-16□	66	160	160	1.0
MS 66-16-23□	66	160	230	1.3
MS 66-16-28□	66	160	280	1.6
MS 66-21-16□	66	210	160	1.2
MS 66-21-23□	66	210	230	1.6
MS 66-21-28□	66	210	280	1.8
MS 66-21-35□	66	210	350	2.2
MS 66-26-23□	66	260	230	1.8
MS 66-26-28□	66	260	280	2.1
MS 66-26-35□	66	260	350	2.6
MS 66-32-23□	66	320	230	2.1
MS 66-32-28□	66	320	280	2.5
MS 66-32-35□	66	320	350	3.0
MS 66-32-45□	66	320	450	3.7
MS 66-37-23□	66	370	230	2.4
MS 66-37-28□	66	370	280	2.8
MS 66-37-35□	66	370	350	3.3
MS 66-37-45□	66	370	450	4.1
MS 66-43-23□	66	430	230	2.7
MS 66-43-28□	66	430	280	3.1
MS 66-43-35□	66	430	350	3.7
MS 66-43-45□	66	430	450	4.6
MS 88-16-16□	88	160	160	1.1
MS 88-16-23□	88	160	230	1.5
MS 88-16-28□	88	160	280	1.7
MS 88-21-16□	88	210	160	1.3
MS 88-21-23□	88	210	230	1.8
MS 88-21-28□	88	210	280	2.1
MS 88-21-35□	88	210	350	2.5
MS 88-26-23□	88	260	230	2.0
MS 88-26-28□	88	260	280	2.5
MS 88-26-35□	88	260	350	2.8
MS 88-32-23□	88	320	230	2.3
MS 88-32-28□	88	320	280	2.8
MS 88-32-35□	88	320	350	3.2
MS 88-32-45□	88	320	450	4.0
MS 88-37-23□	88	370	230	2.6
MS 88-37-28□	88	370	280	3.0
MS 88-37-35□	88	370	350	3.6
MS 88-37-45□	88	370	450	4.4
MS 88-43-23□	88	430	230	2.9
MS 88-43-28□	88	430	280	3.4
MS 88-43-35□	88	430	350	4.0
MS 88-43-45□	88	430	450	5.0

Product no.	H	W	D	Weight (kg)
MS 99-16-16□	99	160	160	1.1
MS 99-16-23□	99	160	230	1.5
MS 99-16-28□	99	160	280	1.8
MS 99-21-16□	99	210	160	1.4
MS 99-21-23□	99	210	230	1.8
MS 99-21-28□	99	210	280	2.1
MS 99-21-35□	99	210	350	2.5
MS 99-26-23□	99	260	230	2.0
MS 99-26-28□	99	260	280	2.4
MS 99-26-35□	99	260	350	2.8
MS 99-32-23□	99	320	230	2.4
MS 99-32-28□	99	320	280	2.8
MS 99-32-35□	99	320	350	3.3
MS 99-32-45□	99	320	450	4.0
MS 99-37-23□	99	370	230	2.6
MS 99-37-28□	99	370	280	3.0
MS 99-37-35□	99	370	350	3.6
MS 99-37-45□	99	370	450	4.5
MS 99-43-23□	99	430	230	3.0
MS 99-43-28□	99	430	280	3.4
MS 99-43-35□	99	430	350	4.1
MS 99-43-45□	99	430	450	5.0
MS133-16-16□	132.5	160	160	1.3
MS133-16-23□	132.5	160	230	1.7
MS133-16-28□	132.5	160	280	2.0
MS133-21-16□	132.5	210	160	1.6
MS133-21-23□	132.5	210	230	2.1
MS133-21-28□	132.5	210	280	2.4
MS133-21-35□	132.5	210	350	2.9
MS133-26-23□	132.5	260	230	2.4
MS133-26-28□	132.5	260	280	2.8
MS133-26-35□	132.5	260	350	3.3
MS133-32-23□	132.5	320	230	2.7
MS133-32-28□	132.5	320	280	3.2
MS133-32-35□	132.5	320	350	3.7
MS133-32-45□	132.5	320	450	4.5
MS133-37-23□	132.5	370	230	3.0
MS133-37-28□	132.5	370	280	3.5
MS133-37-35□	132.5	370	350	4.1
MS133-37-45□	132.5	370	450	5.0
MS133-43-23□	132.5	430	230	3.4
MS133-43-28□	132.5	430	280	3.9
MS133-43-35□	132.5	430	350	4.6
MS133-43-45□	132.5	430	450	5.6

Product no. / Dimensions

Product no.	H	W	D	Weight (kg)
MS149-16-16□	149	160	160	1.4
MS149-16-23□	149	160	230	1.8
MS149-16-28□	149	160	280	2.1
MS149-21-16□	149	210	160	1.6
MS149-21-23□	149	210	230	2.1
MS149-21-28□	149	210	280	2.4
MS149-21-35□	149	210	350	2.9
MS149-26-23□	149	260	230	2.4
MS149-26-28□	149	260	280	2.8
MS149-26-35□	149	260	350	3.3
MS149-32-23□	149	320	230	2.7
MS149-32-28□	149	320	280	3.2
MS149-32-35□	149	320	350	3.8
MS149-32-45□	149	320	450	4.6
MS149-37-23□	149	370	230	3.0
MS149-37-28□	149	370	280	3.5
MS149-37-35□	149	370	350	4.1
MS149-37-45□	149	370	450	5.1
MS149-43-23□	149	430	230	3.4
MS149-43-28□	149	430	280	3.9
MS149-43-35□	149	430	350	4.6
MS149-43-45□	149	430	450	5.6
MS177-16-16□	177	160	160	1.6
MS177-16-23□	177	160	230	2.2
MS177-16-28□	177	160	280	2.5
MS177-21-16□	177	210	160	1.9
MS177-21-23□	177	210	230	2.7
MS177-21-28□	177	210	280	3.1
MS177-21-35□	177	210	350	3.6
MS177-26-23□	177	260	230	3.0
MS177-26-28□	177	260	280	3.4
MS177-26-35□	177	260	350	4.0
MS177-32-23□	177	320	230	3.3
MS177-32-28□	177	320	280	3.9
MS177-32-35□	177	320	350	4.5
MS177-32-45□	177	320	450	5.5
MS177-37-23□	177	370	230	3.6
MS177-37-28□	177	370	280	4.2
MS177-37-35□	177	370	350	4.9
MS177-37-45□	177	370	450	6.0
MS177-43-23□	177	430	230	4.0
MS177-43-28□	177	430	280	4.6
MS177-43-35□	177	430	350	5.4
MS177-43-45□	177	430	450	6.6

Product no.	H	W	D	Weight (kg)
MS199-16-16□	199	160	160	1.9
MS199-16-23□	199	160	230	2.4
MS199-16-28□	199	160	280	2.7
MS199-21-16□	199	210	160	2.1
MS199-21-23□	199	210	230	2.7
MS199-21-28□	199	210	280	3.1
MS199-21-35□	199	210	350	3.7
MS199-26-23□	199	260	230	3.1
MS199-26-28□	199	260	280	3.5
MS199-26-35□	199	260	350	4.1
MS199-32-23□	199	320	230	3.4
MS199-32-28□	199	320	280	3.9
MS199-32-35□	199	320	350	4.7
MS199-32-45□	199	320	450	5.7
MS199-37-23□	199	370	230	3.8
MS199-37-28□	199	370	280	4.3
MS199-37-35□	199	370	350	5.1
MS199-37-45□	199	370	450	6.0
MS199-43-23□	199	430	230	4.2
MS199-43-28□	199	430	280	4.8
MS199-43-35□	199	430	350	5.6
MS199-43-45□	199	430	450	6.9
MS222-16-16□	222	160	160	2.0
MS222-16-23□	222	160	230	2.5
MS222-16-28□	222	160	280	2.8
MS222-21-16□	222	210	160	2.2
MS222-21-23□	222	210	230	2.8
MS222-21-28□	222	210	280	3.2
MS222-21-35□	222	210	350	3.8
MS222-26-23□	222	260	230	3.2
MS222-26-28□	222	260	280	3.6
MS222-26-35□	222	260	350	4.3
MS222-32-23□	222	320	230	3.6
MS222-32-28□	222	320	280	4.1
MS222-32-35□	222	320	350	4.9
MS222-32-45□	222	320	450	6.0
MS222-37-23□	222	370	230	3.9
MS222-37-28□	222	370	280	4.5
MS222-37-35□	222	370	350	5.3
MS222-37-45□	222	370	450	6.4
MS222-43-23□	222	430	230	4.4
MS222-43-28□	222	430	280	5.0
MS222-43-35□	222	430	350	5.9
MS222-43-45□	222	430	450	7.2

MSC series MOUNTING PLATE for MS

MSC dimensions

■ DXF/DWG/PDF/STP drawings available on our website.

■ 1 set = Mounting plate + L-bracket

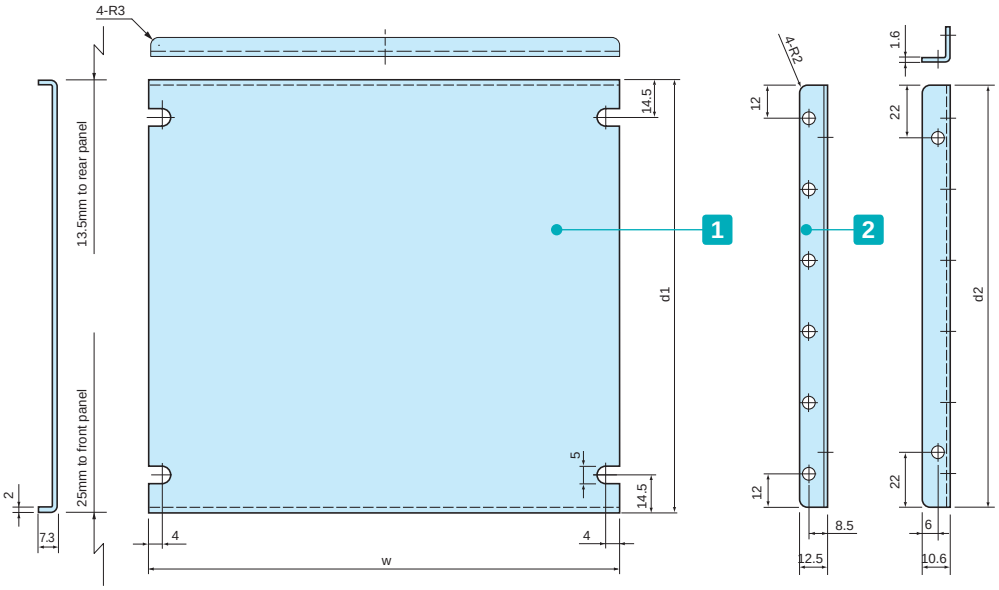

Mounting example

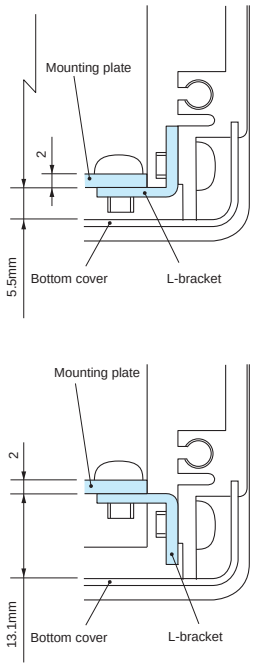

Components

No.	Part name	Pcs	Material	Color / Finish
1	Mounting plate	1	Aluminium A1050P t=2.0	Unfinished
2	L-bracket	2	Steel SPCC	Trivalent chromate

Included screws: M4-6 pan head, trivalent chromate x8

Product no. / Dimensions

Product no.	w	d1	d2	Enclosure W×D	Weight (g)
MSC16-16	130	96.5	91.5	160 × 160	120
MSC16-23	130	166.5	161.5	160 × 230	210
MSC16-28	130	216.5	211.5	160 × 280	270
MSC21-16	180	96.5	91.5	210 × 160	150
MSC21-23	180	166.5	161.5	210 × 230	250
MSC21-28	180	216.5	211.5	210 × 280	330
MSC21-35	180	286.5	281.5	210 × 350	430
MSC26-23	230	166.5	161.5	260 × 230	300
MSC26-28	230	216.5	211.5	260 × 280	390
MSC26-35	230	286.5	281.5	260 × 350	510
MSC32-23	290	166.5	161.5	320 × 230	360

Product no.	w	d1	d2	Enclosure W×D	Weight (g)
MSC32-28	290	216.5	211.5	320 × 280	460
MSC32-35	290	286.5	281.5	320 × 350	600
MSC32-45	290	386.5	381.5	320 × 450	810
MSC37-23	340	166.5	161.5	370 × 230	410
MSC37-28	340	216.5	211.5	370 × 280	520
MSC37-35	340	286.5	281.5	370 × 350	680
MSC37-45	340	386.5	381.5	370 × 450	910
MSC43-23	400	166.5	161.5	430 × 230	460
MSC43-28	400	216.5	211.5	430 × 280	590
MSC43-35	400	286.5	281.5	430 × 350	770
MSC43-45	400	386.5	381.5	430 × 450	1,040

MSCL series L-BRACKET for MS

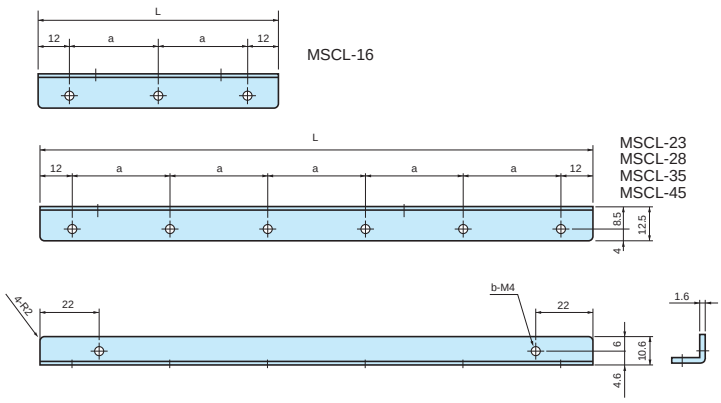

■ Use with your original mounting plate or PCB.

■ 1 pair of L-bracket are included with each MSC mounting plate.

Components

Part name	Material	Color / Finish
L-bracket	Steel SPCC	Trivalent chromate

Product no. / Dimensions

Product no.	L	a	b	Sales unit
MSCL-16	91.5	33.75	5	1 set (2 pcs)
MSCL-23	161.5	27.5	8	1 set (2 pcs)
MSCL-28	211.5	37.5	8	1 set (2 pcs)
MSCL-35	281.5	51.5	8	1 set (2 pcs)
MSCL-45	381.5	71.5	8	1 set (2 pcs)

TL series TILT LEG

TL dimensions

■ DXF/DWG/PDF drawings available on our website.

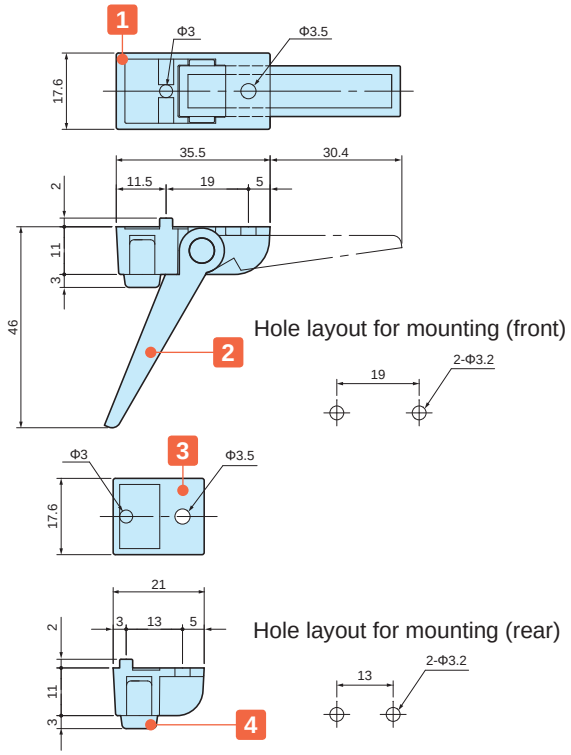

Components

＊Maximum load = 7 kg

No.	Part name	Pcs	Material	Color / Finish
1	Front feet	2	ABS UL94HB	Black • Gray • Light gray
2	Leg	2	ABS UL94HB	Black • Gray • Light gray
3	Rear feet	2	ABS UL94HB	Black • Gray • Light gray
4	Rubber feet	4	EPDM	Gray • Black
–	Screw	4	Steel	Black trivalent chromate

■ Included screws: M3-8 and M3 nut (with washer) set.

Product no. / Dimensions

Product no.	Color (body)	Color (rubber feet)	Sales unit
● TL-45BB	Black	Black	1 set
● TL-45GG	Gray	Gray	1 set
● TL-45SG	Light gray	Gray	1 set

■ EPDM (black) may have its color migrate onto the placement surface.

MS SERIES INSTALLATION AREA

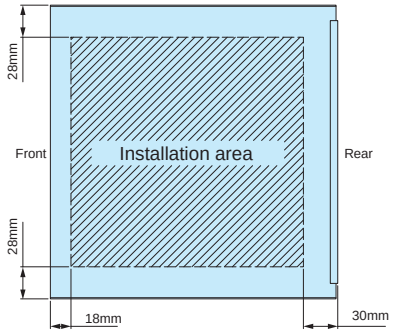

CBF-1G CABLE HOOK

APPLICATION EXAMPLE

■ Used for wrapping and securing cords and wires.
■ Can be used with a variety of different enclosure series and models.
■ Requires a panel thickness of between 1.0 ~ 3.0mm.

Product no. / Dimensions

Product no.	Material	Color	Pack of
CBF-1G	ABS UL94HB	Gray	4

■ Included screws: M3-8 trivalent chromate (with washer) x 4 pcs

CBF dimensions

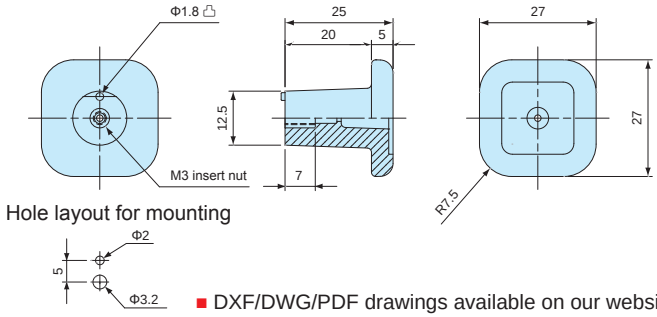

■ DXF/DWG/PDF drawings available on our website.

AFS•AFM series ALUMINIUM ISOLATION FEET

- The surface treatment and finish allows the feet to exhibit a polished and luxurious feel.
- Non-slip NBR O-ring is present on the underside of the feet.
- Suitable for use in audio devices.

Available in both internal and external screw installation type.

External type / Shot blast finish (AFS series)

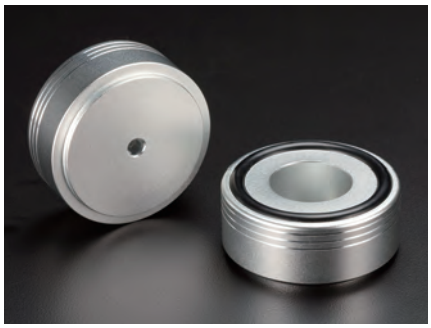

The external type is secured via screws from the underside / base of the feet to the enclosure.
A thread hole is required for direct securing, while a circular hole is required for lock nut securing.

The shot blast finish provides a high quality surface finish look, and pairing well with various types of enclosure surfaces.

Available in both silver and black.

Internal type / Reflective finish (AFM series)

The internal type is secured via screws from the inside of the enclosure. A circular hole is required for securing into the pre-made threads in the top-side of the feet.

The reflective surface finish adds a high quality touch to the unit, allow it to have a luxurious look.

Available only in Silver.

Product no. / Dimensions

Product no.		D	H	Installation type	C	a	b	Pack of
● Silver	● Black							
AFS20- 8S	AFS20- 8B	20	8	External	Φ3.4	3	9	4
AFS25-10S	AFS25-10B	25	10	External	Φ4.5	4	12	4
AFS30-12S	AFS30-12B	30	12	External	Φ4.5	5	12	4
AFS35-14S	AFS35-14B	35	14	External	Φ4.5	5	12	4
AFS39-16S	AFS39-16B	39	16	External	Φ4.5	5	15	4
AFS44-18S	AFS44-18B	44	18	External	Φ4.5	5	20	4
AFS55-20S	AFS55-20B	55	20	External	Φ5.5	5	20	4
AFM15- 7S	–	15	7	Internal	M3	4	–	4
AFM20- 9S	–	20	9	Internal	M3	5	–	4
AFM25-12S	–	25	12	Internal	M4	7	–	4
AFM30-14S	–	30	14	Internal	M4	8	–	4
AFM35-16S	–	35	16	Internal	M4	10	–	4
AFM39-18S	–	39	18	Internal	M4	10	–	4
AFM44-20S	–	44	20	Internal	M4	10	–	4
AFM55-22S	–	55	22	Internal	M5	15	–	4

AFS • AFM dimensions

■ DXF/DWG/PDF/STP drawings available on our website.

AFS SERIES

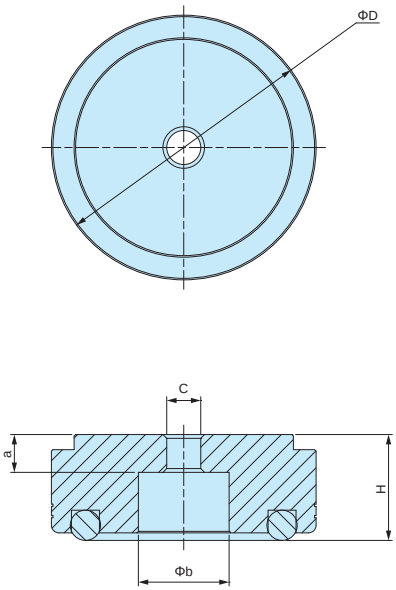

AFM SERIES

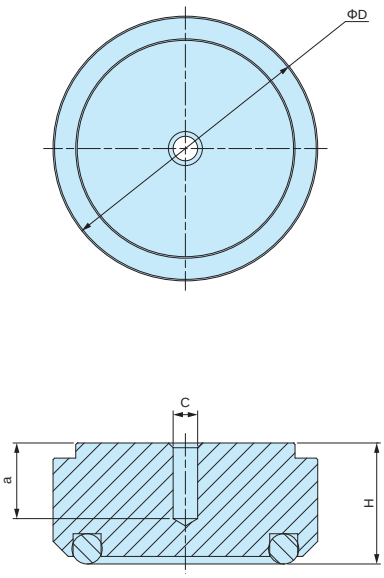

APPLICATION EXAMPLE

RS series PLATED PLASTIC FEET

- Suitable for audio equipment use.
- Elastomeric foam pad can be found at the underside of the feet.

RS dimensions

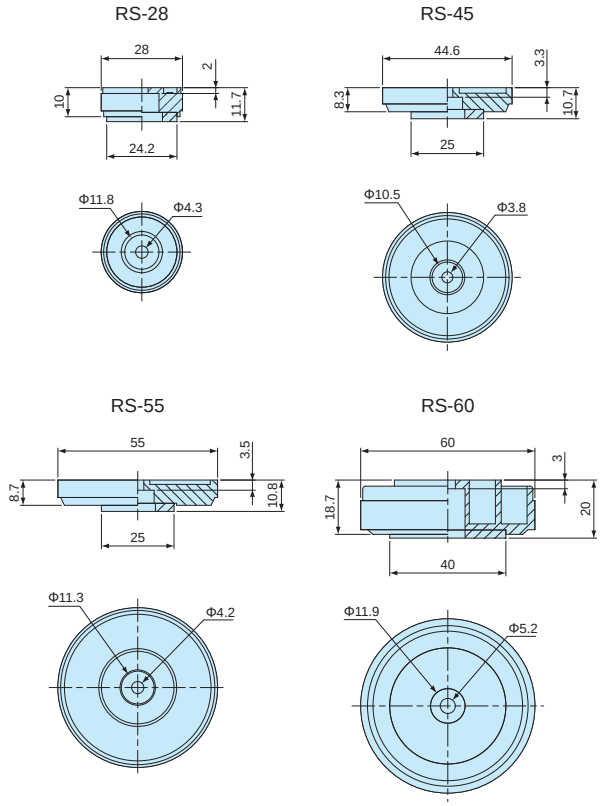

- DXF/DWG/PDF drawings available on our website.

Product no. / Dimensions

Product no.		Material	Pack of
Silver	Gold		
RS-28S	RS-28G	ABS UL94HB / Polyester / EVA	4
RS-45S	RS-45G	ABS UL94HB / Polyester / EVA	4
RS-55S	RS-55G	ABS UL94HB / Polyester / EVA	4
RS-60S	RS-60G	ABS UL94HB / Polyester / EVA	4

TC series ALUMINIUM FEET

- Aluminium material gives it a refined and elegant look.
- Suitable for audio equipment use.
- Elastomeric foam pad can be found on the underside of the feet.

TC dimensions

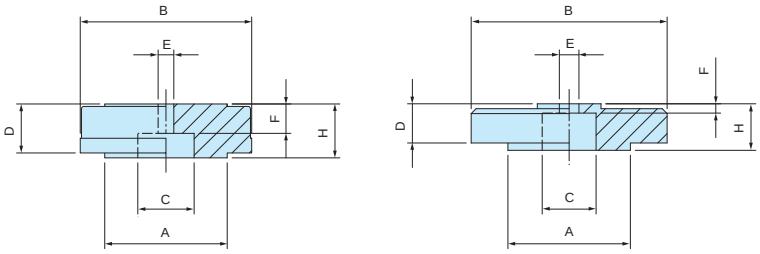

TC–1 TC–2 • TC-3

- DXF/DWG/PDF drawings available on our website.

Product no. / Dimensions

Product no.		A	B	C	D	E	F	H	Material	Pack of
Silver	Gold									
TC-1S	TC-1G	25	35	11.5	9.7	3.4	5.6	11.5	ABS UL94HB / Aluminium / EVA	4
TC-2S	TC-2G	25	40	11	10.4	4.1	2.4	12.5	ABS UL94HB / Aluminium / EVA	4
TC-3S	TC-3G	25	45	11.7	13	4.2	7.5	15	ABS UL94HB / Aluminium / EVA	4

TB series ADHESIVE RUBBER FEET

■ Adhesive is present on the underside.

Product no. / Dimensions

■ Material : Rubber

Product no.			A	H	Pack of
● Black*	● White gray	● White			
TB- 7	–	–	6.7	4.2	10
TB- 8	–	TB- 8W	8	2.6	10
TB-10	–	–	10	2.8	10
TB-12	–	TB-12W	11.3	5.6	10
TB-14	–	–	14	8	10
TB-16	–	TB-16W	15.9	8	10
TB-21	–	–	21.6	8.5	10
TB-27	TB-27G	–	27.8	7.4	10

* No color code denotation required

TB dimensions

■ DXF/DWG/PDF drawings available on our website.

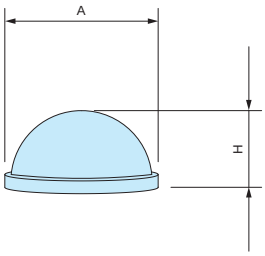

SJ-P series POLYURETHANE RUBBER FEET

■ Adhesive is present on the underside.

SJ-P dimensions

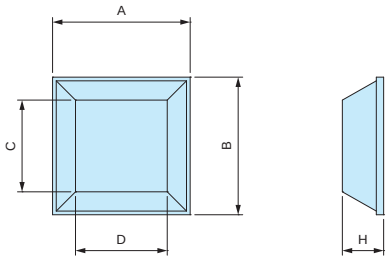

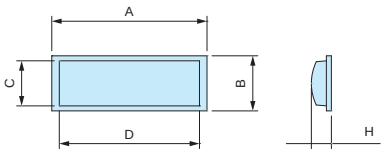

SJ-P1011

Product no. / Dimensions

■ Material / Color : Polyurethane / Black

Product no.	A	B	H	C	D	Pack of
SJ-P5007	10.4	10.4	2.5	7.5	7.5	10
SJ-P5008	12.7	12.7	3	9.5	9.5	10
SJ-P5018	12.7	12.7	5.8	7	7	10
SJ-P1004	15	15	4.5	10	10	10
SJ-P5023	20.6	20.6	7.6	12.7	12.7	10
SJ-P1011	15.5	5.5	2	4.5	14.5	10

■ DXF/DWG/PDF drawings available on our website.

TD series DIECAST ALUMINIUM BOX

Conductive

- Tough diecast aluminium box.
- Available in 12 sizes and 2 color types.
- Black painted and unfinished boxes are available.
- Recommended for electric guitar effect pedals.
- Conductivity can be achieved by utilization of the contact between the unfinished inner surfaces (only applicable to "N" type).

Components

No.	Part name	Pcs	Material	Color / Finish
1	Cover	1	Diecast aluminium ADC12	Black / Painted • Natural / Unfinished
2	Base	1	Diecast aluminium ADC12	Black / Painted • Natural / Unfinished
3	Screw	4	Steel M3.5 flat head	Black trivalent chromate • Nickel plated

TD dimensions

■ DXF/DWG/PDF drawings available on our website.

TD 4- 6-3
4- 9-3
5- 8-3
6-11-3
7-10-3
9-12-4
10-13-4
10-15-4
12-18-5

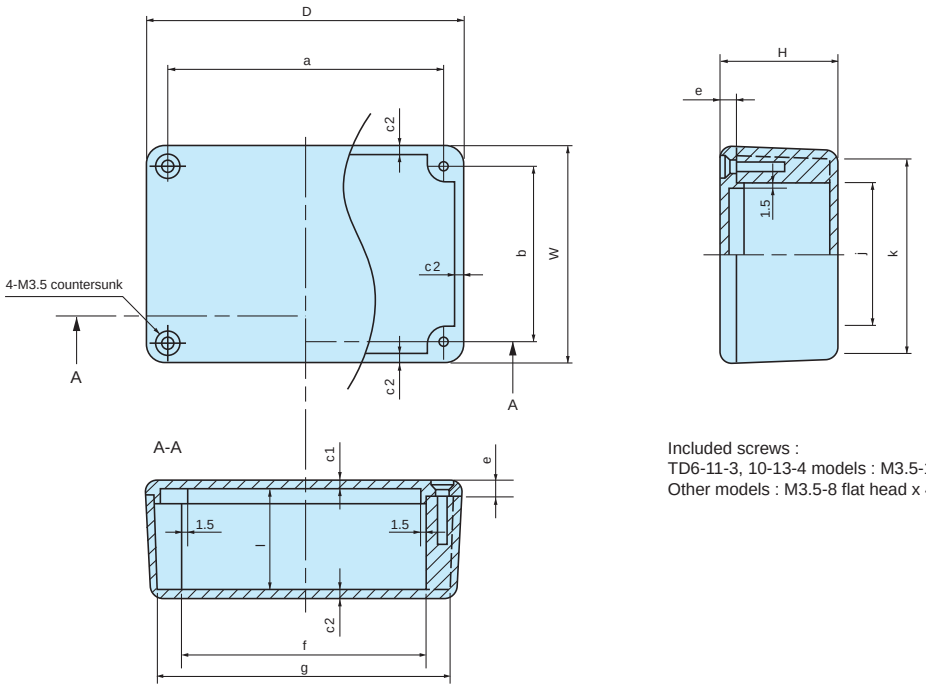

Included screws :
TD6-11-3, 10-13-4 models : M3.5-10 flat head x 4 pcs
Other models : M3.5-8 flat head x 4 pcs

TD 6- 6-4
8- 8-4
11-11-5

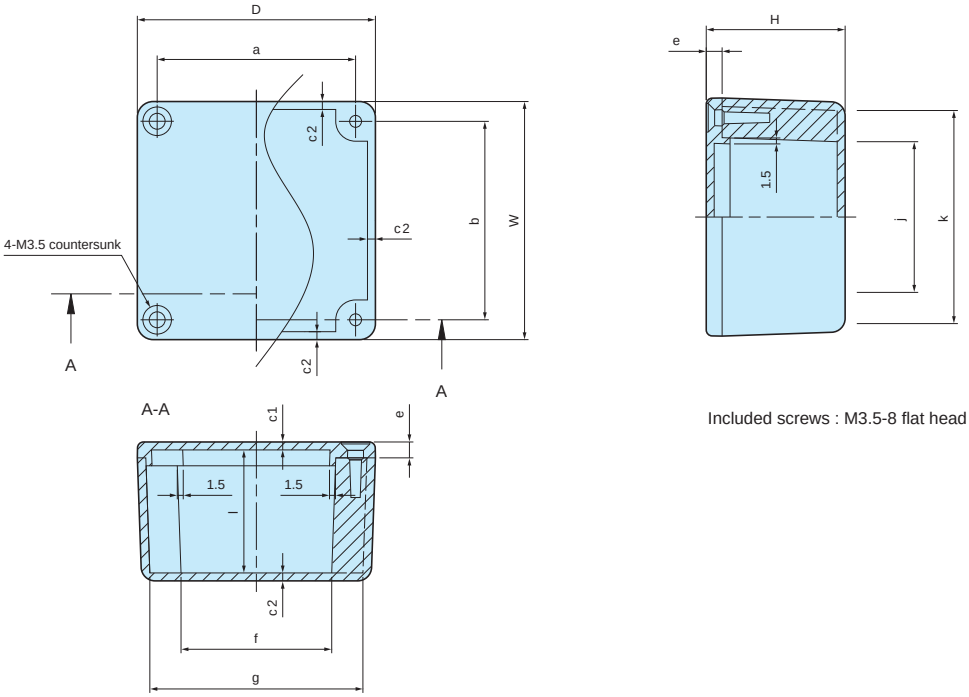

Included screws : M3.5-8 flat head x 4 pcs

Product no. / Dimensions

Product no.		W	H	D	a	b	c1	c2	e	f	g	j	k	l	Weight (g)
● Black	○ Natural Conductive														
TD 4- 6-3B	TD 4- 6-3N	40	27	60	50	30	2	2	4	39.5	53.5	20	33.5	23	56
TD 4- 9-3B	TD 4- 9-3N	40.5	32	94.5	84.5	30.5	2.25	2.25	4	74.5	87	20.5	33	27.5	97
TD 5- 8-3B	TD 5- 8-3N	55	30.5	80	70	45	2	2	4.5	58.5	72.5	33.5	47.5	26	95
TD 6- 6-4B	TD 6- 6-4N	60	35	60	50	50	2	2	4	37	51	37	51	31	90
TD 6-11-3B	TD 6-11-3N	64.5	31.8	115.5	105	54	2.25	2.25	4.25	92.5	106.5	42	55.5	27	164.5
TD 7-10-3B	TD 7-10-3N	70	32.5	100	90	60	2.5	2	4.5	78	92	48	62	28	135
TD 8- 8-4B	TD 8- 8-4N	80	40	80	70	70	2	2	4	56.5	70.5	56.5	70.5	36	145
TD 9-12-4B	TD 9-12-4N	85	35	120	110	75	2	2	4	98.5	112	63.5	77	31	185
TD10-13-4B	TD10-13-4N	95.5	37.8	130.5	120	85	2.25	2.25	4.25	107.5	121	72.5	86	33	263
TD10-15-4B	TD10-15-4N	100	40	150	140	90	2.5	2.5	4	128.5	142	78	92	35	320
TD11-11-5B	TD11-11-5N	110	45	110	100	100	2.5	2.5	4	86	99	86	99	41	280
TD12-18-5B	TD12-18-5N	120	50	180	170	110	2.5	2.5	4	156	171	97.5	110	45	455

BDN series IP67 DIECAST ALUMINIUM BOX

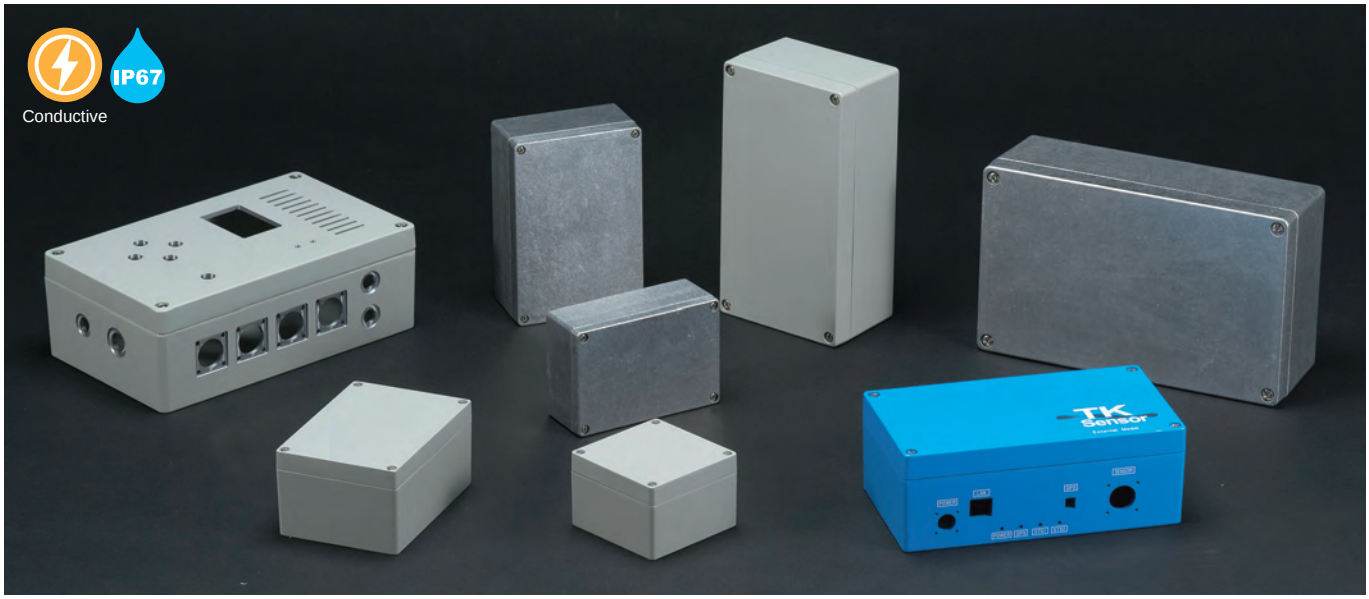

Technical Data

Protection class: IP67
Operating temperature: -40°C ~ +105°C
Recommended torque: 1.0N • m (10kgf • cm)

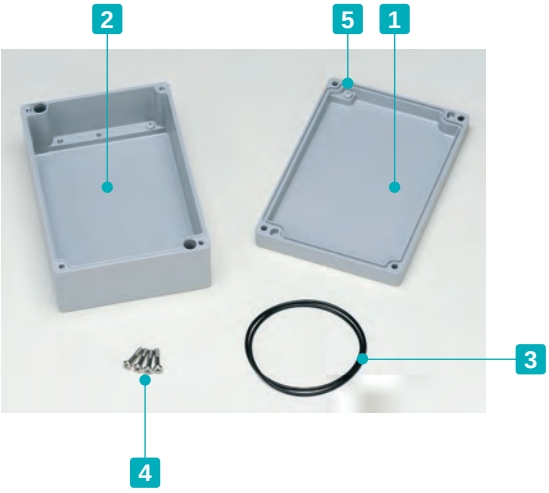

- 8 different sizes available for both light gray powder coated and unfinished models.
- O-ring gasket is good for maintaining both waterproof and dustproof functionality.
- Shock resistant diecast aluminium box.
- Conductivity can be achieved by utilization of the contact between the unfinished inner surfaces (only applicable to "N" type).

Components

No.	Part name	Pcs	Material	Color / Finish
1	Top cover	1	Diecast aluminium ADC12	Light gray / Powder coated • Natural / Unfinished
2	Base	1	Diecast aluminium ADC12	Light gray / Powder coated • Natural / Unfinished
3	O-ring gasket	1	Silicone	Black
4	Screw	4	Stainless steel	Unfinished
5	Earthing screw	2	Steel M4-5 pan head	Nickel plated

Accessories (Optional parts)

Wall mounting bracket CK series
See website

Mounting plate FTB series
See website

Pole mounting bracket SSK series
See website

DIN-Rail FDR series
See website

Cable gland
See page 333 ~ 340

BDN dimensions

■ DXF/DWG/PDF drawings available on our website.

BDN 6-8-5

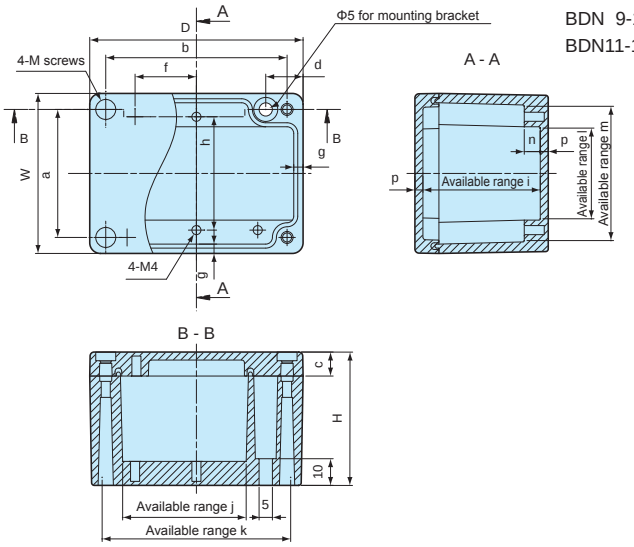

BDN 7-10-4
BDN 9-13-5
BDN11-16-6

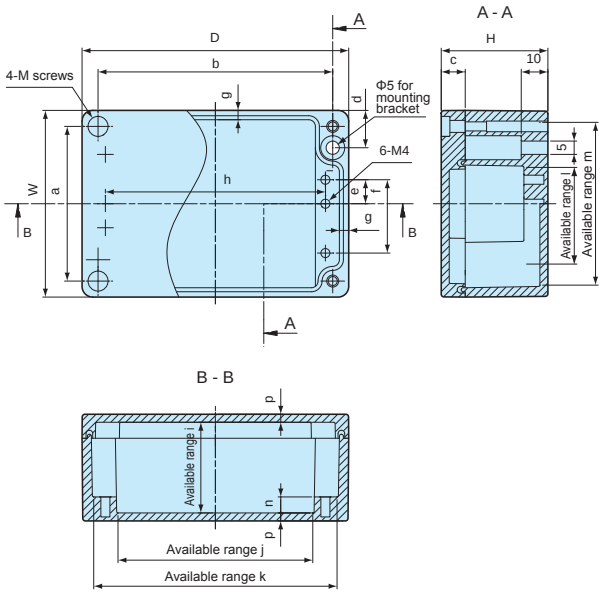

BDN 9- 9-6
BDN10-14-7
BDN12-22-8
BDN16-26-9

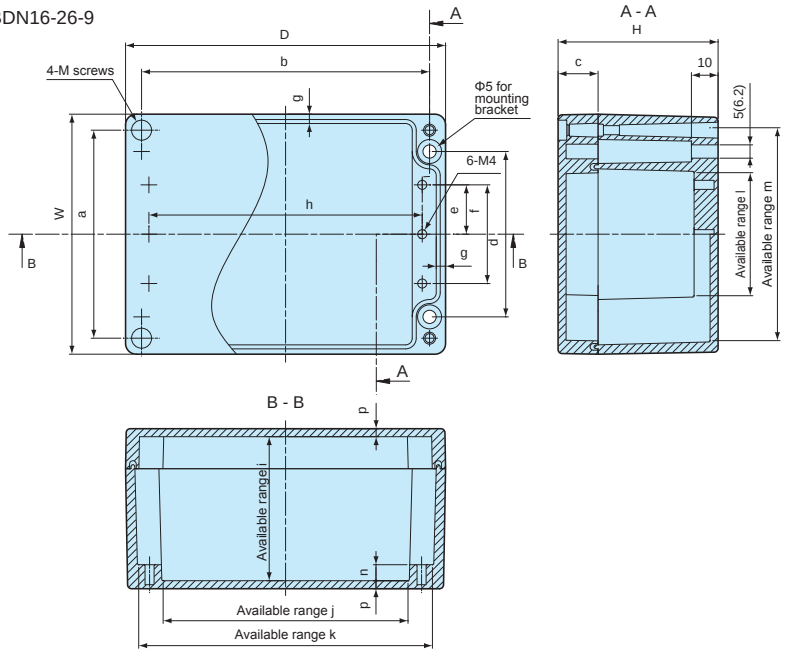

※Dimension in ( ) = BDN12-22-8
BDN16-26-9

Product no. / Dimensions

Product no.		Dimensions						Weight (g)
● Light gray	○ Natural Conductive	W	D	H	a	b	c	
BDN 6- 8-5G	BDN 6- 8-5N	60	80	50	48	68	9	240
BDN 7-10-4G	BDN 7-10-4N	70	100	40	58	88	9	250
BDN 9- 9-6G	BDN 9- 9-6N	90	90	60	78	78	15	395
BDN 9-13-5G	BDN 9-13-5N	90	130	50	78	118	9	420
BDN10-14-7G	BDN10-14-7N	100	140	70	88	128	15	635
BDN11-16-6G	BDN11-16-6N	110	160	60	98	148	15	640
BDN12-22-8G	BDN12-22-8N	120	220	80	105	205	20	1,155
BDN16-26-9G	BDN16-26-9N	160	260	90	140	240	20	2,145

Product no.		Dimensions												
● Light gray	○ Natural Conductive	d	e	f	g	h	i	j	k	ℓ	m	n	p	M
BDN 6- 8-5G	BDN 6- 8-5N	14	–	23	3.5	42.5	44	45	71	33	51	6	3	M4
BDN 7-10-4G	BDN 7-10-4N	14	11	31	3	85	34	75	92.5	38	62.5	6	3	M4
BDN 9- 9-6G	BDN 9- 9-6N	62	18.5	37	3.5	72	54	62	80	45	80	6	3	M4
BDN 9-13-5G	BDN 9-13-5N	14	19	47.5	3.5	112.5	44	104	121	56	81	6	3	M4
BDN10-14-7G	BDN10-14-7N	72	24	48	3.5	121	64	111	130	56	90	6	3	M4
BDN11-16-6G	BDN11-16-6N	14	29	67.5	3.5	142.5	54	134	151	76	101	6	3	M4
BDN12-22-8G	BDN12-22-8N	84.6	28	56	3.9	196	74	183	206	62	105	6	3	M5
BDN16-26-9G	BDN16-26-9N	110	36	72	4.8	230	82	216	247	87	146	9	4	M6

IP65 LATCH-HINGED PLASTIC BOX

Stainless steel and plastic mounting brackets are available.
See page 320

BCAR • BCPR series comes with an attachable BRF series outdoor roof.
See page 309 ~ 310 and 315 ~ 316

Pole mounting bracket for pole installation
See page 321 ~ 324

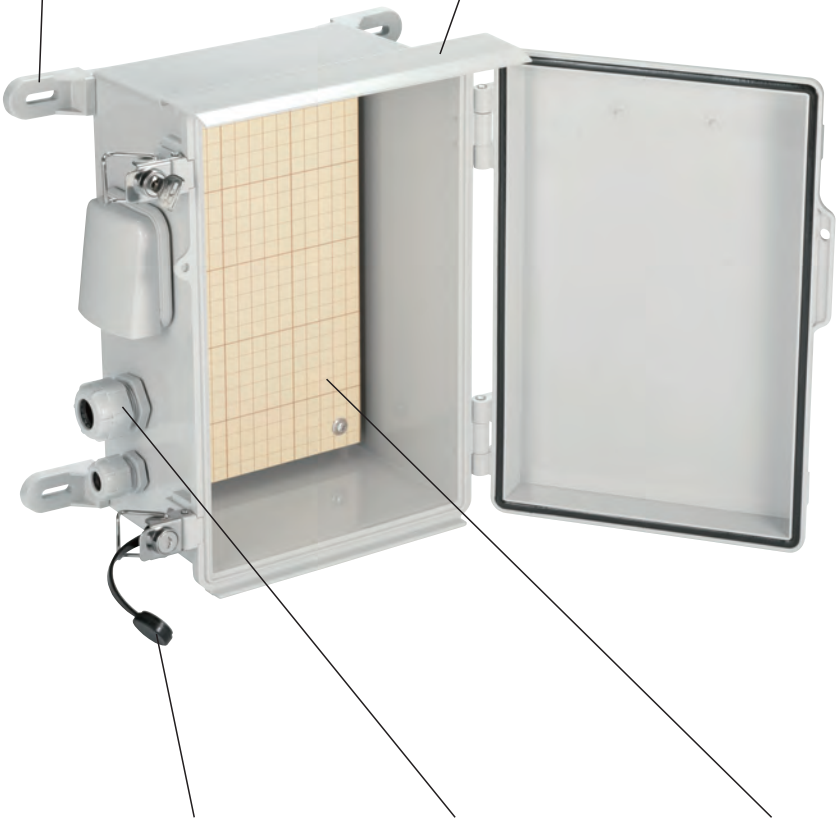

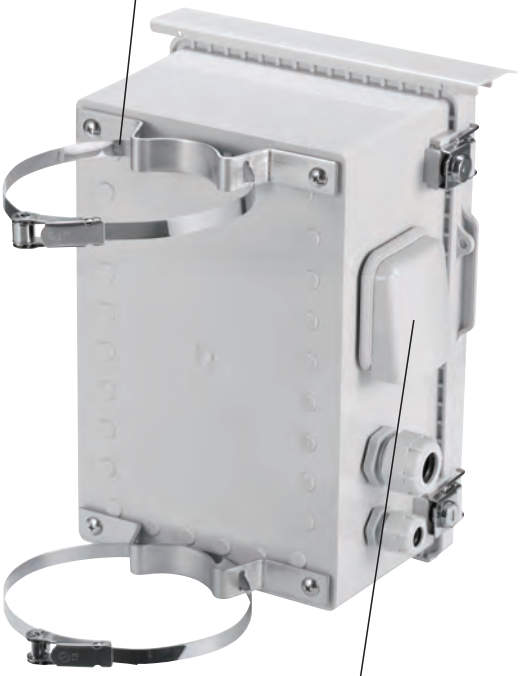

Dust protection cap (for lock/key type)
See page 316

Cable gland
For waterproofing enclosure openings for cables and wires
See page 333 ~ 340

Mounting plate
3 types of mounting plates are available (plastic / steel / wood)
See page 317 ~ 319

Ventilation cover
For heat dissipation and prevention of condensation build-up
See page 328

APPLICATION EXAMPLE

Universal plastic enclosure series suitable for a wide range of applications such as FA/control, electrical switchboard, network communication and so on.

Outdoor WiFi Spot

Product by Spectra Quest Lab. (Japan)

Solar Power Junction Box

Product by Kansai Denki (Japan)

Power Switchboard Box

IoT Sensor Data Logger for Agriculture

Product by Nishimu Electronics Industries (Japan)

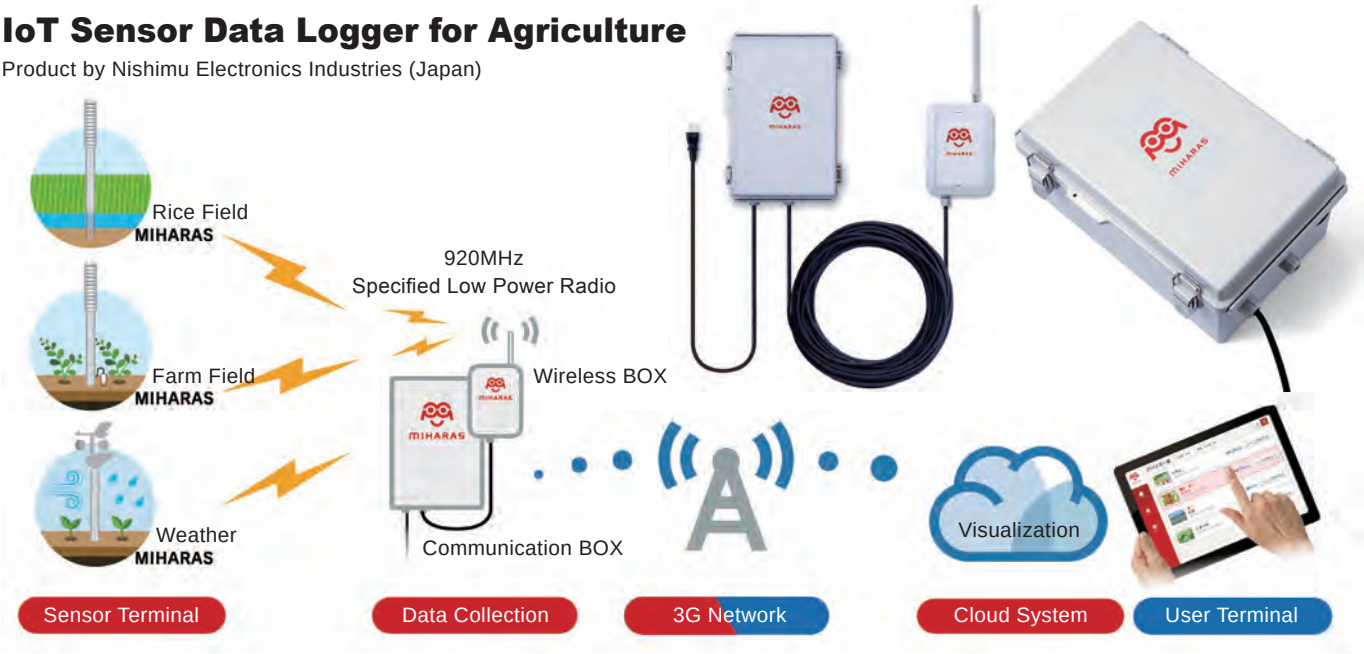

Environmental Data Measurement and Controller Unit

Product by eSOL (Japan)

"SenSu" Communication Unit with Sensor

Product by DATA TECHNOLOGY (Japan)

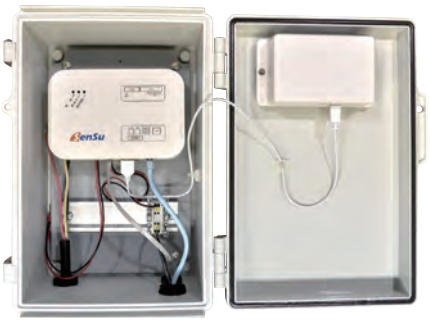

Network Sensor System for Agriculture

Product by CM Engineering (Japan)

Wildlife Damage Monitoring System

Product by CM Engineering (Japan)

Valve Controller

Product by EXEN (Japan)

Building Surveillance Unit

Product by Showa Denki (Japan)

Digital Pressure Gauge

Product by KRONE CORPORATION (Japan)

Radiation Monitor

Anemometer

Product by Fieldpro (Japan)

Water Gauge

Product by Fieldpro (Japan)

Monitoring Camera

Product by ACE PROMOTION (Japan)

BCAP series — IP65 LATCH-HINGED ABS PLASTIC BOX

NEW SIZE

BCPC series — IP65 LATCH-HINGED POLYCARBONATE PLASTIC BOX

NEW SIZE

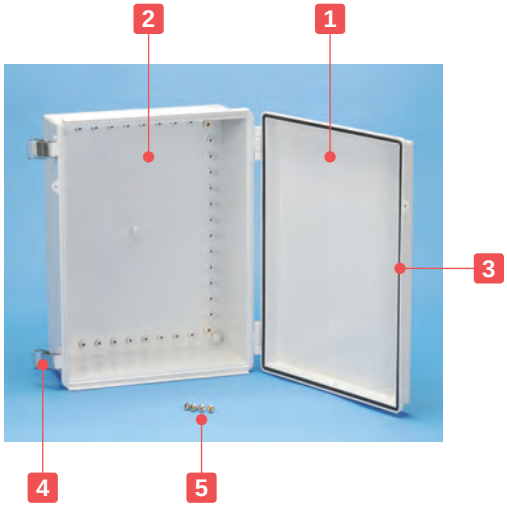

IP65

Technical Data

Protection class: IP65
Operating temperature:
BCAP -10°C ~ +60°C
BCPC -20°C ~ +75°C

- UL mark is only applicable for BCPC series.

- IP65 latch-hinged box for easy opening and closing.
- 50 different sizes available.
- Applicable for various uses in fields such as FA, network communication, power switch controls and so on.
- BCAP series is made of white gray ABS with 2 different cover types (white gray ABS and transparent polycarbonate) available.
- BCPC series is made of light gray UL94V-0 polycarbonate, which has good heat resistant properties.

Components : BCAP series

No.	Part name	Pcs	Material	Color / Finish
1	Top cover	1	ABS UL94HB • Polycarbonate UL94V-0	White gray • Transparent
2	Base	1	ABS UL94HB	White gray
3	Gasket	1	Polyurethane	Black
4	Latch	1 ~ 3	Stainless steel	Unfinished
5	Screw for mounting plate	2 ~ 8	Steel	Trivalent chromate

- Stainless steel mounting brackets are included together with the following models : 506018, 506025, 507018, 507025, 608018, and 608028.

Components : BCPC series

No.	Part name	Pcs	Material	Color / Finish
1	Top cover	1	Polycarbonate UL94V-0	Light gray
2	Base	1	Glass fiber filled polycarbonate UL94V-0	Light gray
3	Gasket	1	Polyurethane	Black
4	Latch	1 ~ 3	Stainless steel	Unfinished
5	Screw for mounting plate	2 ~ 8	Steel	Trivalent chromate

- Stainless steel mounting brackets are included together with the following models : 506018, 506025, 507018, 507025, 608018, and 608028.

Color Type

Color code	Top cover color / Material	Base color / Material
BCAP G	White gray / ABS	White gray / ABS
BCAP T	Transparent / Polycarbonate	White gray / ABS
BCPC S	Light gray / Polycarbonate	Light gray / Glass fiber filled polycarbonate

■ Please suffix color code at the end of the product number.

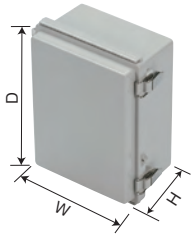

BCAP Product no. / Dimensions

Product no.	W	D	H	Weight (g) G	Weight (g) T
BCAP091207□	90	120	70	196	204
BCAP091208□	90	120	85	212	221
BCAP101507□	100	150	70	272	281
BCAP101508□	100	150	85	291	300
BCAP112107□	110	210	75	359	378
BCAP112110□	110	210	100	422	420
BCAP112607□	110	260	75	431	446
BCAP112610□	110	260	100.5	484	500
BCAP131508□	135	155	85	356	357
BCAP131808□	135	185	85.5	381	410
BCAP131810□	135	185	100.5	396	402
BCAP151509□	150	150	90	343	353
BCAP151512□	150	150	120.5	411	425
BCAP162110□	160	210	100	468	486
BCAP162113□	160	210	130	517	537
BCAP162610□	160	260	100	577	601
BCAP162613□	160	260	130	673	701
NEW BCAP172210□	170	220	105	545	581
BCAP172711□	170	270	110.5	670	680
BCAP192810□	190	280	100.5	722	746
BCAP192814□	190	280	141	877	901
NEW BCAP203013□N	200	300	130	921	954
NEW BCAP203015□N	200	300	150	989	1,022
NEW BCAP203018□N	200	300	180	1,110	1,143
BCAP212110□	210	210	100	630	656
BCAP212113□	210	210	130	704	726
NEW BCAP253515□N	250	350	150	1,278	1,320
NEW BCAP253518□N	250	350	180	1,415	1,456
BCAP282813□	280	280	130.5	1,167	1,200
BCAP283813□	280	380	130	1,455	1,512
BCAP303015□	300	300	151	1,339	1,418
BCAP303018□	300	300	181	1,495	1,576
BCAP304012□	300	400	120	1,508	1,575
BCAP304015□	300	400	150	1,563	1,675
BCAP304018□	300	400	181	1,719	1,853
BCAP353515□	350	350	150	1,693	1,764
BCAP353518□	350	350	181	1,845	1,906
BCAP354512□	350	450	120	2,068	2,167
BCAP354516□	350	450	160	2,382	2,514
BCAP354520□	350	450	201	2,646	2,794
BCAP405016□	400	500	160	2,660	2,839
BCAP405020□	400	500	201	3,119	3,232
BCAP406018□	400	600	181	3,542	3,652
BCAP406023□	400	600	231	3,870	4,044
BCAP506018□	530	630	185	5,438	5,611
BCAP506025□	530	630	255	6,078	6,273
BCAP507018G	530	730	188	6,241	–
BCAP507025G	530	730	255	6,911	–
BCAP608018G	630	830	188	8,131	–
BCAP608028G	630	830	288	9,570	–

■ BCAP507018, 507025, 608018, and 608028 models are only available as G color type.

BCPC Product no. / Dimensions

Product no.	W	D	H	Weight (g)
BCPC091207S	90	120	70	226
BCPC091208S	90	120	85	247
BCPC101507S	100	150	70	312
BCPC101508S	100	150	85	336
BCPC112107S	110	210	75	420
BCPC112110S	110	210	100	473
BCPC112607S	110	260	75	493
BCPC112610S	110	260	100.5	569
BCPC131508S	135	155	85	406
BCPC131808S	135	185	85.5	452
BCPC131810S	135	185	100.5	448
BCPC151509S	150	150	90	395
BCPC151512S	150	150	120.5	482
BCPC162110S	160	210	100	556
BCPC162113S	160	210	130	611
BCPC162610S	160	260	100	671
BCPC162613S	160	260	130	779
NEW BCPC172210S	170	220	105	642
BCPC172711S	170	270	110.5	775
BCPC192810S	190	280	100.5	858
BCPC192814S	190	280	141	1,028
NEW BCPC203013SN	200	300	130	1,070
NEW BCPC203015SN	200	300	150	1,150
NEW BCPC203018SN	200	300	180	1,295
BCPC212110S	210	210	100	742
BCPC212113S	210	210	130	827
NEW BCPC253515SN	250	350	150	1,485
NEW BCPC253518SN	250	350	180	1,648
BCPC282813S	280	280	130.5	1,371
BCPC283813S	280	380	130	1,695
BCPC303015S	300	300	151	1,610
BCPC303018S	300	300	181	1,760
BCPC304012S	300	400	120	1,846
BCPC304015S	300	400	150	1,862
BCPC304018S	300	400	181	2,030
BCPC353515S	350	350	150	2,045
BCPC353518S	350	350	181	2,142
BCPC354512S	350	450	120	2,397
BCPC354516S	350	450	160	2,826
BCPC354520S	350	450	201	3,151
BCPC405016S	400	500	160	3,188
BCPC405020S	400	500	201	3,811
BCPC406018S	400	600	181	4,153
BCPC406023S	400	600	231	4,637
BCPC506018S	530	630	185	6,305
BCPC506025S	530	630	255	7,213
BCPC507018S	530	730	188	7,410
BCPC507025S	530	730	255	8,200
BCPC608018S	630	830	188	9,820
BCPC608028S	630	830	288	11,550

■ Refer to page 311 ~ 314 for detailed dimensions.

Accessories (Optional parts)

Mounting plate BMP series
See page 317 ~ 319

Mounting bracket CK • BFL series
See page 320

Pole mounting bracket SSK series
See page 321 ~ 322

Cable gland
See page 333 ~ 340

Ventilation parts
See page 325 ~ 328

BCPK series IP65 POLYCARBONATE PLASTIC BOX with LOCK

NEW SIZE

Transparent cover type is available as BTO (Built-to-order) with an estimated lead-time of around 2 months. See website for more details.

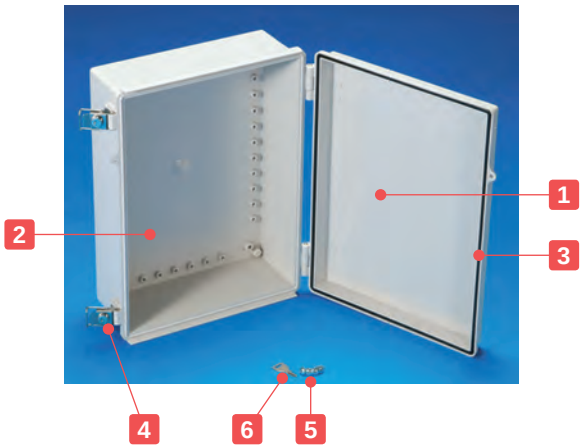

IP65

Technical Data

Protection class : IP65
Operating temperature: -20°C ~ +75°C

*Lock types vary according to box size.

Box size
BCPK091207 ~ 172711
BCPK212110, 212113

Box size
BCPK192810 ~ 203018
BCPK253515 ~ 608028

- Lockable enclosure best used for tamper prevention in FA, control box, and network communication fields.
- BCPK polycarbonate box is resistant against heat and flames. 50 different sizes available.

Components

No.	Part name	Pcs	Material	Color / Finish
1	Top cover	1	Polycarbonate UL94V-0	Light gray
2	Base	1	Glass fiber filled polycarbonate UL94V-0	Light gray
3	Gasket	1	Polyurethane	Black
4	Latch	1 ~ 3	Stainless steel	Unfinished
5	Screw for mounting plate	2 ~ 8	Steel	Trivalent chromate
6	Key	1 ~ 2	Diecast zinc • Brass	Chrome plated • Nickel plated

- Stainless steel mounting brackets are included together with the following models : 506018, 506025, 507018, 507025, 608018, and 608028.
- Quantity of keys provided vary by the number of locks present.

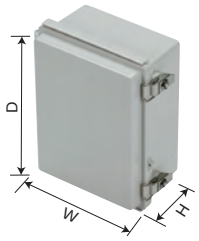

Product no. / Dimensions

	Product no.	W	D	H	Weight (g)
	BCPK091207S	90	120	70	242
	BCPK091208S	90	120	85	264
	BCPK101507S	100	150	70	339
	BCPK101508S	100	150	85	360
	BCPK112107S	110	210	75	437
	BCPK112110S	110	210	100	501
	BCPK112607S	110	260	75	520
	BCPK112610S	110	260	100.5	585
	BCPK131508S	135	155	85	430
	BCPK131808S	135	185	85.5	474
	BCPK131810S	135	185	100.5	471
	BCPK151509S	150	150	90	419
	BCPK151512S	150	150	120.5	507
	BCPK162110S	160	210	100	563
	BCPK162113S	160	210	130	630
	BCPK162610S	160	260	100	728
	BCPK162613S	160	260	130	805
NEW	BCPK172210S	170	220	105	664
	BCPK172711S	170	270	110.5	771
	BCPK192810S	190	280	100.5	875
	BCPK192814S	190	280	141	1,065
	BCPK203013S	200	300	130	1,090
NEW	BCPK203015SN	200	300	150	1,179
NEW	BCPK203018SN	200	300	180	1,324
	BCPK212110S	210	210	100	743
	BCPK212113S	210	210	130	822
	BCPK253515S	250	350	151	1,559
	BCPK253518S	250	350	181.5	1,670
	BCPK282813S	280	280	130.5	1,391
	BCPK283813S	280	380	130	1,811
	BCPK303015S	300	300	151	1,670
	BCPK303018S	300	300	181	1,782
	BCPK304012S	300	400	120	1,858
	BCPK304015S	300	400	150	1,912
	BCPK304018S	300	400	181	2,083
	BCPK353515S	350	350	150	2,067
	BCPK353518S	350	350	181	2,175
	BCPK354512S	350	450	120	2,442
	BCPK354516S	350	450	160	2,863
	BCPK354520S	350	450	201	3,156
	BCPK405016S	400	500	160	3,149
	BCPK405020S	400	500	201	3,725
	BCPK406018S	400	600	181	4,159
	BCPK406023S	400	600	231	4,639
	BCPK506018S	530	630	185	5,339
	BCPK506025S	530	630	255	7,136
	BCPK507018S	530	730	188	7,470
	BCPK507025S	530	730	255	8,260
	BCPK608018S	630	830	188	9,880
	BCPK608028S	630	830	288	11,610

■ Refer to page 311 ~ 314 for detailed dimensions.

Accessories (Optional parts)

Dust protection cap BCC series
See page 316

Mounting plate BMP series
See page 317 ~ 319

Mounting bracket CK • BFL series
See page 320

Cable gland
See page 333 ~ 340

Ventilation parts
See page 325 ~ 328

BCAR series — IP65 ABS PLASTIC BOX with OUTDOOR ROOF

NEW SIZE

BCPR series — IP65 POLYCARBONATE PLASTIC BOX with OUTDOOR ROOF

NEW SIZE

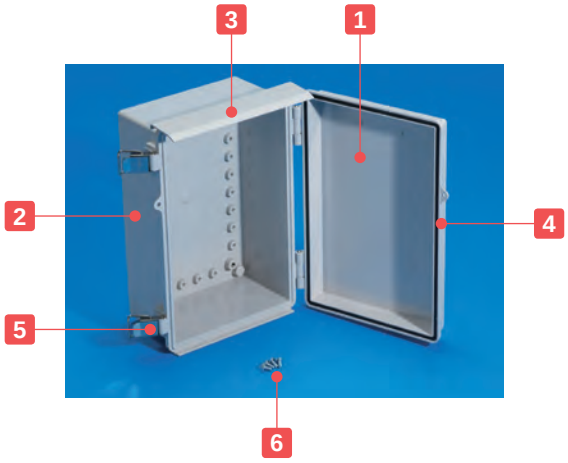

IP65

Technical Data

Protection class : IP65
Operating temperature:
BCAR -10°C ~ +60°C
BCPR -20°C ~ +75°C

- Suitable for outdoor use by equipping easy snap-on roof attachment.
- 44 different sizes available.
- Applicable for various uses in fields such as FA, network communication, power switch controls and so on.
- BCAR series is made of white gray ABS with 2 different cover types (white gray ABS and transparent polycarbonate) available.
- BCPR series is made of light gray UL94V-0 polycarbonate , which has good heat resistant properties.
- Transparent cover type is not available for BCAR507018, 507025, 608018, and 608028 models.

Components : BCAR series

No.	Part name	Pcs	Material	Color / Finish
1	Top cover	1	ABS UL94HB • Polycarbonate UL94V-0	White gray • Transparent
2	Base	1	ABS UL94HB	White gray
3	Roof	1	PVC	White gray
4	Gasket	1	Polyurethane	Black
5	Latch	1 ~ 3	Stainless steel	Unfinished
6	Screw for mounting plate	2 ~ 8	Steel	Trivalent chromate

■ Stainless steel mounting brackets are included together with the following models : 506018, 506025, 507018, 507025, 608018, and 608028.

Components : BCPR series

No.	Part name	Pcs	Material	Color / Finish
1	Top cover	1	Polycarbonate UL94V-0	Light gray
2	Base	1	Glass fiber filled polycarbonate UL94V-0	Light gray
3	Roof	1	PVC	Light gray
4	Gasket	1	Polyurethane	Black
5	Latch	1 ~ 3	Stainless steel	Unfinished
6	Screw for mounting plate	2 ~ 8	Steel	Trivalent chromate

■ Stainless steel mounting brackets are included together with the following models : 506018, 506025, 507018, 507025, 608018, and 608028.

Color Type

Color code	Top cover color / Material	Base color / Material
BCAR G	White gray / ABS	White gray / ABS
BCAR T	Transparent / Polycarbonate	White gray / ABS
BCPR S	Light gray / Polycarbonate	Light gray / Glass fiber filled polycarbonate

■ Please suffix color code at the end of the product number.

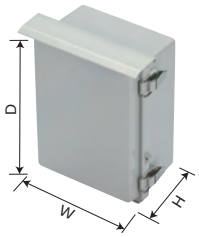

BCAR Product no. / Dimensions

Product no.	W	D	H	Weight (g)	
				G	T
BCAR091207□	90	120	70	213	220
BCAR091208□	90	120	85	228	237
BCAR101507□	100	150	70	291	300
BCAR101508□	100	150	85	309	318
BCAR112107□	110	210	75	379	398
BCAR112110□	110	210	100	442	440
BCAR112607□	110	260	75	451	466
BCAR112610□	110	260	100.5	504	519
BCAR131508□	135	155	85	379	381
BCAR131808□	135	185	85.5	404	434
BCAR131810□	135	185	100.5	420	426
BCAR162110□	160	210	100	495	513
BCAR162113□	160	210	130	544	564
BCAR162610□	160	260	100	605	629
BCAR162613□	160	260	130	701	729
NEW BCAR172210□	170	220	105	570	606
BCAR172711□	170	270	110.5	700	710
BCAR192810□	190	280	100.5	755	778
BCAR192814□	190	280	141	909	933
NEW BCAR203013□N	200	300	130	959	992
NEW BCAR203015□N	200	300	150	1,027	1,060
NEW BCAR203018□N	200	300	180	1,148	1,181
BCAR212110□	210	210	100	666	692
BCAR212113□	210	210	130	740	762
NEW BCAR253515□N	250	350	150	1,324	1,366
NEW BCAR253518□N	250	350	180	1,461	1,503
BCAR282813□	280	280	130.5	1,218	1,251
BCAR283813□	280	380	130	1,506	1,563
BCAR303015□	300	300	151	1,393	1,472
BCAR303018□	300	300	181	1,549	1,630
BCAR304012□	300	400	120	1,562	1,629
BCAR304015□	300	400	150	1,617	1,729
BCAR304018□	300	400	181	1,773	1,907
BCAR353515□	350	350	150	1,757	1,827
BCAR353518□	350	350	181	1,908	1,970
BCAR354512□	350	450	120	2,140	2,239
BCAR354516□	350	450	160	2,454	2,586
BCAR354520□	350	450	201	2,718	2,866
BCAR506018□	530	630	185	5,564	5,737
BCAR506025□	530	630	255	6,203	6,399
BCAR507018G	530	730	188	6,366	–
BCAR507025G	530	730	255	7,037	–
BCAR608018G	630	830	188	8,279	–
BCAR608028G	630	830	288	9,719	–

■ BCAR507018, 507025, 608018, and 608028 models are only available as G color type.

BCPR Product no. / Dimensions

Product no.	W	D	H	Weight (g)
BCPR091207S	90	120	70	242
BCPR091208S	90	120	85	264
BCPR101507S	100	150	70	330
BCPR101508S	100	150	85	354
BCPR112107S	110	210	75	439
BCPR112110S	110	210	100	493
BCPR112607S	110	260	75	513
BCPR112610S	110	260	100.5	589
BCPR131508S	135	155	85	429
BCPR131808S	135	185	85.5	475
BCPR131810S	135	185	100.5	471
BCPR162110S	160	210	100	583
BCPR162113S	160	210	130	638
BCPR162610S	160	260	100	699
BCPR162613S	160	260	130	806
NEW BCPR172210S	170	220	105	667
BCPR172711S	170	270	110.5	803
BCPR192810S	190	280	100.5	889
BCPR192814S	190	280	141	1,060
NEW BCPR203013SN	200	300	130	1,108
NEW BCPR203015SN	200	300	150	1,188
NEW BCPR203018SN	200	300	180	1,333
BCPR212110S	210	210	100	777
BCPR212113S	210	210	130	862
NEW BCPR253515SN	250	350	150	1,531
NEW BCPR253518SN	250	350	150	1,694
BCPR282813S	280	280	130.5	1,422
BCPR283813S	280	380	130	1,747
BCPR303015S	300	300	151	1,665
BCPR303018S	300	300	181	1,814
BCPR304012S	300	400	120	1,901
BCPR304015S	300	400	150	1,917
BCPR304018S	300	400	181	2,084
BCPR353515S	350	350	150	2,109
BCPR353518S	350	350	181	2,206
BCPR354512S	350	450	120	2,471
BCPR354516S	350	450	160	2,899
BCPR354520S	350	450	201	3,224
BCPR506018S	530	630	185	6,431
BCPR506025S	530	630	255	7,339
BCPR507018S	530	730	188	7,630
BCPR507025S	530	730	255	8,420
BCPR608018S	630	830	188	10,040
BCPR608028S	630	830	288	11,770

■ Refer to page 311 ~ 314 for detailed dimensions.

Accessories (Optional parts)

Mounting plate BMP series
See page 317 ~ 319

Mounting bracket CK • BFL series
See page 320

Pole mounting bracket SSK series
See page 321 ~ 322

Cable gland
See page 333 ~ 340

Ventilation parts
See page 325 ~ 328

BCAP • BCPC • BCPK • BCAR • BCPR dimensions

■ DXF/DWG/PDF drawings available on our website.

091207 • 091208

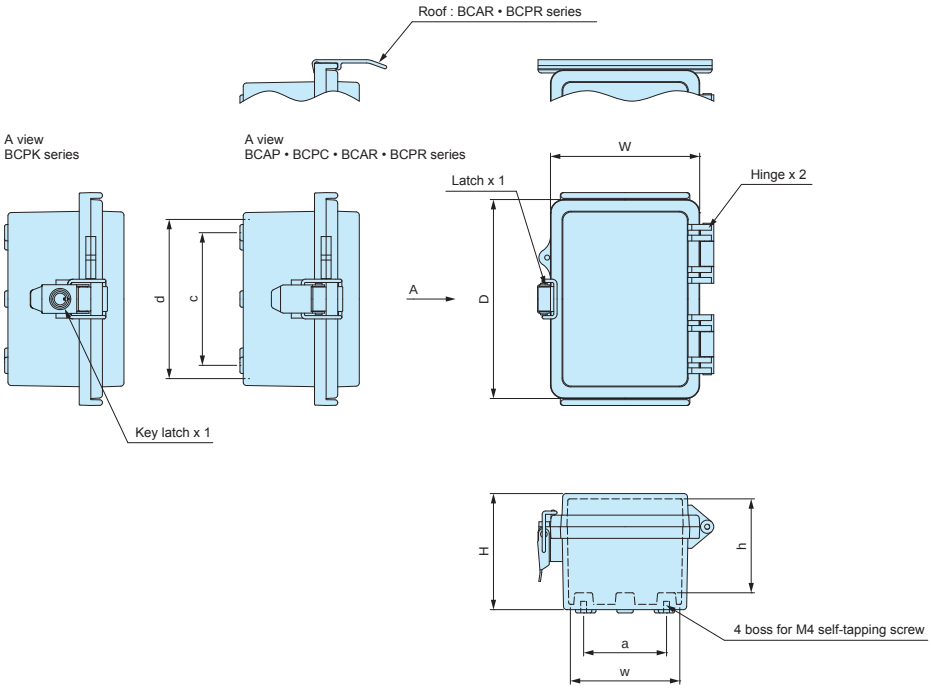

■ K = BCPK series, R = BCAR • BCPR series.

Product no.	W	D	H	Available range			Bottom hole pitch	
				w	d	h	a	c
BCAP • R, BCPC • K • R091207	90	120	70	66	96	56.5	50	80
BCAP • R, BCPC • K • R091208	90	120	85	66	96	71.5	50	80

101507 ~ 405020

※ Not available for BCAR • BCPR 151509, 151512, 405016, and 405020 models.

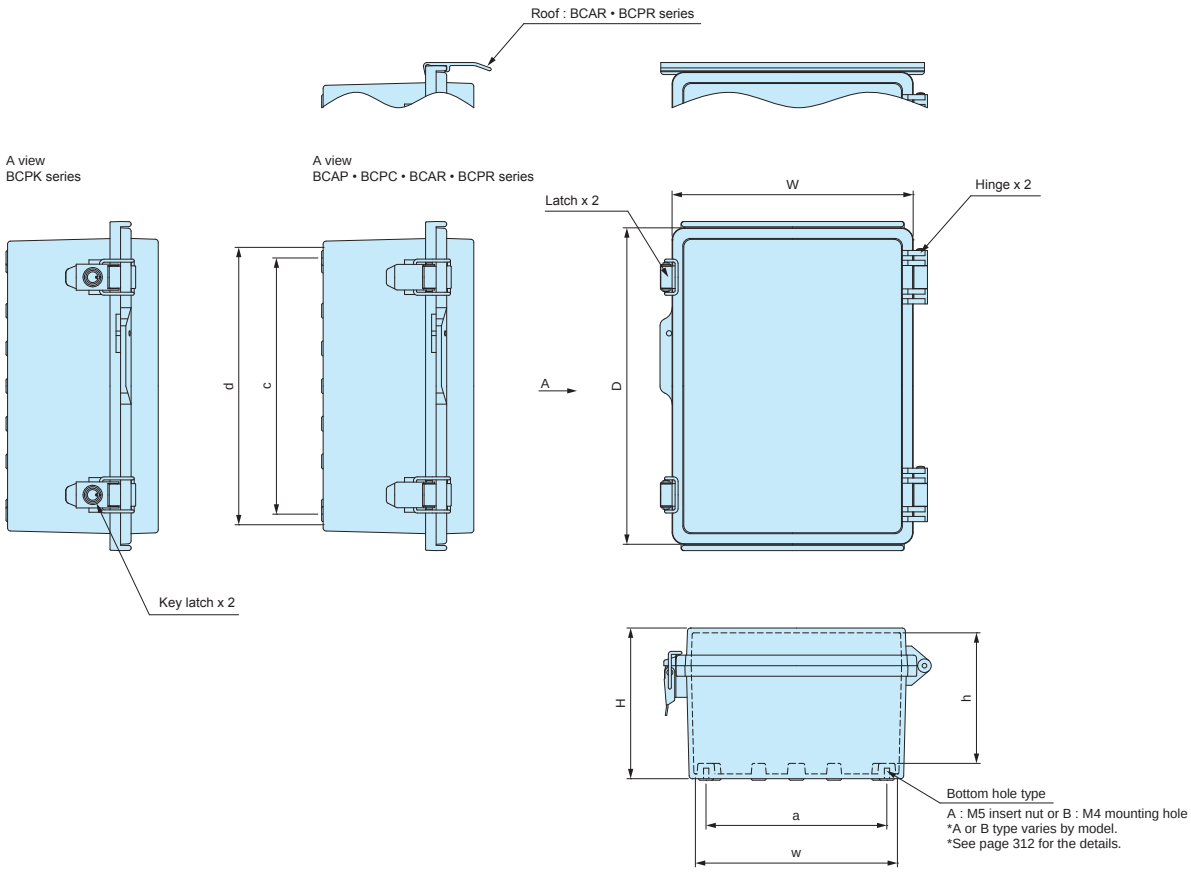

■ Number of bosses inside vary according to box size.
Refer to DXF/DWG/PDF drawings for more details.

APPLICATION EXAMPLE

Surveillance Video Data Cloud Router

Product by LIVELOCK TECHNOLOGIES (Japan)

■ K = BCPK series, R = BCAR • BCPR series.

Product no.	W	D	H	Available range			Bottom hole pitch		Bottom hole type
				w	d	h	a	c	
BCAP • R, BCPC • K • R101507	100	150	70	76	126	56.5	60	110	B
BCAP • R, BCPC • K • R101508	100	150	85	75.5	125.5	71.5	60	110	B
BCAP • R, BCPC • K • R112107	110	210	75	85.8	185.8	61.5	70	170	B
BCAP • R, BCPC • K • R112110	110	210	100	84.9	184.9	86.5	70	170	B
BCAP • R, BCPC • K • R112607	110	260	75	85.8	235.8	61.5	70	220	B
BCAP • R, BCPC • K • R112610	110	260	100.5	85.1	234.9	87.2	70	220	B
BCAP • R, BCPC • K • R131508	135	155	85	110.5	130.5	71.5	95	115	B
BCAP • R, BCPC • K • R131808	135	185	85.5	110.4	160.4	72.2	95	145	B
BCAP • R, BCPC • K • R131810	135	185	100.5	110.4	160.4	87.1	95	145	B
BCAP, BCPC • K 151509	150	150	90	125.7	125.7	75.5	120	120	B
BCAP, BCPC • K 151512	150	150	120.5	124	124	106	117	117	B
BCAP • R, BCPC • K • R162110	160	210	100	134	184	86.6	120	170	B
BCAP • R, BCPC • K • R162113	160	210	130	134	184	116.5	120	170	B
BCAP • R, BCPC • K • R162610	160	260	100	135.1	235.1	86.6	120	220	B
BCAP • R, BCPC • K • R162613	160	260	130	134	234	116.6	120	220	B
BCAP • R, BCPC • K • R172210	170	220	105	144.9	194.9	90.8	132	182	B
BCAP • R, BCPC • K • R172711	170	270	110.5	144.9	244.9	96.1	132	232	B
BCAP • R, BCPC • K • R192810	190	280	100.5	165.3	255.3	84.1	148	238	A
BCAP • R, BCPC • K • R192814	190	280	141	164.2	254.2	124.6	148	238	A
BCPK 203013	200	300	130	173.5	273.6	113.6	152	252	A
BCAP • R, BCPC • R203013□N	200	300	130	173.2	273.2	114	152	252	A
BCAP • R, BCPC • K • R203015□N	200	300	150	173.5	273.5	133.8	152	252	A
BCAP • R, BCPC • K • R203018□N	200	300	180	172.5	272.5	163.8	152	252	A
BCAP • R, BCPC • K • R212110	210	210	100	185.1	185.1	86.6	170	170	B
BCAP • R, BCPC • K • R212113	210	210	130	184	184	116.6	170	170	B
BCPK 253515	250	350	150	222.5	322.5	135.3	206	306	A
BCAP • R, BCPC • R253515□N	250	350	150	222.1	322.3	134	206	306	A
BCPK 253518	250	350	181.5	222.5	322.5	165.8	206	306	A
BCAP • R, BCPC • R253518□N	250	350	180	222.5	322.5	163.8	206	306	A
BCAP • R, BCPC • K • R282813	280	280	130.5	254	254	113.6	238	238	A
BCAP • R, BCPC • K • R283813	280	380	130	254	354	113.6	238	338	A
BCAP • R, BCPC • K • R303015	300	300	151	273	273	134.3	256	256	A
BCAP • R, BCPC • K • R303018	300	300	181	272.5	272.5	164.3	256	256	A
BCAP • R, BCPC • K • R304012	300	400	120	274.5	374.5	103.6	252	352	A
BCAP • R, BCPC • K • R304015	300	400	150	273.5	373.5	133.6	252	352	A
BCAP • R, BCPC • K • R304018	300	400	181	272.5	372.5	164.6	252	352	A
BCAP • R, BCPC • K • R353515	350	350	150	323.6	323.6	133.6	302	302	A
BCAP • R, BCPC • K • R353518	350	350	181	322.5	322.5	164.6	302	302	A
BCAP • R, BCPC • K • R354512	350	450	120	316.7	416.7	103.3	302	402	A
BCAP • R, BCPC • K • R354516	350	450	160	308.7	414.7	142.6	302	402	A
BCAP • R, BCPC • K • R354520	350	450	201	309.3	414.8	183.6	302	402	A
BCAP, BCPC • K 405016	400	500	160	360.4	466.6	144	352	452	A
BCAP, BCPC • K 405020	400	500	201	359.4	465.5	184	352.5	452.5	A

BCAP • BCPC • BCPK • BCAR • BCPR dimensions.

■ DXF/DWG/PDF drawings available on our website.

406018 ~ 507025

※ Not available for BCAR • BCPR 406018 and 406023 models.

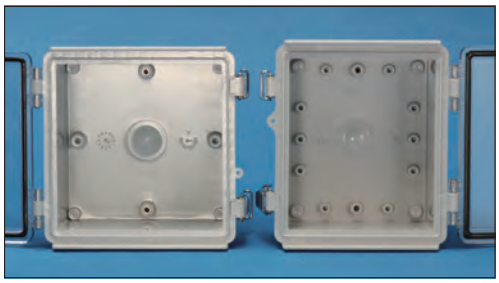

■ Number of bosses inside vary according to box size.
Refer to DXF/DWG/PDF drawings for more details.

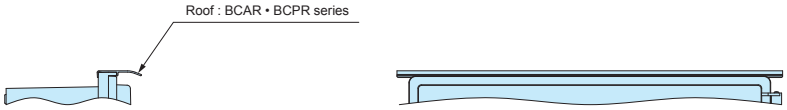

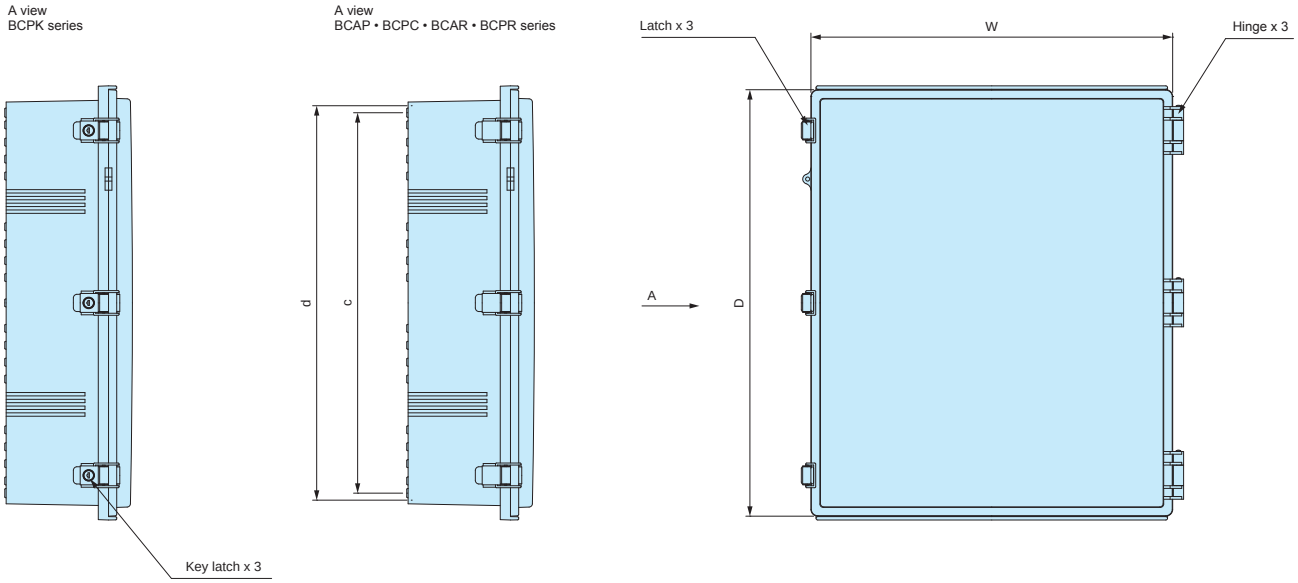

Attention when locking the latch

1. Close latches on both ends first.
2. Close center latch next.

※ Closing center latch first may cause a non-watertight seal.

Center latch must be closed last!

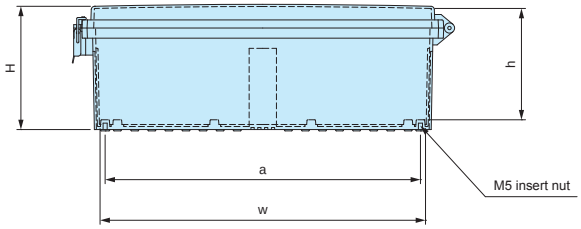

■ K = BCPK series, R = BCAR • BCPR series.

Product no.	W	D	H	Available range			Bottom hole pitch	
				w	d	h	a	c
BCAP, BCPC • K 406018	400	600	181	358.6	565.9	163.8	352.5	552.5
BCAP, BCPC • K 406023	400	600	231	356.9	564.1	213.8	352	552.5
BCAP, R, BCPC • K • R506018	530	630	185	476.8	576.8	163.6	462	562
BCAP, R, BCPC • K • R506025	530	630	255	474.6	574.6	233.6	462	562
BCAP, R, BCPC • K • R507018	530	730	188	477	677	166.1	462	662
BCAP, R, BCPC • K • R507025	530	730	255	475	676.2	236	462	662

608018, 608028

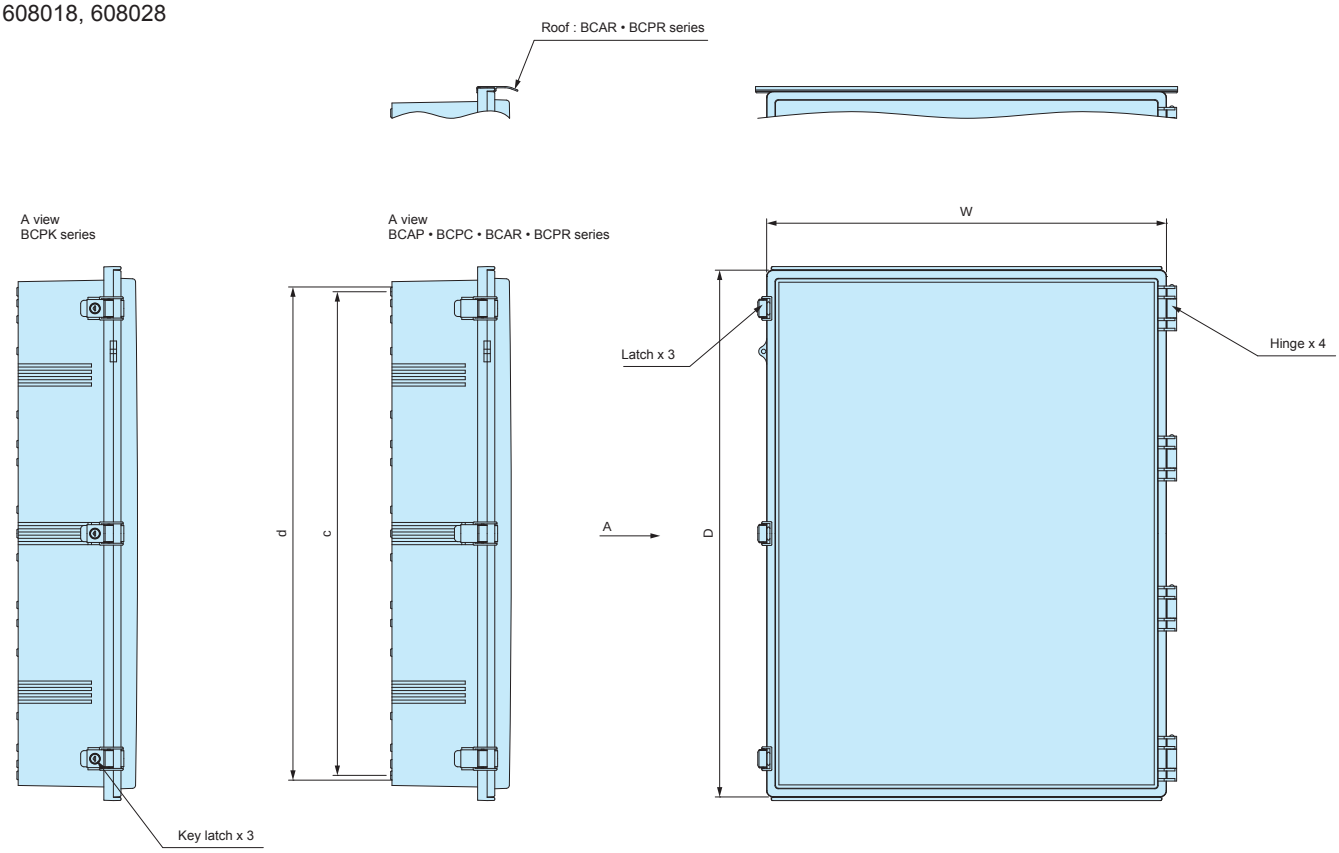

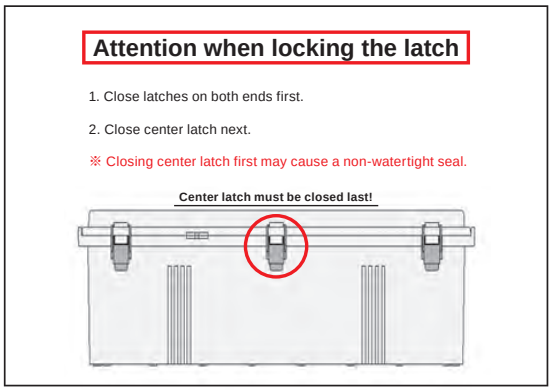

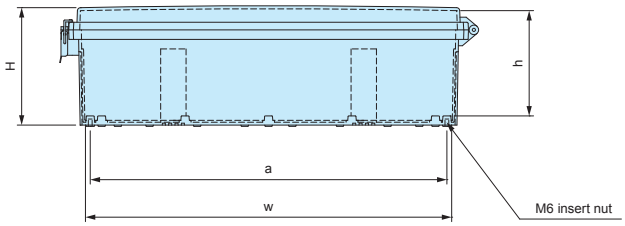

■ K = BCPK series, R = BCAR • BCPR series.

Product no.	W	D	H	Available range			Bottom hole pitch	
				w	d	h	a	c
BCAP • R, BCPC • K • R608018	630	830	188	575	777	165.6	562	762
BCAP • R, BCPC • K • R608028	630	830	288	573.5	773.5	265.8	562	762

Included stainless steel mounting bracket for 506018, 506025, 507018, 507025, 608018, and 608028

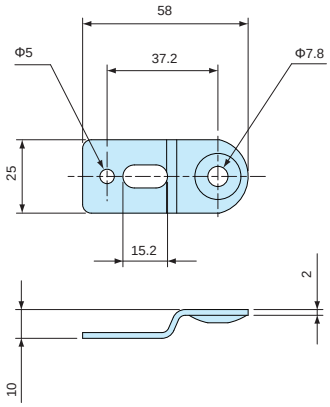

Components

Part name	Pcs	Material	Finish
Mounting bracket	6	Stainless steel	Unfinished
Screw	6	Steel	Trivalent chromate

BRF series OUTDOOR ROOF

NEW SIZE

- Recommended to be used for outdoor environments for protection against rain etc.
- Snap-in easy installation.
- Available for use with BCAP, BCPC, and BCPK series' models except 151509, 151512, 405016, 405020, 406018, and 406023 models.

Color Type

Color code	Material	Color / Finish	Suitable models
G	PVC	White gray	BCAP
S	PVC	Light gray	BCPC • BCPK

BRF dimensions

- DXF/DWG/PDF drawings available on our website.

Roof for 091207 ~ 353518

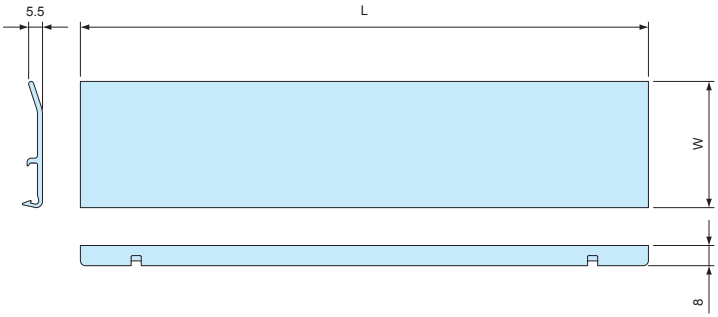

Product no. / Dimensions

- Please suffix the color code at the end of the product number.

Product no.	Suitable models	L	W
BRF- 90□	BCAP • BCPC • BCPK 091207 091208	105	45
BRF-100□	BCAP • BCPC • BCPK 101507 101508	115	45
BRF-110□	BCAP • BCPC • BCPK 112107 112110 112607 112610	125	45
BRF-135□	BCAP • BCPC • BCPK 131508 131808 131810	150	45
BRF-160□	BCAP • BCPC • BCPK 162110 162113 162610 162613	175	45
BRF-170□	BCAP • BCPC • BCPK 172711	185	45
NEW BRF-1722□	BCAP • BCPC • BCPK 172210	180	45
BRF-190□	BCAP • BCPC • BCPK 192810 192814	205	45
BRF-210□	BCAP • BCPC • BCPK 212110 212113	225	45
BRF-200□	BCAP • BCPC • BCPK 203013 203015 203018	225	50
NEW BRF-200□N	BCAP • BCPC • BCPK 203013□N 203015□N 203018□N	225	50
BRF-250□	BCAP • BCPC • BCPK 253515 253518	275	50
NEW BRF-250□N	BCAP • BCPC • BCPK 253515□N 253518□N	275	50
BRF-280□	BCAP • BCPC • BCPK 282813 283813	305	50
BRF-300□	BCAP • BCPC • BCPK 303015 303018 304012 304015 304018	325	50
BRF-350□	BCAP • BCPC • BCPK 353515 353518	375	50

Roof for 354512 ~ 354520

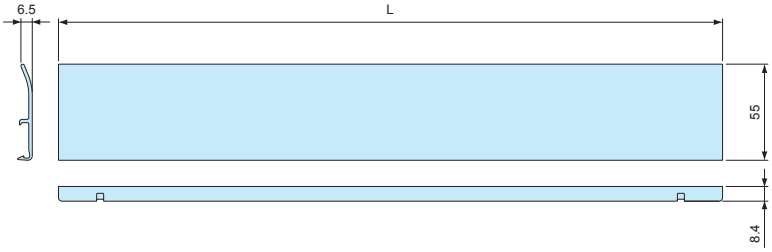

Product no. / Dimensions

- Please suffix the color code at the end of the product number.

Product no.	Suitable models	L
BRF-350L□	BCAP • BCPC • BCPK 354512 354516 354520	380

- S color type is light gray painted.

Roof for 506018 ~ 608028

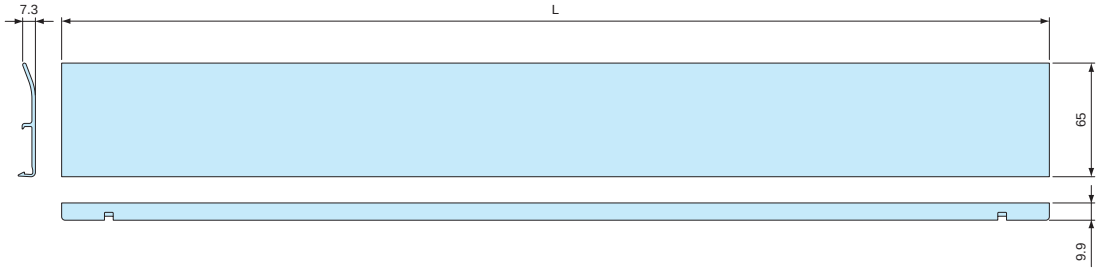

Product no. / Dimensions

■ Please suffix the color code at the end of the product number.

Product no.	Suitable models	L
BRF-530□	BCAP • BCPC • BCPK 506018 506025 507018 507025	565
BRF-630□	BCAP • BCPC • BCPK 608018 608028	665

■ S color type is light gray painted.

■ How to install BRF outdoor roof

Refer to illustration.

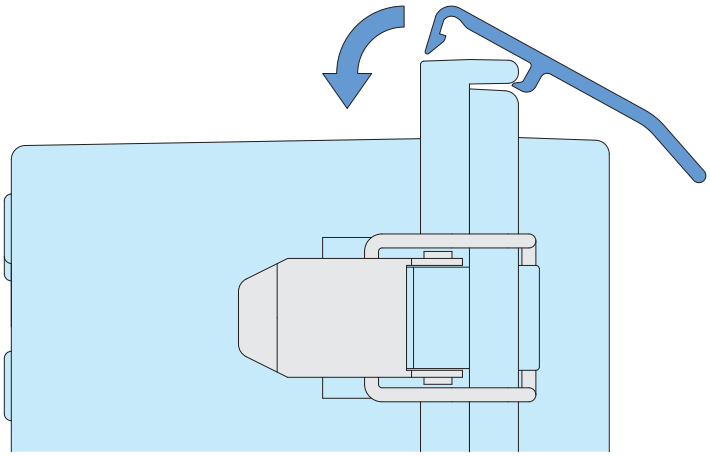

BCC-1 DUST PROTECTION CAP

■ Prevent dust and other foreign material entry.

■ Protection against corrosion on key hole part in environments such as coastal areas.

■ When ordering, please ensure that the quantity required corresponds to the number of latches on your selected model.

Product no. / Dimensions

Product no.	Material	Color	Pack of
BCC-1	Silicone	Black	1

Suitable models

Suitable models	Required
BCPK192810 ~ 203018, 253515 ~ 405020	2
BCPK406018 ~ 608028	3

■ Not suitable for BCPK 212110, 212113, 172711 and smaller models.

BMP-Z series STEEL MOUNTING PLATE

- Customization services (machining, punch press or clinching nut insertion) are available. See website for more details.
- Tough but easily customizable.
- Large sized (BMP5060Z, 5070Z, and 6080Z) plates have a 90° bent edge.

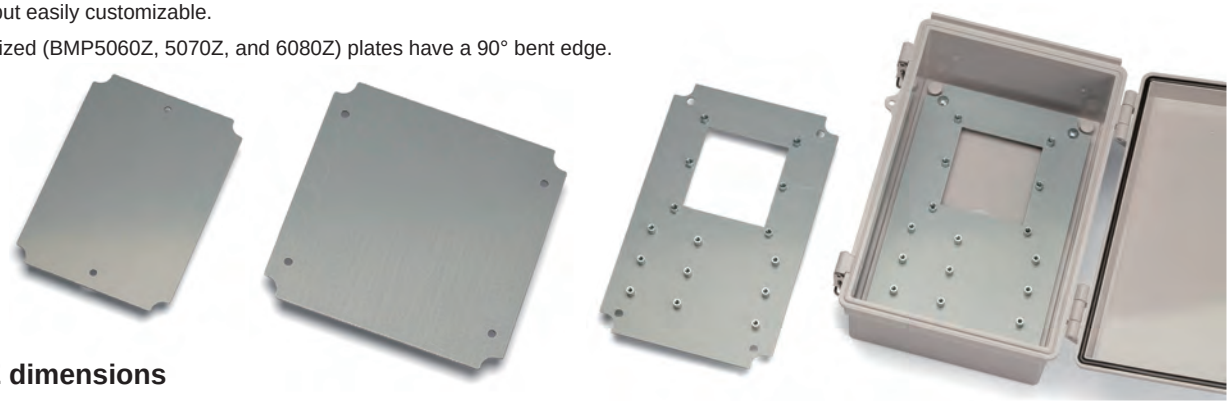

BMP-Z dimensions

BMP0912Z ~ 1727Z

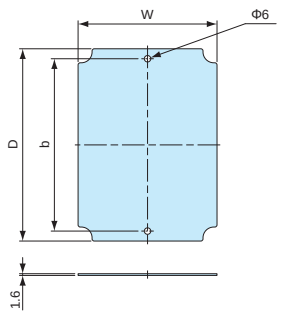

BMP1928Z ~ 4060Z

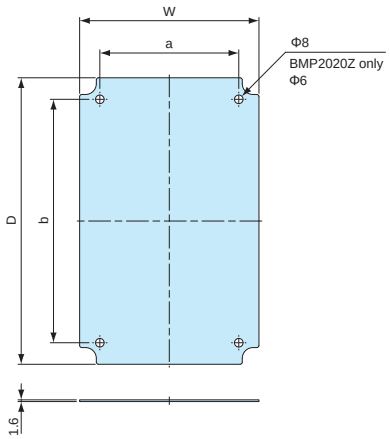

BMP5060Z ~ 6080Z

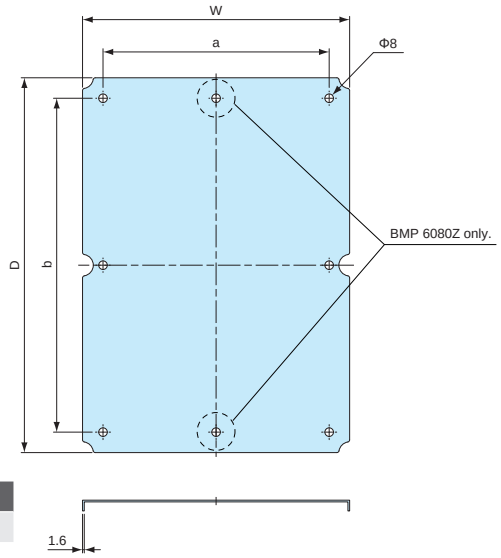

Components

Part name	Material	Finish
Mounting plate	Steel SECC t = 1.6	Zinc coated

- DXF/DWG/PDF drawings available on our website.

Product no. / Dimensions

Product no.	W	D	a	b	Suitable models	Weight (g)
BMP0912Z	58	88	–	69	BCAP • R, BCPC • K • R 091207, 091208	53
BMP0813Z	68	118	–	100	BCAP • R, BCPC • K • R 101507, 101508	87
BMP1121Z	77	177	–	158	BCAP • R, BCPC • K • R 112107, 112110	159
BMP1126Z	77	227	–	208	BCAP • R, BCPC • K • R 112607, 112610	210
BMP1315Z	102	122	–	110	BCAP • R, BCPC • K • R 131508	141
BMP1217Z	102	152	–	140	BCAP • R, BCPC • K • R 131808, 131810	180
BMP1515Z	121	121	–	110	BCAP BCPC • K 151509, 151512	172
BMP1520Z	126	176	–	160	BCAP • R, BCPC • K • R 162110, 162113	262
BMP1525Z	127	227	–	210	BCAP • R, BCPC • K • R 162610, 162613	346
BMP1722Z	137	187	–	160	BCAP • R, BCPC • K • R 172210	308
BMP1727Z	137	237	–	210	BCAP • R, BCPC • K • R 172711	391
BMP1928Z	157	247	120	210	BCAP • R, BCPC • K • R 192810, 192814	462.5
BMP2020Z	176	176	120	150	BCAP • R, BCPC • K • R 212110, 212113	371
BMP2030Z	165	265	129	226	BCAP • R, BCPC • K • R 203013, 203015, 203018	519
BMP2535Z	215	315	180	270	BCAP • R, BCPC • K • R 253515, 253518	816
BMP2828Z	246	246	210	210	BCAP • R, BCPC • K • R 282813	727.5
BMP2838Z	246	346	210	310	BCAP • R, BCPC • K • R 283813	1,018
BMP3030Z	264	264	219	219	BCAP • R, BCPC • K • R 303015, 303018	826.5
BMP3040Z	265	365	228	325	BCAP • R, BCPC • K • R 304012, 304015, 304018	1,154
BMP3535Z	315	315	270	270	BCAP • R, BCPC • K • R 353515, 353518	1,196.5
BMP3545Z	301	401	274	365	BCAP • R, BCPC • K • R 354512, 354516, 354520	1,443
BMP4050Z	354	454	328	428	BCAP BCPC • K 405016, 405020	1,998
BMP4060Z	354	551	328	525	BCAP BCPC • K 406018, 406023	2,328
BMP5060Z	474	574	426	526	BCAP • R, BCPC • K • R 506018, 506025	3,286
BMP5070Z	472	672	426	626	BCAP • R, BCPC • K • R 507018, 507025	3,864
BMP6080Z	565	765	526	726	BCAP • R, BCPC • K • R 608018, 608028	5,288.5

- K = BCPK series, R = BCAR • BCPR series.

BMP-P series PLASTIC MOUNTING PLATE

■ Light weight ABS plastic mounting plate.

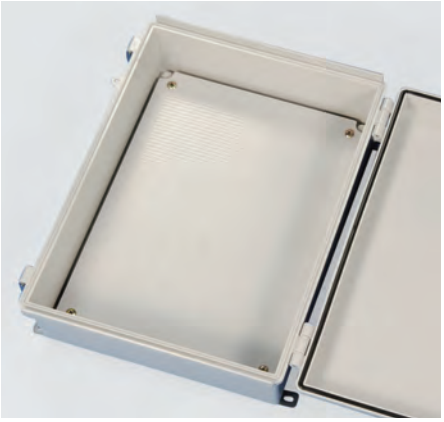

BMP-P dimensions

BMP0811P

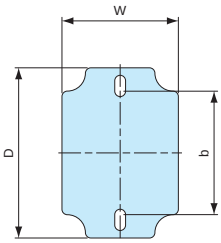

BMP0813P ~ 1515P

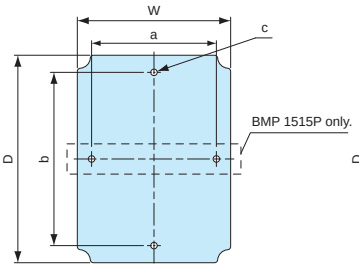

BMP1520P, 1525P

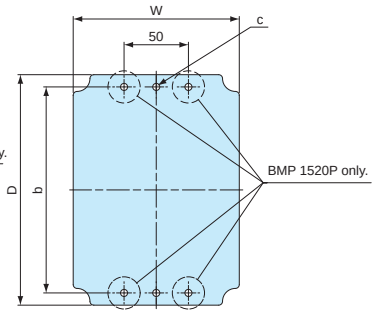

BMP1928P ~ 4050P

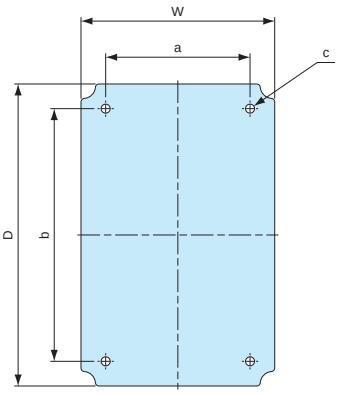

■ DXF/DWG/PDF drawings available on our website.

Components

Part name	Material	Color
Mounting plate	ABS	White gray

Product no. / Dimensions

Product no.	W	D	a	b	c (Φ)	Thickness	Suitable models	Weight (g)
BMP0811P	64.5	94.3	–	68.4	–	3.5	BCAP • R, BCPC • K • R 091207, 091208	21
BMP0813P	64.6	114.5	–	88.4	–	3.5	BCAP • R, BCPC • K • R 101507, 101508	24
BMP1121P	76.5	176	–	158	6	3	BCAP • R, BCPC • K • R 112107, 112110	40
BMP1126P	76.5	226	–	208	6	3	BCAP • R, BCPC • K • R 112607, 112610	53
BMP1315P	101.5	121.5	–	110	5.5	3.5	BCAP • R, BCPC • K • R 131508	36
BMP1217P	110	160	–	140	6	3.5	BCAP • R, BCPC • K • R 131808, 131810	62
BMP1515P	123	123	110	110	6	3.5	BCAP BCPC • K 151509, 151512	52
BMP1520P	129	179	–	160	5.5	3.5	BCAP • R, BCPC • K • R 162110, 162113, 172210	92
BMP1525P	129	228.5	–	210	6	3.5	BCAP • R, BCPC • K • R 162610, 162613, 172711	112
BMP1928P	158.5	248	120	210	8	3.5	BCAP • R, BCPC • K • R 192810, 192814	162
BMP2020P	178.5	178.5	120	150	5.5	3.5	BCAP • R, BCPC • K • R 212110, 212113	125
BMP2030P	166.5	266	128	225.5	8	4	BCAP • R, BCPC • K • R 203013, 203015, 203018	188
BMP2535P	215.5	315	180	268.5	8	4	BCAP • R, BCPC • K • R 253515, 253518	292
BMP2828P	248.5	248.5	210	210	8	4	BCAP • R, BCPC • K • R 282813	237
BMP2838P	248	347.5	209	309.5	8	4	BCAP • R, BCPC • K • R 283813	368
BMP3030P	262.5	262.5	219	219	7.5	4	BCAP • R, BCPC • K • R 303015, 303018	281
BMP3040P	264	364	228	324	7	3.7	BCAP • R, BCPC • K • R 304012, 304015, 304018	437
BMP3535P	313.5	313.5	269.5	269.5	8	4	BCAP • R, BCPC • K • R 353515, 353518	424.5
BMP3545P	305	405.5	273	364	8	4	BCAP • R, BCPC • K • R 354512, 354516, 354520	539
BMP4050P	357	457	328	428	8.5	4	BCAP BCPC • K 405016, 405020	725.5

■ K = BCPK series, R = BCAR • BCPR series.

BMP-W series WOODEN MOUNTING PLATE

- Easy installation with self-tapping screws.
- Easily customizable hard wooden plate.
- Plate comes with scales printed on for easy references.

BMP-W dimensions

BMP0912W ~ 1727W

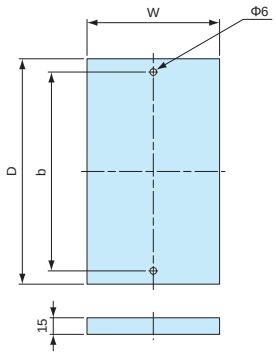

BMP1928W ~ 4060W

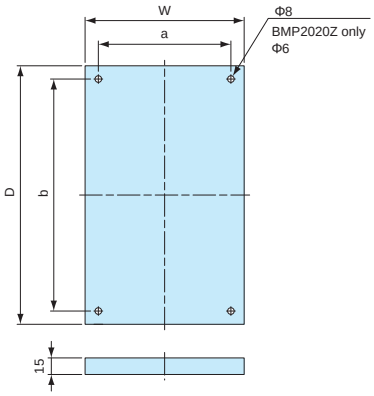

BMP5060W ~ 6080W

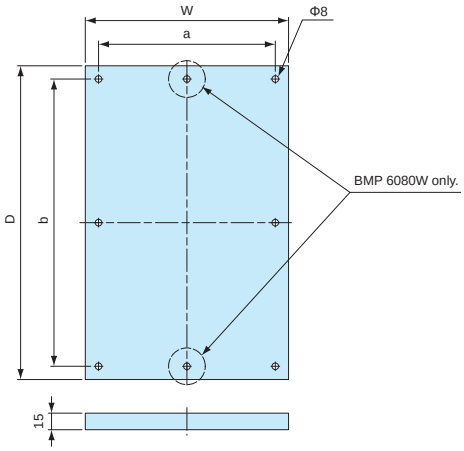

- DXF/DWG/PDF drawings available on our website.

Components

Part name	Pcs	Material	Color / Finish
Mounting plate	1	Wood board t=15	Scaled sheet
Self-tapping screw pan washer head	2 ~ 8	Steel	Trivalent chromate

Product no. / Dimensions

Product no.	W	D	a	b	Suitable models	Screw	Weight (g)
BMP0912W	58	92	–	69	BCAP • R, BCPC • K • R 091207, 091208	M4×20 2 pcs	62
BMP0813W	68	122	–	99	BCAP • R, BCPC • K • R 101507, 101508	M4×20 2 pcs	94
BMP1121W	77	181	–	158	BCAP • R, BCPC • K • R 112107, 112110	M4×20 2 pcs	166
BMP1126W	77	231	–	208	BCAP • R, BCPC • K • R 112607, 112610	M4×20 2 pcs	191
BMP1315W	102	126	–	110	BCAP • R, BCPC • K • R 131508	M4×20 2 pcs	127
BMP1217W	102	156	–	140	BCAP • R, BCPC • K • R 131808, 131810	M4×20 2 pcs	190
BMP1515W	118	125	–	110	BCAP BCPC • K 151509, 151512	M4×20 2 pcs	172
BMP1520W	126	180	–	160	BCAP • R, BCPC • K • R 162110, 162113	M4×20 2 pcs	243
BMP1525W	127	231	–	210	BCAP • R, BCPC • K • R 162610, 162613	M4×20 2 pcs	352
BMP1722W	137	191	–	160	BCAP • R, BCPC • K • R 172210	M4×20 2 pcs	286
BMP1727W	137	241	–	210	BCAP • R, BCPC • K • R 172711	M4×20 2 pcs	212
BMP1928W	150	240	120	210	BCAP • R, BCPC • K • R 192810, 192814	M5×20 4 pcs	350
BMP2020W	170	174	120	150	BCAP • R, BCPC • K • R 212110, 212113	M4×20 4 pcs	336
BMP2030W	159	256	129	226	BCAP • R, BCPC • K • R 203013, 203015, 203018	M5×20 4 pcs	482
BMP2535W	210	300	180	270	BCAP • R, BCPC • K • R 253515, 253518	M5×20 4 pcs	688
BMP2828W	240	240	210	210	BCAP • R, BCPC • K • R 282813	M5×20 4 pcs	565
BMP2838W	240	340	210	310	BCAP • R, BCPC • K • R 283813	M5×20 4 pcs	893
BMP3030W	249	249	219	219	BCAP • R, BCPC • K • R 303015, 303018	M5×20 4 pcs	659
BMP3040W	258	355	228	324	BCAP • R, BCPC • K • R 304012, 304015, 304018	M5×20 4 pcs	965
BMP3535W	300	300	270	270	BCAP • R, BCPC • K • R 353515, 353518	M5×20 4 pcs	964
BMP3545W	301	395	274	365	BCAP • R, BCPC • K • R 354512, 354516, 354520	M5×20 4 pcs	1,314
BMP4050W	355	455	328	428	BCAP BCPC • K 405016, 405020	M5×20 4 pcs	1,754
BMP4060W	355	552	328	525	BCAP BCPC • K 406018, 406023	M5×20 4 pcs	2,015.5
BMP5060W	455	556	426	526	BCAP • R, BCPC • K • R 506018, 506025	M5×20 6 pcs	2,650
BMP5070W	455	656	426	626	BCAP • R, BCPC • K • R 507018, 507025	M5×20 6 pcs	3,152.5
BMP6080W	556	756	526	726	BCAP • R, BCPC • K • R 608018, 608028	M6×20 8 pcs	4,434

- K = BCPK series, R = BCAR • BCPR series.

BFL series PLASTIC MOUNTING PLATE

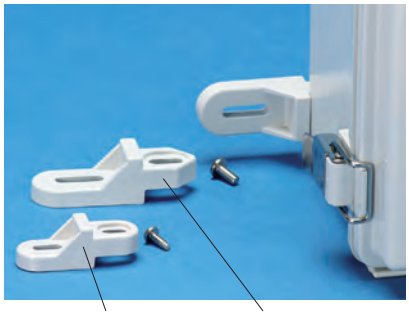

Color G Color S

- 2 different colored types to match box colors
- Tough and strong glass fiber filled polycarbonate.

BFL dimensions

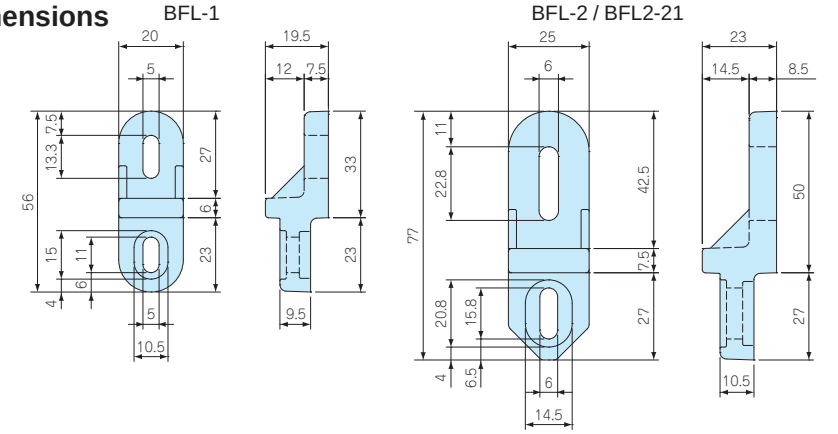

Color Type

Code	Color	Suitable models
G	White gray	BCAP • BCAR
S	Light gray	BCPC • BCPK • BCPR

Components

- DXF/DWG/PDF drawings available on our website.

Part name	Pcs	Material / Finish
Mounting bracket	4	Glass fiber filled polycarbonate
Screw	4	Stainless steel / Unfinished

Product no. / Dimensions

Product no.	Suitable models	Screw
BFL-1□	BCAP • R, BCPC • K • R 0912, 1015, 1121, 1126, 1315, 1318, 1621, 1626, 1722, 1727, 212113	Self-tapping M4-12 bind head
BFL-2□	BCAP • R, BCPC • K • R 1928, 2030, 2535, 2828, 2838, 3030, 3040, 3535, 3545, 4050, 4060, 5060	M5-12 bind head
BFL-2-21□	BCAP • R, BCPC • K • R 212110	Self-tapping M4-12 bind head

- Please suffix color code at the end of the product number.

*Not suitable for BCAP1515 models. Use CK-35P (Stainless steel) instead.

CK series STAINLESS STEEL MOUNTING BRACKET

CK dimensions

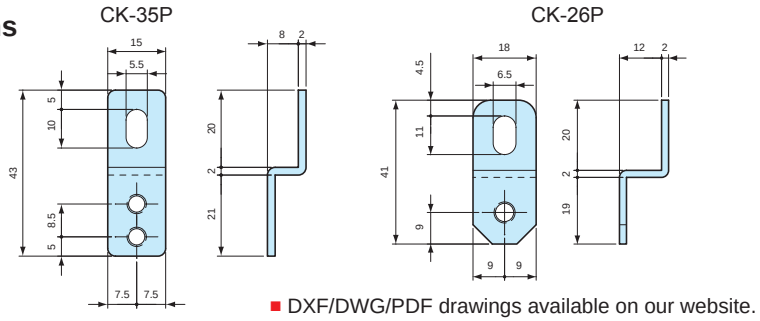

- DXF/DWG/PDF drawings available on our website.

Components

Part name	Pcs	Material	Finish
Mounting bracket	4	Stainless steel SUS304	Barrel finish
Screw	4	Stainless steel	Unfinished

Product no. / Dimensions

Product no.	Suitable models	Screw
CK-35P	BCAP • R, BCPC • K • R 0912, 1015, 1121, 1126, 1315, 1318, 1515, 1621, 1626, 1722, 1727, 2121	Self-tapping M4-10 pan head
CK-26P	BCAP • R, BCPC • K • R 1928, 2030, 2535, 2828, 2838, 3030, 3040, 3535, 3545, 4050, 4060	M5-10 pan head

MT series PCB MOUNTING SCREW

- PCB mounting screws for inner bosses of BCAP • BCAR • BCPC • BCPK • BCPR series.

Product no. / Dimensions

Product no.	Screw details	Material	Finish	Pack of
MT4-8T	Self-tapping M4-8 bind head	Steel	Trivalent chromate	20
MT5-8T	Self-tapping M5-8 bind head	Steel	Trivalent chromate	20

Product no. / Dimensions

Product no.	Suitable models	Recommended torque
MT4-8T	BCAP • R, BCPC • K • R 0912, 1015, 1121, 1126, 1315, 1318, 1515, 1621, 1626, 1722, 1727, 1928, 2121	0.7N • m
MT5-8T	BCAP • R, BCPC • K • R 2030, 2535, 2828, 2838, 3030, 3040, 3535, 3545, 4050, 4060, 5060, 5070, 6080	1.4N • m

SSK series POLE MOUNTING BRACKET for BCAP • BCAR • BCPC • BCPK • BCPR

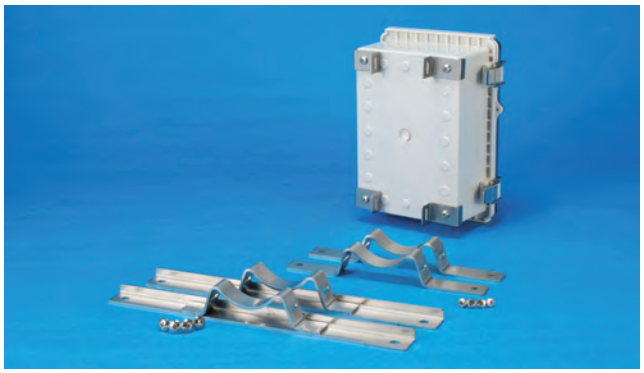

- Stainless steel pole mounting bracket for BCAP • BCAR • BCPC • BCPK • BCPR series.
- No hole milling is required for maintaining the IP rating of the boxes.
- SSK-P models come with plastic brackets.

SSK dimensions

- DXF/DWG/PDF drawings available on our website.

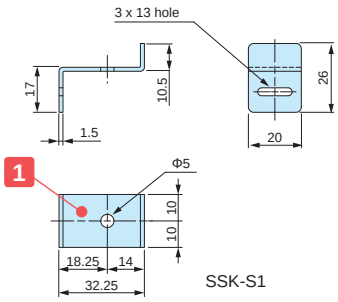

SSK-S1

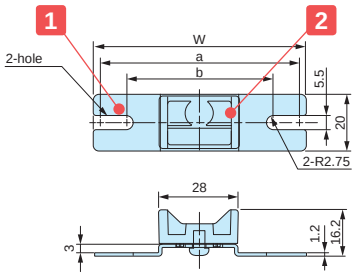

SSK-P60 • 75 • 80

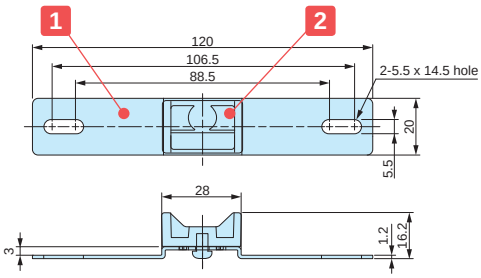

SSK-P120

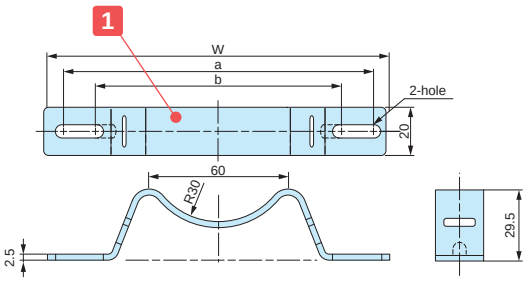

SSK-160 ~ 250

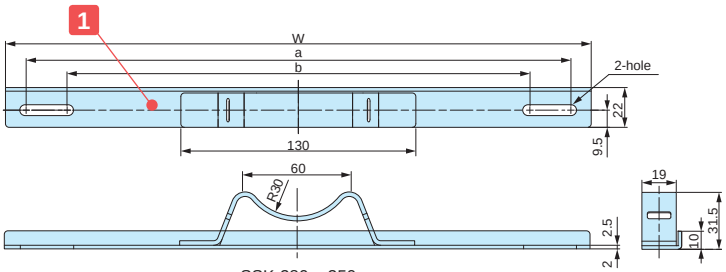

SSK-280 ~ 350

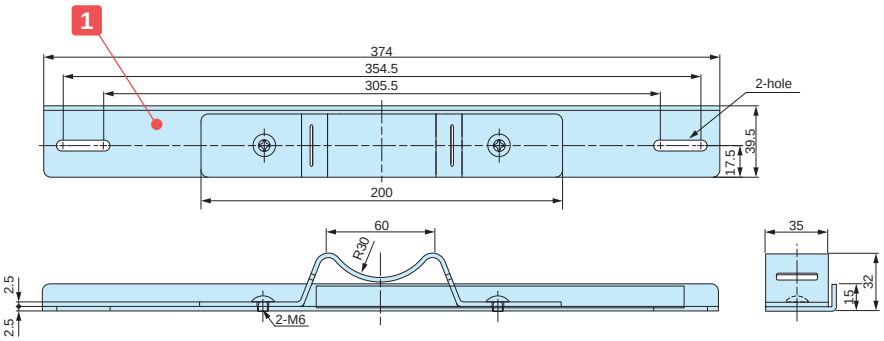

SSK-400

APPLICATION EXAMPLE

Weather Station Data Logger

Product by Sakaki (Japan)

Water Level Detector

Product by Aspect System (Japan)

Accessories (Optional parts)

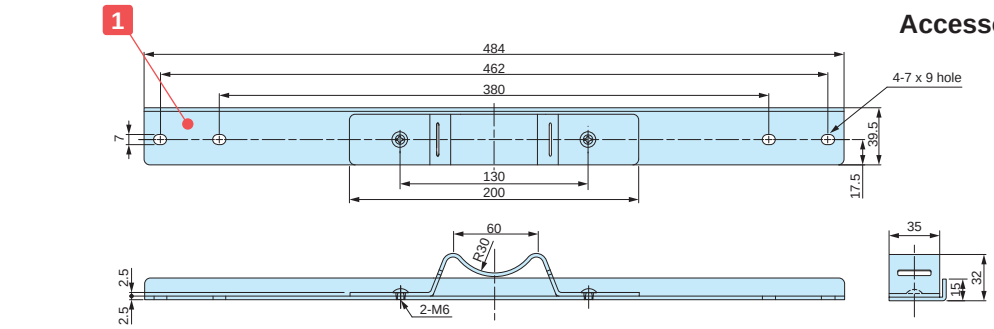

SSK-530

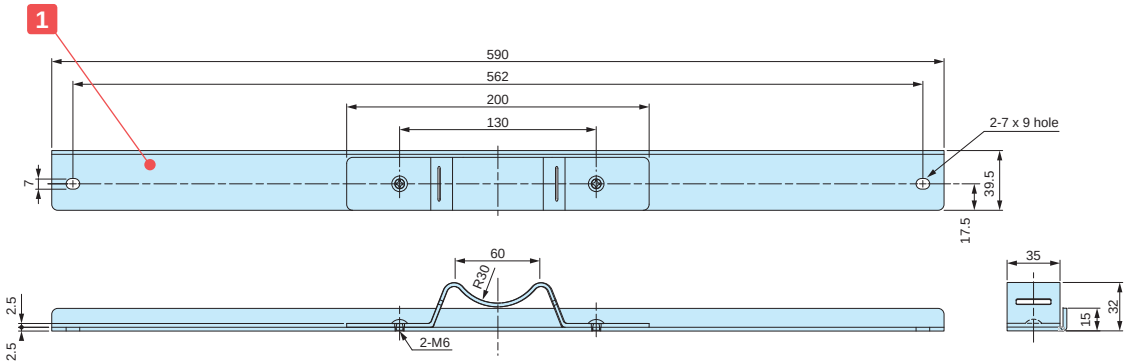

SSK-630

■ DXF/DWG/PDF drawings available on our website.

Components

No.	Part name	Pcs	Material	Color / Finish
1	Mounting bracket	2 / 4	Stainless steel SUS304	Barrel finish
2	Plastic bracket (SSK-P only)	2	ASA UL94HB	White gray
–	Screw	4	Stainless steel	Unfinished

Product no. / Dimensions

Product no.	W	a	b	Suitable models BCAP • BCAR • BCPC • BCPK • BCPR	Belt to use with	Pack of
SSK-S1	32.25	18.25	14	0912, 1015, 1121, 1126, 1315, 1318, 1621, 1626, 1722, 1727, 2121	PKB10PM, 10P, PKB10S, SNB series	4
SSK-P60	60	54.5	47.5	0912	PKB10PM, 10P, PKB10S	2
SSK-P75	75	69.5	55.5	1015	PKB10PM, 10P, PKB10S	2
SSK-P80	80	74.5	64.5	1121, 1126	PKB10PM, 10P, PKB10S	2
SSK-P120	120	106.5	88.5	1315, 1318	PKB10PM, 10P, PKB10S	2
SSK-160	142	129.5	106.5	1515, 1621, 1626	PKB10PM, 10P, PKB10S, SNB series	2
SSK-170	152	142.3	101	1722, 1727	PKB10PM, 10P, PKB10S, SNB series	2
SSK-200	174	161.5	112.5	1928, 2030	PKB10PM, 10P, PKB10S, SNB series	2
SSK-210	192	180.5	131.5	2121	PKB10PM, 10P, PKB10S, SNB series	2
SSK-250	230	215.5	166.5	2535	PKB10PM, 10P, PKB10S, SNB series	2
SSK-280	260	244.5	195.5	2828, 2838	PKB10PM, 10P, PKB10S, SNB series	2
SSK-300	280	264.5	215.5	3030, 3040	PKB10PM, 10P, PKB10S, SNB series	2
SSK-350	324	302.5	253.5	3535, 3545	PKB10PM, 10P, PKB10S, SNB series	2
SSK-400	374	354.5	305.5	4050, 4060	PKB20S, SNB series	2
SSK-530	484	462	380	5060, 5070	PKB20S, SNB series	2
SSK-630	590	562	–	6080	PKB20S, SNB series	2

SNB series

PKB−10PM, 10P

PKB−10S, 20S

■ Pole mounting strap and belt, SNB and PKB series are sold separately. See page 323 ~ 324 for further details.

SNB series STAINLESS STEEL POLE MOUNTING STRAP NEW

SNB dimensions

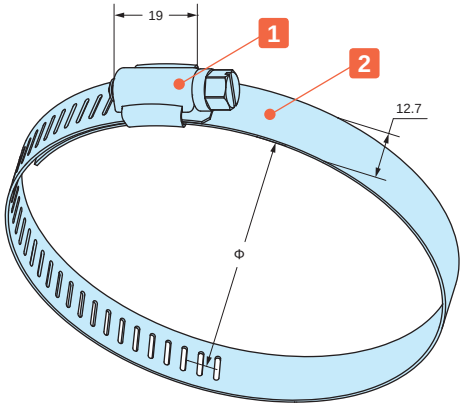

- Corrosion resistant stainless steel (SUS304) belt clamp.
- It can be installed securely by tightening the screw.
- 8 mm nut driver (box driver) is recommended for tightening. Minus screw driver can also be used.

Components

No.	Part name	Pcs	Material	Finish
1	Bracket	1	Stainless steel SUS304	Polished
2	Strap	1	Stainless steel SUS304	Polished

Product no. / Dimensions

Product no.	Applicable diameter (Φ)	Strap width	Strap thickness	Recommended torque N • m	Weight (g)	Pack of
SNB 52- 76	52 ~ 76	12.7	0.6	0.7 ~ 1.0	27.5	1
SNB 72- 95	72 ~ 95	12.7	0.6	0.7 ~ 1.0	30	1
SNB 91-114	91 ~ 114	12.7	0.6	0.7 ~ 1.0	34.5	1
SNB105-127	105 ~ 127	12.7	0.6	0.7 ~ 1.0	37.5	1
SNB117-140	117 ~ 140	12.7	0.6	0.7 ~ 1.0	39.5	1
SNB130-153	130 ~ 153	12.7	0.6	0.7 ~ 1.0	41.5	1
SNB142-165	142 ~ 165	12.7	0.6	0.7 ~ 1.0	43.5	1
SNB155-178	155 ~ 178	12.7	0.6	0.7 ~ 1.0	46.5	1
SNB168-191	168 ~ 191	12.7	0.6	0.7 ~ 1.0	49	1
SNB181-204	181 ~ 204	12.7	0.6	0.7 ~ 1.0	51	1
SNB194-217	194 ~ 217	12.7	0.6	0.7 ~ 1.0	52.5	1
SNB207-230	207 ~ 230	12.7	0.6	0.7 ~ 1.0	57	1
SNB220-243	220 ~ 243	12.7	0.6	0.7 ~ 1.0	59.5	1
SNB233-256	233 ~ 256	12.7	0.6	0.7 ~ 1.0	62.5	1
SNB246-269	246 ~ 269	12.7	0.6	0.7 ~ 1.0	64	1
SNB259-282	259 ~ 282	12.7	0.6	0.7 ~ 1.0	67.5	1
SNB272-295	272 ~ 295	12.7	0.6	0.7 ~ 1.0	70	1
SNB285-308	285 ~ 308	12.7	0.6	0.7 ~ 1.0	71	1

- Recommended torque listed is for reference only; actual may differ. Assemble after testing torque.

SNB Strap required

Suitable series	Suitable models						Required
SSK series	SSK-S1	SSK-160	SSK-170	SSK-200	SSK-210	SSK-250	2
	SSK-280	SSK-300	SSK-350	SSK-400	SSK-530		
WGMB series	WGMB-1W						1

PKB series POLE MOUNTING BELT

PKB−10PM, 10P

PKB−10S, 20S

- Pole mounting belt for attachment of enclosures with suitable pole mount brackets or construction onto poles.
- Designed for one time use only (not reusable).
- Strong stainless steel clamping type and easy installation plastic type are available.

PKB dimensions

- DXF/DWG/PDF drawings available on our website.

PKB-10PM, 10P

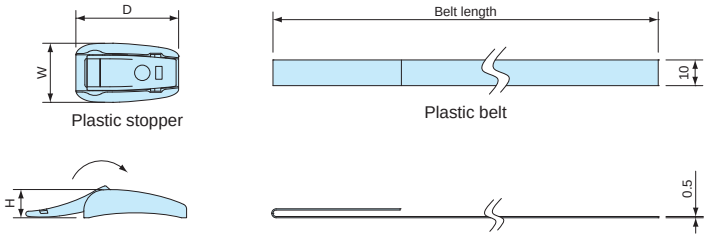

PKB-10S

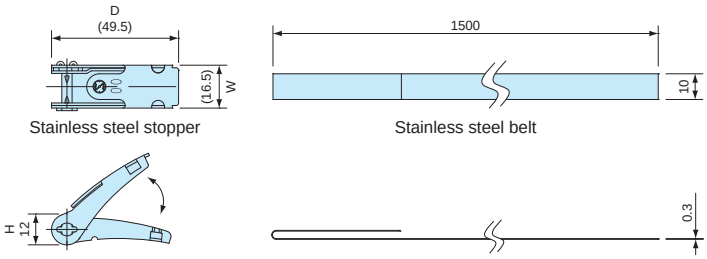

PKB-20S

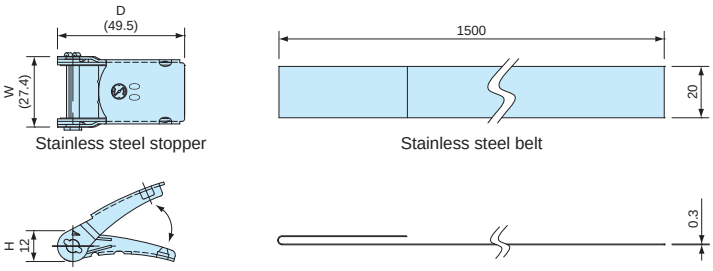

Components

No.	Part name	Material	Color / Finish
1	Stopper	Stainless steel SUS304 • POM	Barrel finish • Black
2	Belt	Stainless steel SUS430 • PET	Bright annealed finish • Gray

Product no. / Dimensions

Product no.	W	D	H	Belt length	Belt material	Tensile strength (horizontal)	Weight (g)	Pack of
PKB-10PM	24	23	11	500 mm	PET	0.8kN	14	2
PKB-10PM	23	40	11	1,500 mm	PET	1.3kN	31.8	2
PKB-10S	16.5	49.5	12	1,500 mm	Stainless steel SUS304	1.4kN	101.6	2
PKB-20S	27.4	49.5	12	1,500 mm	Stainless steel SUS430	2.9kN	182.2	2

PMF series PROTECTIVE VENT

Pressure Equalization / Ventilation

Application Example

- Protective vent protects the enclosure from deformation by equalizing internal and external pressure differences, as well as venting the gas generated within the enclosure.
- IP68 protection class (water depth 2 meters / 60 mins) with an operating temperature range -40°C ~ +125°C allows them to be used in harsh environments.
- PMF-6B model is suitable for enclosures with capacities of up to 2.0 liters. PMF-12 and PMF-12HS models are suitable for up to 5 and 50 liters respectively.
- Recommended to be installed at the sides of the enclosure.
- Use in industrial and electrical / electronic products only; not suitable to be used in medical, food and beverage, and cosmetic industries and related industrial equipment.

PMF dimensions

- DXF/DWG/PDF drawings available on our website.

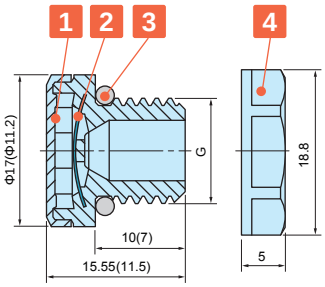

( ) values are for PMF-6B.
Lock nut is not available for PMF-6B

Hole milling drawings

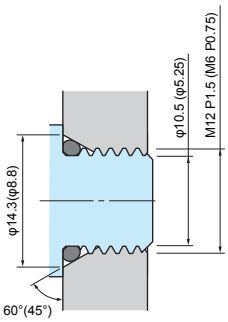

- Recommended for prevention of O-ring deformation during tightening.
  If tightened with a lock nut, a standard through-hole is sufficient for installation.

Installation drawings

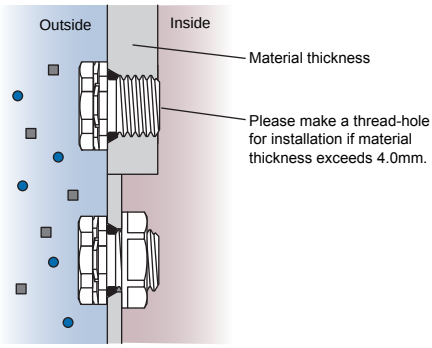

- If used with a lock nut, material thickness should not exceed 4.0mm.

Technical Data

Product no.	PMF-6B	PMF-12	PNF-12HA
Airflow	300ml / min (dp = 7kPa)	450ml / min (dp = 7kPa)	4,000ml / min (dp = 7kPa)
Recommended torque	0.2 ~ 0.4N • m	0.6 ~ 0.8N • m	0.6 ~ 0.8N • m
Certifications	IEC60529 (Protection class test) : IP65 • IP66 • IP67 • IP68 • IP69K (Not for PMF-6B) IEC60068-2-1, 2, 14 (Heat resistance test) : - 40°C ~ +125°C (~+150°C for PMF-6B) IEC60068-2-78 (Humidity test) : 85°C • 85% humidity • 1,000 hours IEC60068-2-11, 52 (Salt spray test) IEC60068-2-64 (Vibration test) GR-3108-CORE (Corrosive gas test) UL94V-0 (Flame-resistant) • UL746C f1		

Product no. / Dimensions

Product no.		Material				G		Lock nut SW
● Light gray	● Black	1 Housing	2 Filter	3 O-ring	4 Lock nut	Thread size	Mount hole	
—	PMF- 6B	PA6 / 66	PTFE	Silicone	—	M6 x P0.75	—	—
PMF-12S	PMF-12B	PA66 / 6	PTFE	Silicone	PA66 (UL94V-2)	M12 x P1.5	Φ12.2	17
PMF-12HAS	PMF-12HAB	PA66 / 6	PTFE	Silicone	PA66 (UL94V-2)	M12 x P1.5	Φ12.2	17

PMF-32S LARGE PROTECTIVE VENT

Pressure Equalization / Ventilation

IP68 IP69K

- Maintaining high airflow for large enclosures in an outdoor environment.
- Protective vent protects the enclosure from deformation by equalizing internal and external pressure differences, as well as venting the gas generated within the enclosure.
- Simple and flat design allows it to be used on a wide variety of enclosure types.
- IP68 protection class rated with an operating temperature range of -40°C ~ +125°C allows it to be used in harsh environments.
- Compliant with Solar industry testing IEC62108 standards.
- Recommended to be installed at the sides of the enclosure.
- Use in industrial and electrical / electronic products only; not suitable to be used in medical, food and beverage, and cosmetic industries and related industrial equipment.

PMF-32 dimensions

- DXF/DWG/PDF drawings available on our website.

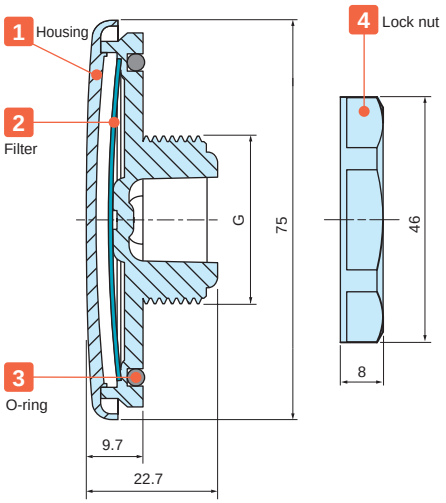

Hole milling drawings

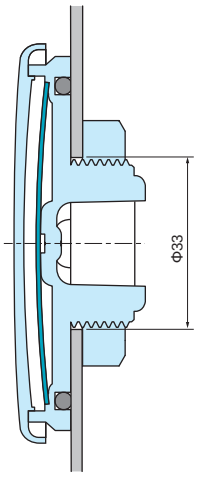

Installation drawings

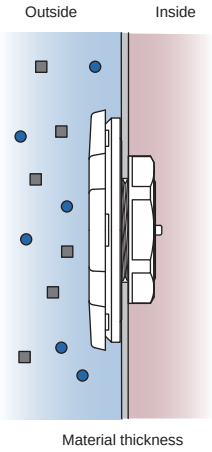

- If used with a lock nut, material thickness should not exceed 5.0mm.

Technical Data

Airflow	16ℓ / min (dp = 1.2kPa)
Recommended torque	5 N • m
Certifications	IEC529, 2nd (Protection class test) : IP66 • IP67 • IP68 • IP69K IEC60068-2-1, 2, 14 (Heat resistance test) : - 40°C ~ +125°C IEC60068-2-78 (Humidity test) : 85°C • 85% humidity • 1,000 hours IEC60068-2-11, 52 (Salt spray test) IEC60068-2-64 (Vibration test) IEC62108, 10.8 • 9 (Solar industry test) : Freezing • High temperature tes • Hail impact test GR-3108-CORE (Corrosive gas test) UL94V-0 (Flame-resistant) • UL746C f1

Product no. / Dimensions

Product no.	Material				G			Lock nut SW
	1 Housing	2 Filter	3 O-ring	4 Lock nut	Thread size	Thread diameter	Mount hole	
PMF-32S	Polycarbonate	PTFE	Silicone	PA66	M32 x P1.5	Φ32	Φ33	41.5

VE8 series ADHESIVE PROTECTIVE VENT FILTER NEW

Technical Data
Protection class : Dustproof IP6X Waterproof IPX4, IPX7 Airflow: 3,300ml/min/cm2 (at 7Kpa) Operating temperature: -40°C ~ +100°C

- Improved airflow of 3,300ml/min/cm2 as compared to previous VSC series.
- Vent filter protects the enclosure from deformation by equalizing internal and external pressure differences, as well as venting the gas generated within the enclosure.
- Allows water vapor molecules to diffuse through the microporous membrane.
- Highly water and oil repellent membrane protects electronic components from water, corrosive liquids, salts and dust.
- Easy installation adhesive filter.
- Recommended to be adhered onto flat plastic or metallic surfaces.

CAUTION

- Install only on the inner surface of the case / box with the membrane and adhesive side facing outwards.
- An initial period of 24 hours is required for the adhesive to properly bond to the surface. Avoid using the vent filter with a heavy load.
- Please do not adhere onto the top-side of enclosures. Rain water etc. will collect on the filter, which will weaken the adhesive seal and prevent proper ventilation.
- After degreasing and cleaning, adhere the filter without touching the center part of the vent filter.
- Use in industrial and electrical / electronic products only; not suitable to be used in medical, food and beverage, and cosmetic industries and related industrial equipment.

VE8 drawings

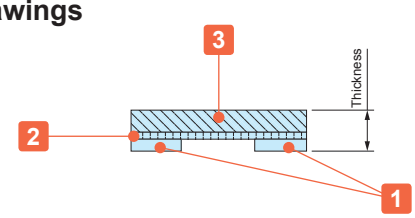

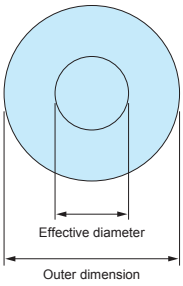

Installation drawings

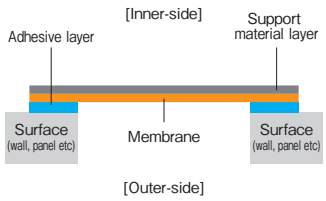

Adhesive type protective vent filter can be installed on any flat surface.

Components

No.	Part name	Material	Color
1	Adhesive	Acrylic adhesive	Transparent
2	Filter	ePTFE (Oil-repellent type)	White
3	Support material	Polyester fabric	White

Product no. / Dimensions

Product no.	Outer dimension (Φ·mm)	Effective diameter (Φ·mm)	Thickness (mm)	Sales unit
VE80308	7.6	3.3	0.26	8 pcs (per pack)
VE80814	14.0	8.0	0.26	4 pcs (per pack)
VE81221	21.5	12.5	0.26	4 pcs (per pack)
NEW VE82029S	29.0	20.0	0.35	2 pcs (per pack)
VE80308-S	7.6	3.3	0.26	96 pcs (per sheet)
VE80814-S	14.0	8.0	0.26	56 pcs (per sheet)
VE81221-S	21.5	12.5	0.26	20 pcs (per sheet)
NEW VE82029S-S	29.0	20.0	0.35	10 pcs (per sheet)

V series VENTILATION LOUVER

- Recommended for condensation prevention and heat dissipation.
- 2 models available : ABS V60, V80 match the color for BCAP and BCAR series, and polycarbonate V60S and V80S match the color for BCPC, BCPK, and BCAR series.
- Suitable to be used on a variety of enclosure types, series and models.

V dimensions

- DXF/DWG/PDF drawings available on our website.

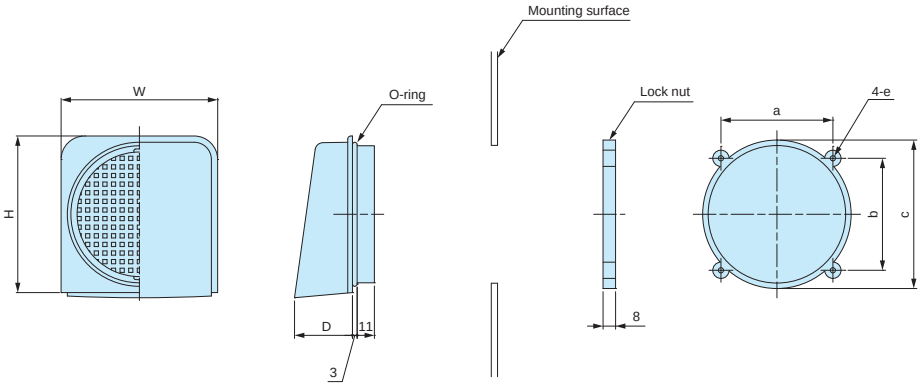

Product no. / Dimensions

Product no.	Material	Color	Mount hole	W	H	D	a	b	c	e
V60	ABS	White gray	Φ63	74	74	31.8	50.5	50.5	70	Φ3.8
V80	ABS	White gray	Φ88	100	100	37	71.5	71.5	94.8	Φ3.3
V60S	Polycarbonate	Light gray	Φ63	74	74	31.8	50.5	50.5	70	Φ3.8
V80S	Polycarbonate	Light gray	Φ88	100	100	37	71.5	71.5	94.8	Φ3.3

- O-ring material : NBR / Black

VF series VENTILATION PARTS

VF dimensions

- DXF/DWG/PDF drawings available on our website.

VF-1

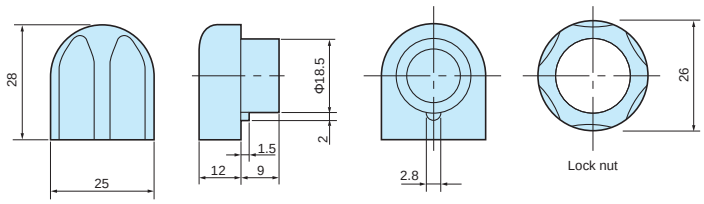

Hole layout for mounting

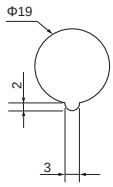

VF-2

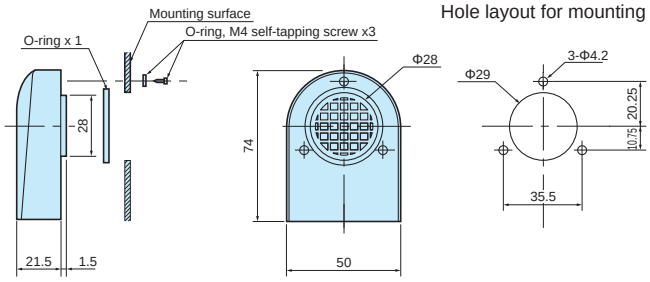

Hole layout for mounting

Technical Data
Protection class : VF-1 IP33 VF-2 IP24

Product no. / Dimensions

Product no.	Material / Color
VF-1	Polyamide / White gray
VF-2	Polyamide / White gray

BCSB series IP65 PLASTIC SWITCH BOX

NEW

Technical Data
Protection class : IP65 {Waterproof switch / Exclusive cable gland} required Operating Temperature : -20°C ~ +75°C Recommended torque : 1N • m ~ 1.5N • m

IP65

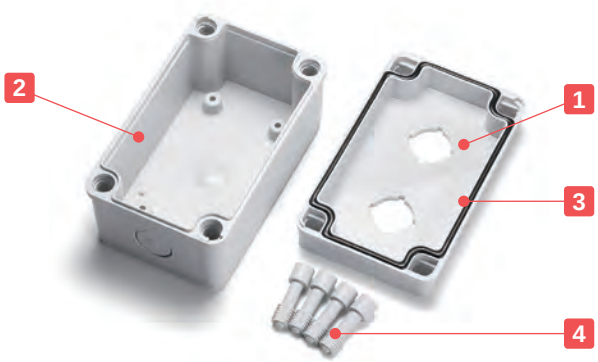

- IP65 switch box with 1 ~ 4 Φ22 hole(s) on the top cover.
- Made from flame retardant UL94V-0 high heat resistant polycarbonate material.
- Φ22 knock-outs on 2 opposite ends for easy wiring access if required.
- Exclusive cable gland, B131210G for Φ22 knock-outs is available as optional parts.
- IP65 protection class is maintained with waterproof switches and the exclusive cable glands installed.
- Yellow/Black color types available as BTO (built-to-order) at a MOQ of 500 pcs.

  For custom color order, the material would be changed to ABS UL94HB, with an operating temperature of -10°C ~ +60°C.

Components

No.	Part name	Pcs	Material	Color / Finish
1	Top cover	1	Polycarbonate UL94V-0	Light gray
2	Base	1	Glass fiber filled polycarbonate UL94V-0	Light gray
3	Gasket	1	Polyurethane	Black
4	Cover screw	4	Glass fiber filled nylon	White gray

Accessories (Optional parts)

Exclusive cable gland B131210G
See page 330

Stainless steel mounting bracket CK-34Z
See website

Spare cover screw CB20
See website

PCB mounting screw MT4-8T
See page 320

BCSB dimensions

■ DXF/DWG/PDF drawings available on our website.

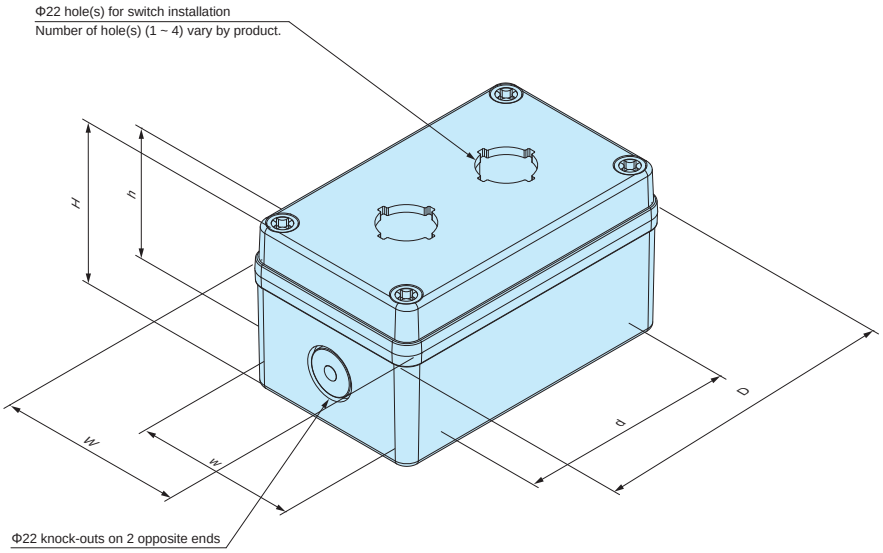

■ Wall mounting without an optional wall mounting bracket is possible through inserting the wall mount screw directly into the cover screw hole on the base part.

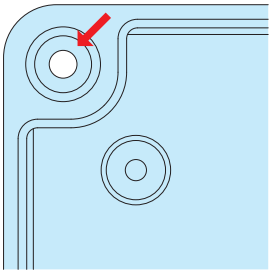

Product no. / Dimensions

Product no.	External dimensions			Internal dimensions			Switch hole(s)	Knock-outs	Weight (g)
	W	D	H	w	d	h			
BCSB081107-2201G	80	110.5	70.3	67	67	55.8	Φ22 x 1	Φ22 x 2	204
BCSB081307-2202G	80.5	130.5	70	67	87	55.6	Φ22 x 2	Φ22 x 2	222
BCSB081807-2203G	80	180	70.5	67	137	56.3	Φ22 x 3	Φ22 x 2	278
BCSB082507-2204G	80	250	71	67	207	56.3	Φ22 x 4	Φ22 x 2	364

Accessories (Optional parts)

B131210G EXCLUSIVE CABLE GLAND for BCSB

NEW

■ Exclusive cable gland for Φ22 knock-outs on BCSB series switch box.

■ The PG13.5 thread (Φ20.5) is a little smaller than Φ22 hole but is compatible for the Φ22 knock-out hole.

■ Install B131210G into the very center of the Φ22 knock-out hole.

■ Cap and connector are made from PA66 material, light gray color type. Sealing insert and O-ring are made from NBR material, black color type.

Technical Data
Protection class : IP65 Operating temperature : -20°C ~ +75°C

Product no. / Dimensions

Product no.	Cable range		Suitable models	Weight (g)
	Min	Max		
B131210G	7	11	BCSB series	12.7

■ DXF/DWG/PDF drawings available on our website.

TMC series TERMINAL JUNCTION BOX

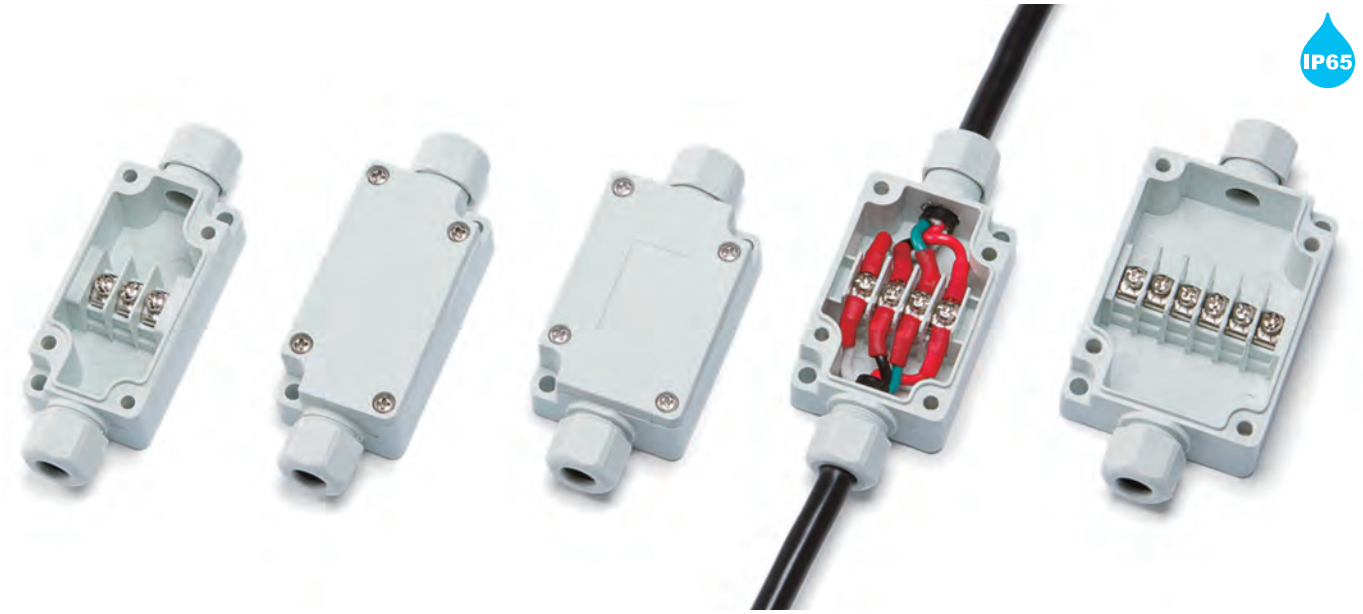

- Integrated junction box consisting of cable glands and a terminal block.
- Suitable for industrial facilities, power cable joints, relay between motors and/or sensors.
- IP65 protection class with high oil resistant PBT material.
- 3, 4, and 6 pole types are available.
- Φ5.0 and Φ7.4 rubber cable bushes (2 pcs each) are included.

Technical Data

Protection class: IP65
Operating temperature: -20°C ~ +75°C
Recommended torque : 0.5N • m

Applicable crimp terminal
R1.25-3

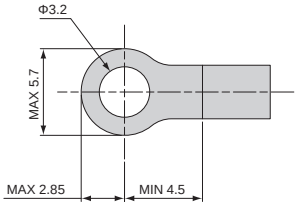

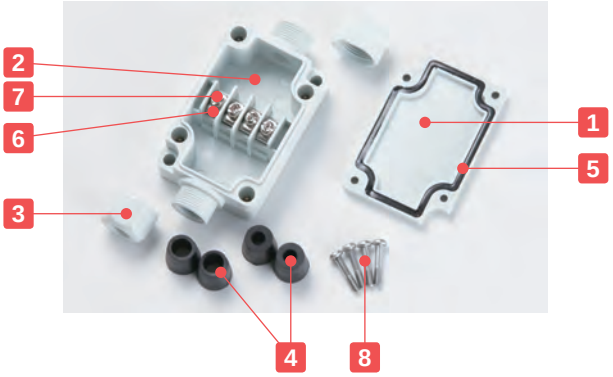

Terminal Block Specification

Rated voltage	250V
Rated current	15A
Applicable wire	1.25mm^2
Standard tightening torque	0.5N • m

Components

No.	Part name	Pcs	Material	Color / Finish
1	Cover	1	PBT UL94V-0	Light gray
2	Base	1	PBT UL94V-0	Light gray
3	Cable cap	2	PBT UL94V-0	Light gray
4	Rubber bush	2 pairs	EPDM	Black
5	Gasket	1	Polyurethane	Black
6	Conductive plate	3~6	Brass	Nickel plated
7	Terminal screw	3~6	Steel M3	Nickel plated
8	Cover screw	4	Stainless steel M3	Unfinished

Accessories (Optional parts)

Shorting Bar SBR series
See website

Rubber Bush RB series
See website

Product no. / Dimensions

Product no. ● Light gray	L	W	H	Number of poles	Weight (g)
TMC-3PG	65	33	24	3P	52
TMC-4PG	60	40	24	4P	58
TMC-6PG	70	50	24	6P	73

TMC dimensions

■ DXF/DWG/PDF drawings available on our website.

TMC-3PG

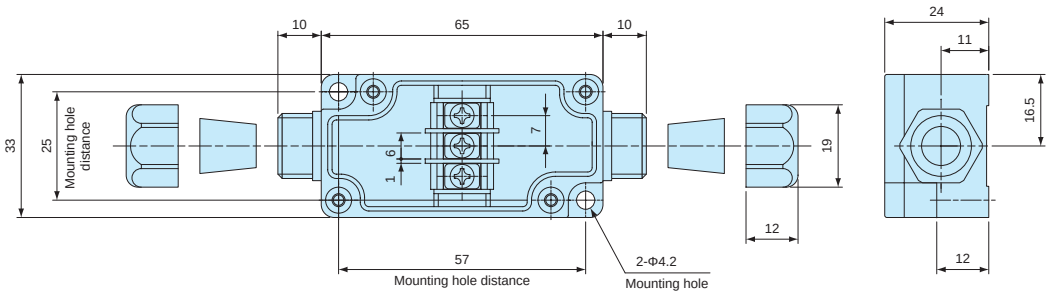

Inner diameter of rubber bush	Cable range
Φ5.0	Φ4 ~ Φ5
Φ7.4	Φ6 ~ Φ7

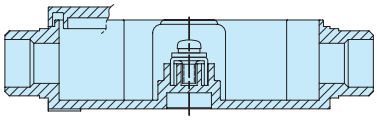

TMC-4PG

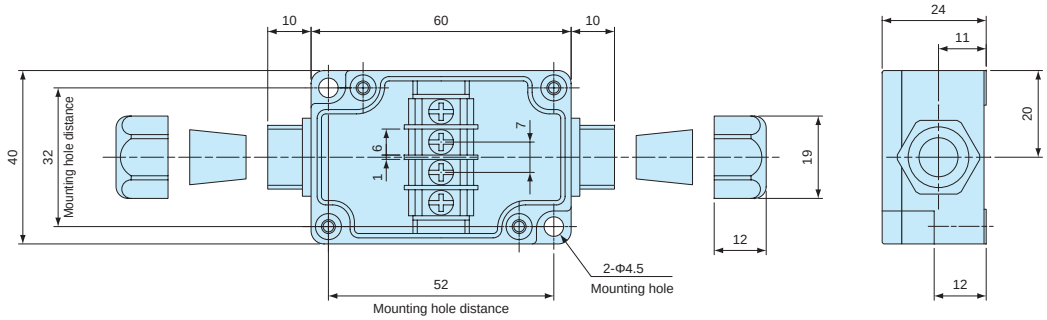

Inner diameter of rubber bush	Cable range
Φ5.0	Φ4 ~ Φ5
Φ7.4	Φ6 ~ Φ7

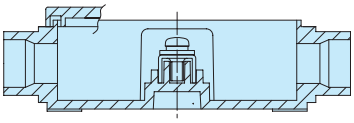

TMC-6PG

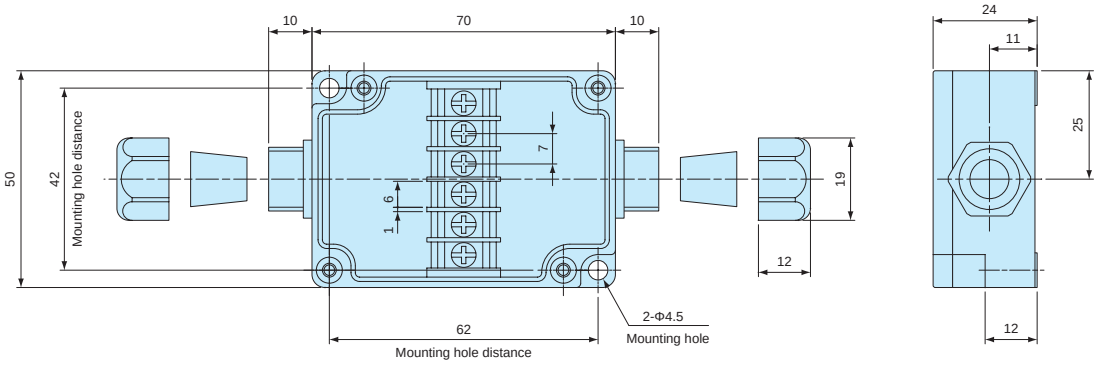

Inner diameter of rubber bush	Cable range
Φ5.0	Φ4 ~ Φ5
Φ7.4	Φ6 ~ Φ7

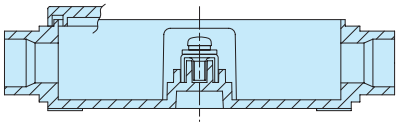

RMW series WEATHERPROOF CABLE GLAND

IP67

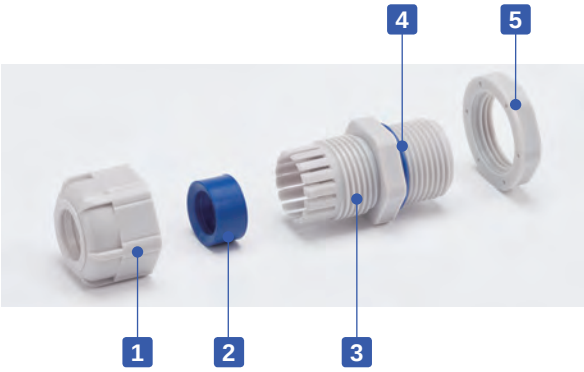

- Weatherproof cable gland equipped with high ultraviolet and degradation resistant silicone sealing insert and O-ring.
- Recommended to use outdoors where waterproofing is critical.
- IP67 protection class.

Components

■ PA = Polyamide

No.	Part name	Material
1	Cap	PA66 UL94V-2
2	Sealing insert	Silicone
3	Connector	PA66 UL94V-2
4	O-ring	Silicone
5	Lock nut	PA66 UL94V-2

RMW dimensions

■ DXF/DWG/PDF drawings available on our website.

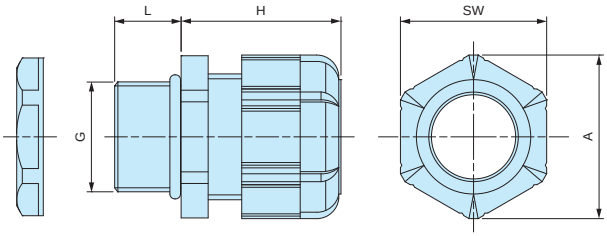

Technical Data

Protection class: IP67
Operating temperature: -20°C ~ +80°C

■ Lock nut is not included for RMW10S-6.
Please drill a proper thread hole into the enclosure for installation.

Product no. / Dimensions

Product no.		G		Cable range		L	H Max	SW	A	Pack of
● Black	● Light gray	Thread size	Mounting hole	Min	Max					
RMW8L-2.5B	RMW8L-2.5S	M8×1.25	Φ8.2	1	2.5	13	19.5	11.8	13.5	1
RMW8L-4B	RMW8L-4S	M8×1.25	Φ8.2	2.5	4	13	19.5	11.8	13.5	1
RMW10S-6B	RMW10S-6S	M10×1.5	—	3	6	8	20.5	13	14.4	1
RMW10L-6B	RMW10L-6S	M10×1.5	Φ10.2	3	6	13	20.5	13	14.4	1
RMW12S-7B	RMW12S-7S	M12×1.5	Φ12.2	3.5	7	9	20.5	16	17.6	1
RMW12L-7B	RMW12L-7S	M12×1.5	Φ12.2	3.5	7	14.5	20.5	16	17.7	1
RMW16S-8B	RMW16S-8S	M16×1.5	Φ16.2	4	8	9	23.5	19	21	1
RMW16L-8B	RMW16L-8S	M16×1.5	Φ16.2	4	8	15	24	19	21	1
RMW20S-12B	RMW20S-12S	M20×1.5	Φ20.2	6	12	10	29	24	26.2	1
RMW20L-12B	RMW20L-12S	M20×1.5	Φ20.2	6	12	15	28.5	24	26.2	1
RMW25L-17B	RMW25L-17S	M25×1.5	Φ25.2	11	17	15	35	33	36.2	1
RMW32L-21B	RMW32L-21S	M32×1.5	Φ32.3	13	21	15	38	36	39.5	1
RMW40L-27B	RMW40L-27S	M40×1.5	Φ40.3	18	27	18	43.5	45.7	50.5	1
RMW50L-38B	RMW50L-38S	M50×1.5	Φ50.4	27	38	20	50.5	60	66.5	1
RMW10L-6B-P	RMW10L-6S-P	M10×1.5	Φ10.2	3	6	13	20.5	13	14.4	100
RMW12S-7B-P	RMW12S-7S-P	M12×1.5	Φ12.2	3.5	7	9	20.5	16	17.6	100
RMW12L-7B-P	RMW12L-7S-P	M12×1.5	Φ12.2	3.5	7	14.5	20.5	16	17.7	100
RMW16S-8B-P	RMW16S-8S-P	M16×1.5	Φ16.2	4	8	9	23.5	19	21	100
RMW16L-8B-P	RMW16L-8S-P	M16×1.5	Φ16.2	4	8	15	24	19	21	100
RMW20S-12B-P	RMW20S-12S-P	M20×1.5	Φ20.2	6	12	10	29	24	26.2	100
RMW20L-12B-P	RMW20L-12S-P	M20×1.5	Φ20.2	6	12	15	28.5	24	26.2	100

RMW series silicone sealing insert weatherproof test report

Object: Cut into a piece of the silicone sealing insert from RMW series and attach it onto an aluminium plate.
For comparison, NBR sealing insert from our RM and EPDM sealing insert from another manufacturer is also attached for comparison purposes.

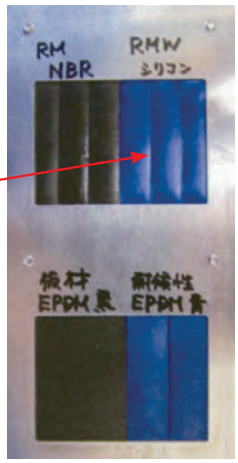

Before

After

Testing conditions

Equipment : 7.5kW Super Xenon Weather Meter SX75 (Suga Test Instruments Co., Ltd.- http://www.sugatest.co.jp/english/)
Conditions : JIS B7754 : 1991
Testing with an authorized Xenon arc lamp weathering test equipment under the conditions denoted below.
Irradiance : 180W/m^2 at 300-400nm
Black Panel Temperature : 63±3°C Humidity Range : 50±10%
Cycle Conditions : 120 minutes cycle (18 minutes irradiation + water spray - 102 minutes irradiation)
Time period : 2,000 hours (equivalent to a period of 4 years under natural conditions)
Total radiant exposure : 1296MJ/m^2

Test result (visual / touch inspection)

Silicone sealing insert material : No cracks, no gloss transition, no powder - no appearance change at all. Flexibility remains unchanged.

Before

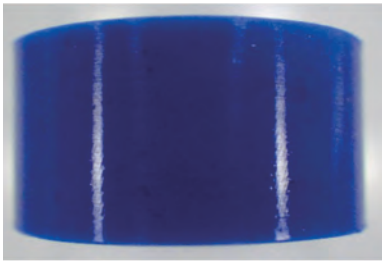

After

NBR material from our RM series : Lost glossiness on the surface and material is stiffened.

Before

After

EPDM material from weatherproof cable gland of another manufacturer : Cracked, color drastically faded and powder appeared on the surface.

Before

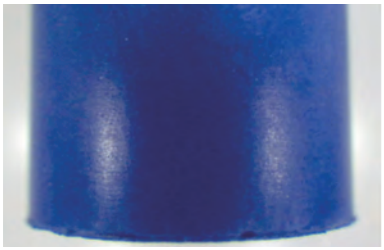

After

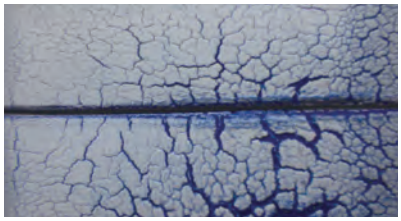

RM series POLYAMIDE CABLE GLAND

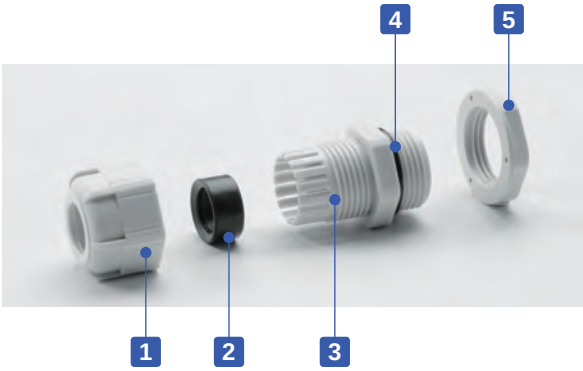

- Low cost cable glands made from polyamide material.
- Wide selection, for M8 ~ M63, suitable for Φ1mm ~ Φ44 mm cable.
- High oil resistant NBR rubber sealing and O-ring.
- IP67 protection class.

Components

■ PA = Polyamide

No.	Part name	Material
1	Cap	PA66 UL94V-2
2	Sealing insert	NBR
3	Connector	PA66 UL94V-2
4	O-ring	NBR
5	Lock nut	PA66 UL94V-2

RM dimensions

■ DXF/DWG/PDF drawings available on our website.

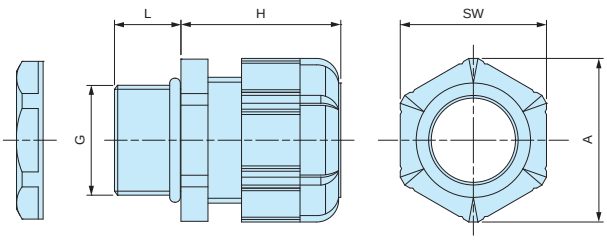

Technical Data

Protection class: IP67
Operating temperature: -20°C ~ +80°C

■ Lock nut is not included for RM8S-2.5, 8S-4, and 10S-6 models.
Please drill a proper thread hole into the enclosure for installation.

Product no. / Dimensions

Product no.		G		Cable range		L	H Max	SW	A	Pack of
● Black	● Light gray	Thread size	Mounting hole	Min	Max					
RM8S-2.5B	RM8S-2.5S	M8×1.25	—	1	2.5	7.5	19.5	11.8	13.5	1
RM8L-2.5B	RM8L-2.5S	M8×1.25	Φ8.2	1	2.5	13	19.5	11.8	13.5	1
RM8S-4B	RM8S-4S	M8×1.25	—	2.5	4	7.5	19.5	11.8	13.5	1
RM8L-4B	RM8L-4S	M8×1.25	Φ8.2	2.5	4	13	19.5	11.8	13.5	1
RM10S-6B	RM10S-6S	M10×1.5	—	3	6	8	20.5	13	14.4	1
RM10L-6B	RM10L-6S	M10×1.5	Φ10.2	3	6	13	20.5	13	14.4	1
RM12S-7B	RM12S-7S	M12×1.5	Φ12.2	3.5	7	9	20.5	16	17.6	1
RM12L-7B	RM12L-7S	M12×1.5	Φ12.2	3.5	7	14.5	20.5	16	17.7	1
RM16S-8B	RM16S-8S	M16×1.5	Φ16.2	4	8	9	23.5	19	21	1
RM16L-8B	RM16L-8S	M16×1.5	Φ16.2	4	8	15	24	19	21	1
RM20S-12B	RM20S-12S	M20×1.5	Φ20.2	6	12	10	29	24	26.2	1
RM20L-12B	RM20L-12S	M20×1.5	Φ20.2	6	12	15	28.5	24	26.2	1
RM25L-17B	RM25L-17S	M25×1.5	Φ25.2	11	17	15	35	33	36.2	1
RM32L-21B	RM32L-21S	M32×1.5	Φ32.3	13	21	15	38	36	39.5	1
RM40L-27B	RM40L-27S	M40×1.5	Φ40.3	18	27	18	43.5	45.7	50.5	1
RM50L-38B	RM50L-38S	M50×1.5	Φ50.4	27	38	20	50.5	60	66.5	1
RM63L-44B	RM63L-44S	M63×1.5	Φ63.4	37	44	20	53	68	75.5	1
RM10L-6B-P	RM10L-6S-P	M10×1.5	Φ10.2	3	6	13	20.5	13	14.4	100
RM12S-7B-P	RM12S-7S-P	M12×1.5	Φ12.2	3.5	7	9	20.5	16	17.6	100
RM12L-7B-P	RM12L-7S-P	M12×1.5	Φ12.2	3.5	7	14.5	20.5	16	17.7	100
RM16S-8B-P	RM16S-8S-P	M16×1.5	Φ16.2	4	8	9	23.5	19	21	100
RM16L-8B-P	RM16L-8S-P	M16×1.5	Φ16.2	4	8	15	24	19	21	100
RM20S-12B-P	RM20S-12S-P	M20×1.5	Φ20.2	6	12	10	29	24	26.2	100
RM20L-12B-P	RM20L-12S-P	M20×1.5	Φ20.2	6	12	15	28.5	24	26.2	100
RM25L-17B-P	RM25L-17S-P	M25×1.5	Φ25.2	11	17	15	35	33	36.2	100

RSP series STRAIN RELIEF CABLE GLAND

■ Strain relief cap protects cables by preventing it from bending beyond its limit and breaking.

Technical Data
Protection class : IP67 Operating temperature : -20°C ~ +80°C

RSP dimensions

■ DXF/DWG/PDF drawings available on our website.

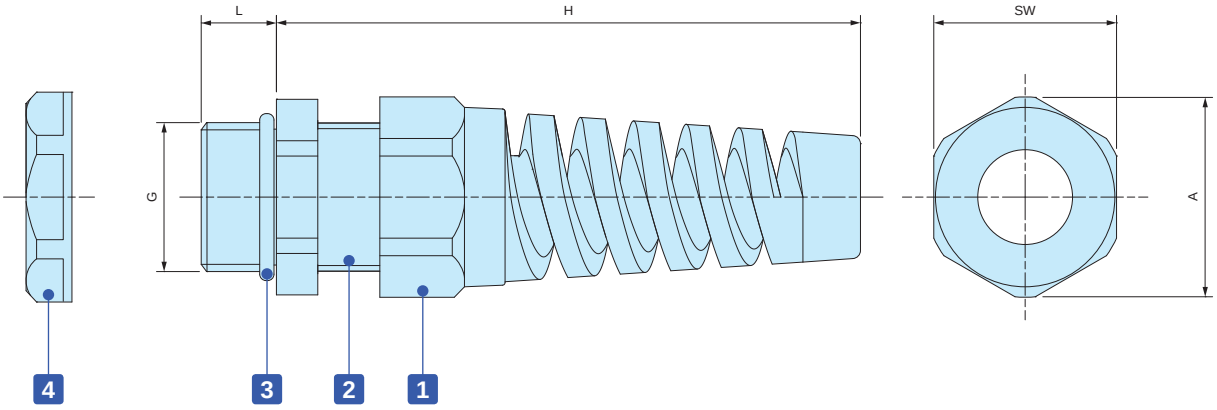

Components

No.	Part name	Material
1	Stain relief cap	PA66 UL94V-2
-	Sealing insert	NBR
2	Connector	PA66 UL94V-2
3	O-ring	NBR
4	Lock nut	PA66 UL94V-2

Product no. / Dimensions

Product no.		G		Cable range		L	H Max	SW	A	Pack of
● Black	● Light gray	Thread size	Mounting hole	Min	Max					
RSP12-6B	RSP12-6S	M12×1.5	Φ12.2	3.5	6	9	62	16	17	1
RSP16-8B	RSP16-8S	M16×1.5	Φ16.2	4	8	9	69	19.5	21	1
RSP20-11B	RSP20-11S	M20×1.5	Φ20.2	6	11	10	82	24	26	1
RSP25-16B	RSP25-16S	M25×1.5	Φ25.2	11	16	12	102	33	36	1

AG series HIGH WATER PROTECTION CABLE GLAND

- High water protection IP68 (1bar / 30min) polyamide cable gland.
- Wide selection, for M8 ~ M50, suitable for Φ2.5mm ~ Φ42 mm cable.
- Super tough and superior heat resistant PA6GF (glass fiber filled PA6) material on cap and connector.
- Safer halogen free, eco-friendly product.

Technical Data
Protection class: IP68 1bar / 30min Operating temperature: -20°C ~ +100°C Compliant with EN50262 Ver. A

AG series

Thicker sealing insert evenly hold a cable by having a larger holding area. Remains durable even after repeated tightening / loosening.

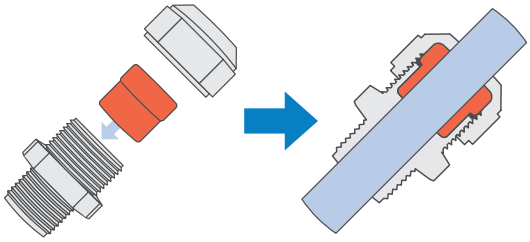

Lamellar insert type

If over-tightened, it can cause the rubber bush or cable to deform, which can allow water to seep in.

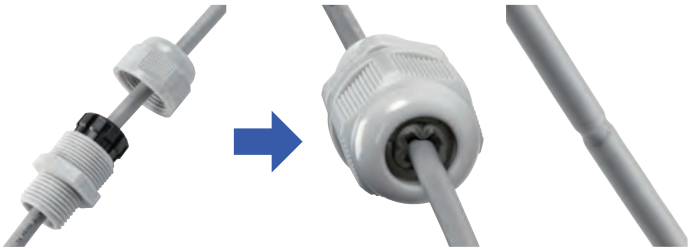

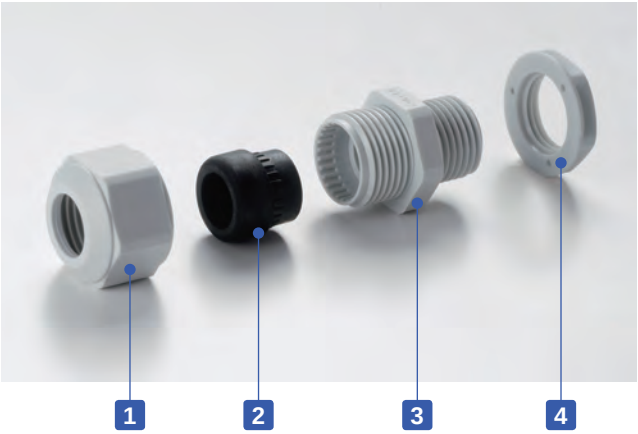

Components

■ PA6GF = Polyamide6 Glass Fiber Filled

No.	Part name	Material
1	Cap	PA6GF
2	Sealing insert	TPE
3	Connector	PA6GF
4	Lock nut	PA6

■ Lock nut is not included for M8 and M10 sizes.
Please drill a proper thread hole into the enclosure for installation.

■ Proper tightening torque varies by each cable diameter. Tighten the cap until top of the sealing insert forms a small bead between the cap and the cable.

- No optional sealing washer is required when installing on an even surface because of the built-in waterproof rib.

- An optional sealing washer is required when installing on an uneven surface. (See website for more information on the optional sealing washer)

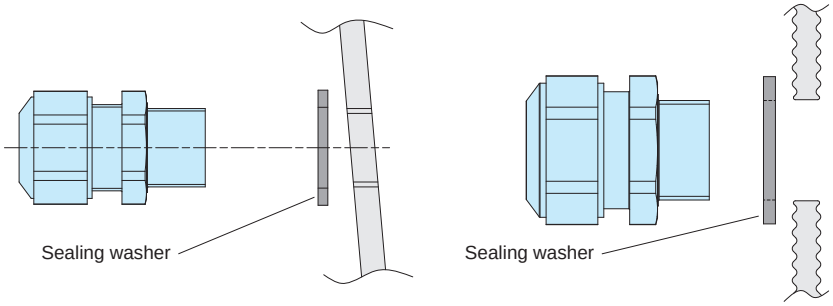

AG dimensions

- DXF/DWG/PDF drawings available on our website.

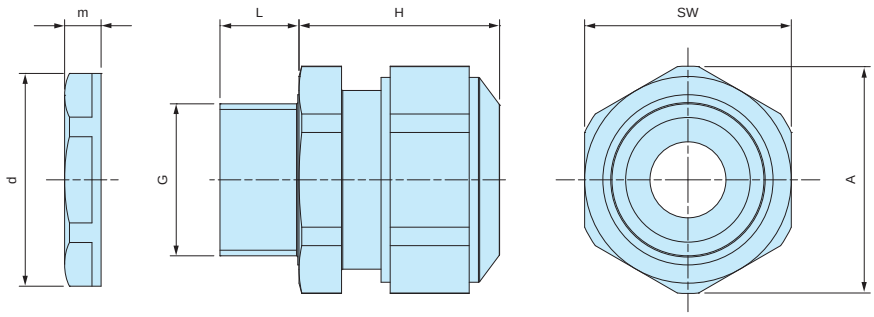

- Lock nut is not included for M8 and M10 sizes.
  Please drill a proper thread hole into the enclosure for installation.

Product no. / Dimensions

Product no.		G		Cable range		L	H Max	SW	A	d	m	Pack of
● Black	● Light gray	Thread size	Mounting hole	Min	Max							
AG8-3.5B	AG8-3.5S	M8×1.0	—	2.5	3.5	10	17	12	13.2	—	—	1
AG8-5B	AG8-5S	M8×1.0	—	3.5	4.7	10	17	12	13.2	—	—	1
AG10-6B	AG10-6S	M10×1.0	—	4	6	10	19	15	16.5	—	—	1
AG12-5B	AG12-5S	M12×1.5	Φ12.2	3.5	4.7	12	23.5	17	18.7	18.8	5	1
AG12-6.5B	AG12-6.5S	M12×1.5	Φ12.2	5	6.5	12	23	17	18.7	18.8	5	1
AG12-8B	AG12-8S	M12×1.5	Φ12.2	6.5	7.8	12	23	17	18.7	18.8	5	1
AG16-10B	AG16-10S	M16×1.5	Φ16.2	8	10	12	26	21	23.1	24.3	5	1
AG20-15B	AG20-15S	M20×1.5	Φ20.2	11	15	13	27	27	29.7	29	6	1
AG25-16B	AG25-16S	M25×1.5	Φ25.2	12.5	16	13	34	34	37.4	36	6.7	1
AG25-20B	AG25-20S	M25×1.5	Φ25.2	16	20	13	34	34	37.4	36	6.7	1
AG32-25.5B	AG32-25.5S	M32×1.5	Φ32.3	21	25.5	15	36	41	45.6	46	8	1
AG40-28.5B	AG40-28.5S	M40×1.5	Φ40.3	24	28.5	15	41	50	55.4	53.5	9	1
AG40-33B	AG40-33S	M40×1.5	Φ40.3	28.5	33	15	41	50	55.4	53.5	9	1
AG50-37B	AG50-37S	M50×1.5	Φ50.4	33	37	16	45	60	65.5	66	9.6	1
AG50-42B	AG50-42S	M50×1.5	Φ50.4	37	42	16	45	60	65.5	66	9.6	1

AGM series METAL CABLE GLAND

- High water protection IP68 (1bar / 30min) metal cable gland.
- Wide selection, for M6 ~ M50 and PG7 ~ PG16.
  Suitable for Φ2 mm ~ Φ42 mm cable.

Technical Data
Protection class: IP68 1bar / 30min Operating temperature: -40°C ~ +100°C Compliant with EN50262 Ver. A

AGM series

Thicker sealing insert evenly hold a cable by having a larger holding area. Remains durable even after repeated tightening / loosening.

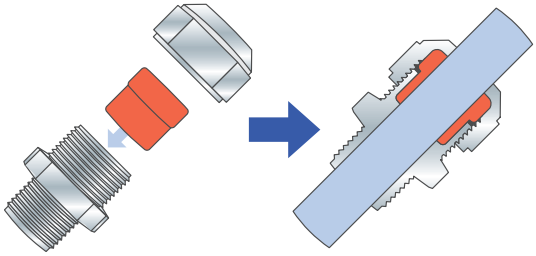

Lamellar insert type

If over-tightened, it can cause the rubber bush or cable to deform, which can allow water to seep in.

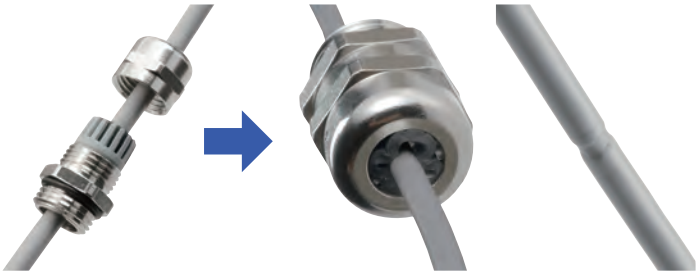

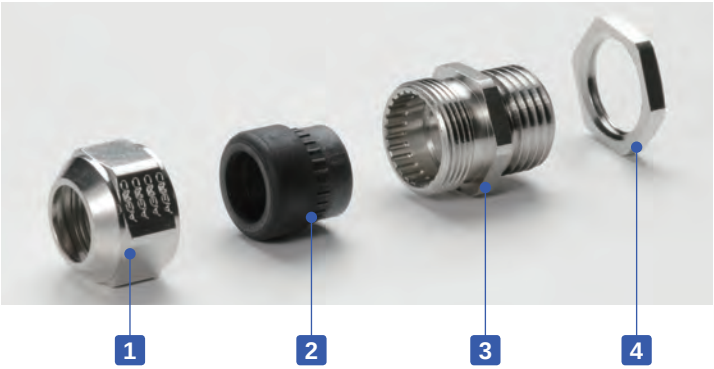

- Proper tightening torque varies by each cable diameter.
  Tighten the cap until top of the sealing insert forms a small bead between the cap and the cable.

Components

No.	Part name	Material	Color / Finish
1	Cap	Brass	Nickel plated
2	Sealing insert	TPE	Black
3	Connector	Brass	Nickel plated
-	O-ring	NBR	Black
4	Lock nut	Brass	Nickel plated

AGM dimensions

■ DXF/DWG/PDF drawings available on our website.

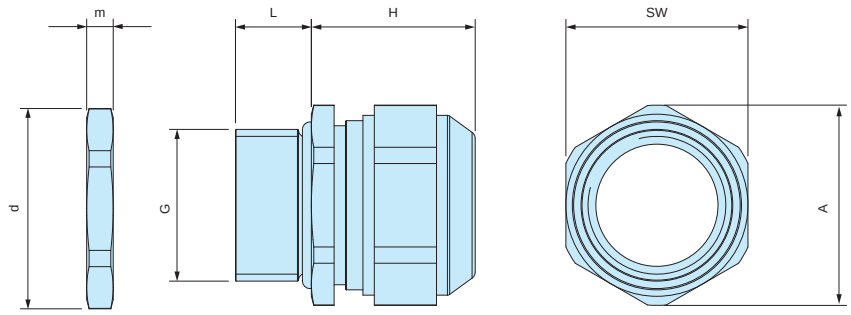

Product no. / Dimensions

Product no.	G			Cable range		L	H Max	SW	A	d	m	Pack of
	Thread size	Thread outer dia.	Mounting hole	Min	Max							
AGM6-2.5	M6×1.0	—	Φ6.2	2	2.5	8	12	8	9	10	2.8	1
AGM6-3	M6×1.0	—	Φ6.2	2.5	3.0	8	12	8	9	10	2.8	1
AGM6-3.5	M6×1.0	—	Φ6.2	3.0	3.5	8	12	8	9	10	2.8	1
AGM8-5	M8×1.25	—	Φ8.2	3.5	4.7	10	14	11	12	12	3	1
AGM10-6	M10×1.5	—	Φ10.2	4.0	6.0	10	15	13	14.3	14	2.8	1
AGM12-8	M12×1.5	—	Φ12.2	6.5	8.0	10	17	15	16.5	16.5	2.8	1
AGM16-10.5	M16×1.5	—	Φ16.2	8.0	10.5	10	21	18	20	21	3	1
AGM20-15	M20×1.5	—	Φ20.2	11.0	15.0	10	23	24	26.5	26.5	3.5	1
AGM25-20	M25×1.5	—	Φ25.2	16.0	20.0	11	28	30	33	33	4	1
AGM32-25.5	M32×1.5	—	Φ32.3	21.0	25.5	13	29.5	36	39.5	39.5	4	1
AGM40-28.5	M40×1.5	—	Φ40.3	24.0	28.5	13	32	46	50.7	51	5	1
AGM40-33	M40×1.5	—	Φ40.3	28.5	33.0	13	32	46	50.7	51	5	1
AGM50-37	M50×1.5	—	Φ50.4	33.0	37.0	14	34	55	59.7	60	5.5	1
AGM50-42	M50×1.5	—	Φ50.4	37.0	42.0	14	34	55	59.7	60	5.5	1

CJCV series USB DUST COVER FLAP

- USB TYPE-A connector dust cover plug with stopper cord.
- Hole milling is required for flap installation.

How to Install

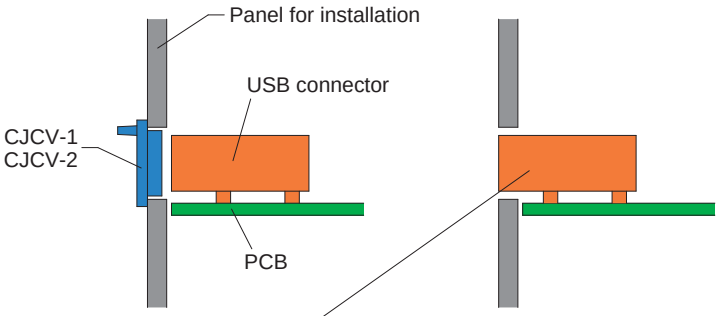

Incorrect Position

- The USB connector should be mounted such that it does not protrude out from the panel's inner side.

Hole layout for installing

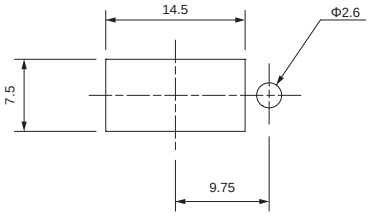

Product no. / Feature

- DXF/DWG/PDF drawings available on our website.

Product no.	Material	Color	Panel thickness	Pack of
CJCV-1	TPU	Black	0.5 ~ 2.0mm	10
CJCV-2	TPU	Black	2.0 ~ 12.0mm	10

USBC series USB DUSTPROOF BLIND PLUG

NEW

USB TYPE-A

USBC-2 (Pull-tab type)

USBC-8 (No pull-tab type)

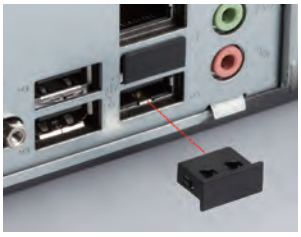

- Easy insertion plug for USB type-A connector.

Product no. / Feature

- DXF/DWG/PDF drawings available on our website.

Product no.	Material	Color	Pack of
USBC-2	ABS UL94HB	Black	10
USBC-8	PA66 UL94V-2	Black	10

USB TYPE-B

USBC-1 (Pull-tab type)

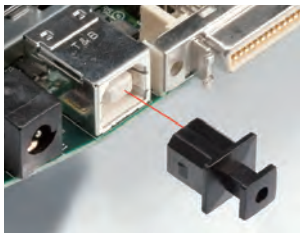

USBC-3 (No pull-tab type)

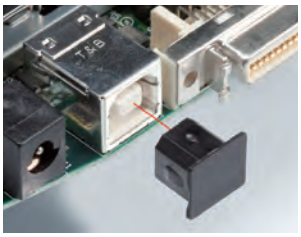

Product no. / Feature

- DXF/DWG/PDF drawings available on our website.

Product no.	Material	Color	Pack of
USBC-1	ABS UL94HB	Black	10
USBC-3	PP UL94HB	Black	10

USB TYPE-C

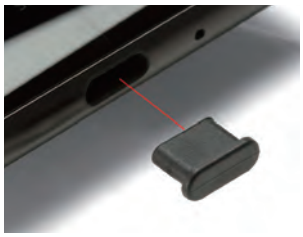

USB Type-C connector

Product no. / Feature

- DXF/DWG/PDF drawings available on our website.

Product no.	Material	Color	Pack of
NEW USBC-3C	PE	Black	10

USB 3.0 Micro B

USB 3.0 Micro B connector

Product no. / Feature

■ DXF/DWG/PDF drawings available on our website.

Product no.	Material	Color	Pack of
NEW USBC-21	TPE	Black	10

MICRO USB

USBC-31

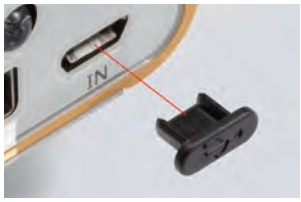

MINI USB

USBC-10

Product no. / Feature

■ DXF/DWG/PDF drawings available on our website.

Product no.	Material	Color	Pack of
USBC-31	PE	Black	10
USBC-10	TPE	Black	10

KPS•USB3C series USB DUSTPROOF CONNECTOR COVER NEW

USB TYPE-A

Product no. / Feature

Product no.	Material	Color	Pack of
KPS-6	PE	Natural	10

USB TYPE-C

Product no. / Feature

Product no.	Material	Color	Pack of
NEW USB3C-3	PE	Natural	10

MICRO USB

Product no. / Feature

Product no.	Material	Color	Pack of
KPS-21	PE	Natural	10

■ DXF/DWG/PDF drawings available on our website.

DTC series D-SUB • DVI DUSTPROOF CONNECTOR COVER

DTC dimensions

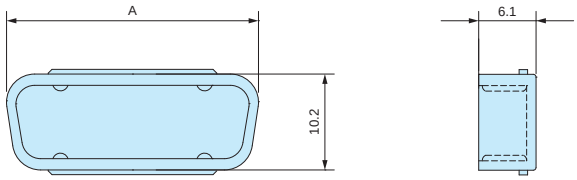

■ DXF/DWG/PDF drawings available on our website.

Product no. / Dimensions / Feature

Product no.	Matching connector	A	Material	Color	Pack of
DTC- 9F	D-sub 9 pin	18.5	PP UL94HB	Gray	10
DTC-15F	D-sub 15 pin • DVI	26.8	PP UL94HB	Gray	10
DTC-25F	D-sub 25 pin	40.6	PP UL94HB	Gray	10

PLC-3TV POWER INLET DUSTPROOF BLIND PLUG

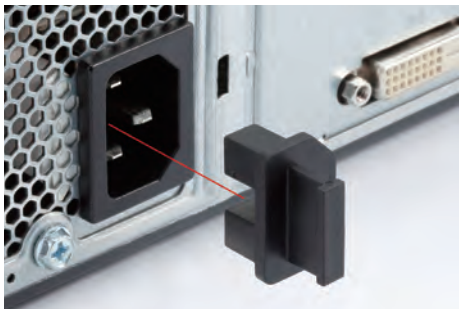

PLC-3TV dimensions

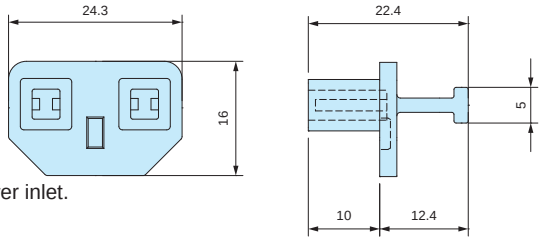

■ Pull-tab type blind plug for power inlet.

Product no. / Feature

■ DXF/DWG/PDF drawings available on our website.

Product no.	Material	Color	Pack of
PLC-3TV	TPE UL94V-0	Black	5

PJR-45 • PJS-45 RJ45 DUSTPROOF BLIND PLUG

PJR-45 (Pull-tab type)

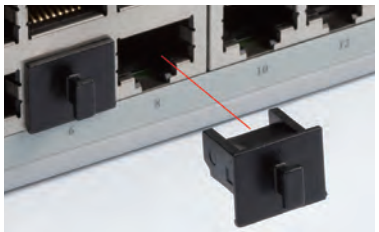

PJS-45 (No pull-tab type)

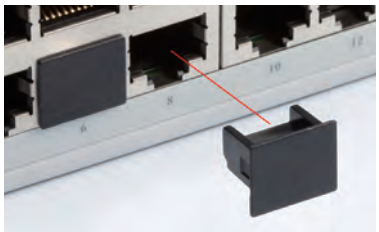

Product no. / Feature

Product no.	Material	Color	Pack of
PJR-45	PE	Black	10
PJS-45	ABS UL94HB	Black	10

■ DXF/DWG/PDF drawings available on our website.

PJCV-1 RJ45 DUSTPROOF CONNECTOR COVER

Product no. / Feature

■ DXF/DWG/PDF drawings available on our website.

Product no.	Material	Color	Pack of
PJCV-1	PE	Natural	10

SFPC • CXP series FIBER OPTIC PORT DUSTPROOF PLUG

NEW

■ Dustproof pull-tab cover plug for fiber optic connector port.

For SFP port

SFPC-11

For QSFP port

SFPC-12

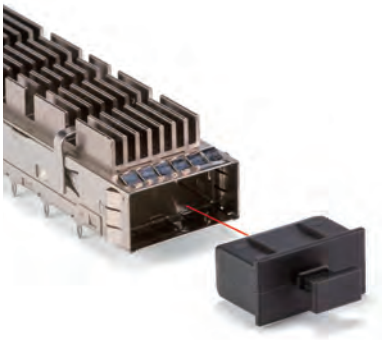

For CXP port

CXP-2

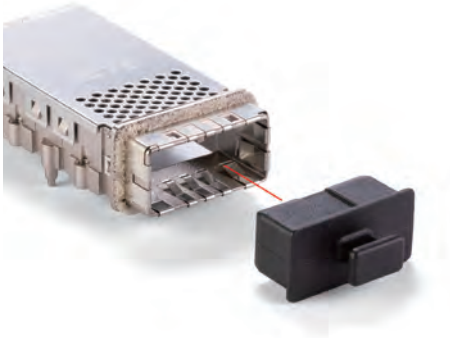

Product no. / Feature

Product no.	Material	Color	Pack of
NEW SFPC-11	PE	Black	10
NEW SFPC-12	PE	Black	10
NEW CXP-2	PE	Black	10

■ DXF/DWG/PDF drawings available on our website.

HDMIC series HDMI DUSTPROOF BLIND PLUG

HDMIC-1 (Pull-tab type)

HDMIC-3 (No pull-tab type)

Product no. / Feature

Product no.	Material	Color	Pack of
HDMIC-1	PE	Black	10
HDMIC-3	ABS UL94HB	Black	10

■ DXF/DWG/PDF drawings available on our website.

HDMIT-1 HDMI DUSTPROOF CONNECTOR COVER

Product no. / Feature

Product no.	Material	Color	Pack of
HDMIT-1	PE	Natural	10

■ DXF/DWG/PDF drawings available on our website.

SERIES INDEX

Series	Page
AEG	180
AFM	293-294
AFS	293-294
AG	337-338
AGM	339-340
ALR	145-148
ASR	121
AST	121
AU	149-154
AUC	179-180
AUCG	180
AUG	149-150, 171-174, 179-180
AUGE	149-150, 175-180
AUP	149-150, 155-158, 179-180
AUPE	149-150, 159-162, 179-180
AUX	149-150, 163-166, 179-180
AUXE	149-150, 167-170, 179-180
AW	223-226, 235-236, 238
AWA	231-236, 238
AWC	238
AWN	223-224, 227-228, 235-238
AWP	223-224, 229-230, 235-236, 238
AWSP	237
B131210G	330
BC	125-128
BCAP • BCPC	301-306, 311-322
BCAR • BCPR	301-304, 309-322
BCC-1	316
BCPK	301-304, 307-308, 311-322
BCSB	329-330
BDN	299-300
BFL	320
BMP	317-319
BRF	315-316
CBF-1G	292
CJCV	341
CK	320
CR123A	124
CR2	124
CR-20	96
CS	49, 81-84, 87-90
CSPB	90
CSS	49, 81-86, 90
CSSC	89
CUBE	120
CXP	344
DK	118
DRA	119
DRT	119
DTC	343
EF	254
EM	123
EX	197-200, 215-220, 254
EXEF	197-200, 211-212, 217-220
EXEG	221
EXH	239-244, 251-253
EXHE	239-242, 245-246, 251-254
EXHF	239-242, 247-248, 251-254
EXHFE	239-242, 249-253
EXP	197-200, 203-204, 217-220
EXPE	197-200, 205-206, 217-220
EXPF	197-200, 209-210, 217-220
EXPT	197-202, 217-220
EXW	197-200, 207-208, 217-220
EXWF	197-200, 213-214, 217-220
FC	267-274, 279-282
FC-BK	280
FCC	281-282
FCK	282
FCW	267-268, 275-282
FW	280
GDH	118
HCS	238
HD	141-144
HDMIC • HDMIT	344
HY	255-258
HYC	257
HYCL	257
KPS	342
LC	50, 63-66, 75-76, 79-80
LCE	63-66, 77-80
LCS	50, 63-66, 71-74
LCSC	80
LCT	50, 63-70
LCTP	79
MAR	181-182

Series	Page
MCG	265-266
MG-1	266
MR	22, 123
MS	283-291
MSC	291
MSCL	291
MT	122, 320
MT2.5-4	140
MT-3N	221
MT4-8T	7, 320
MX	183-186, 193-196
MXA	183-186, 191-192, 195-196
MXB	183-186, 188-190, 195-196
MXF	183-188, 195-196
NMG	117
OB	11-14
OBP	14
PF	35-40
PFE	41-42
PFF	43-44
PFG	31-34
PFRF	22, 42
PH-88	280
PJR • PJS • PJCV • PLC-3TV	343
PKB	324
PMF	325-326
PS	91-94
RM	335
RMW	333-334
RPA	135-136
RPCB-4B	139
RPH	129-132
RPHD	129-130, 137-138
RPI	133-134
RPS	140
RPSP2.5-11	140
RS	295
RSP	336
SFPC	344
SIB	110, 196
SIC	25-28
SIM	25-26, 29-30
SJ-P	296
SKL	111-114
SNB	323
SSK	321-322
STP	96
STPS	95
TB	296
TC	295
TD	297-298
TL	292
TLW	222
TMC	331-332
TPS	122
TW • TWN	107-110
TWF	45-48
TWS	101-106
TWSC	109
UC	259-262
UCC	261
UCF-26	262
UCG	263-264
UCK-P	262
UG-1	264
USB3C	342
USBC	341-342
V	328
VE8	327
VF	328
WC	49-55
WCPB	56
WG	1-4, 7-10
WGF	9
WGMB	9
WGP	7
WGV	1-2, 5-10
WH	50, 57-62
WM	116
WP	15-24
WPMB	21
WPMB-M4-2	10
WPMB-M4-3	115
WSC	97-100
WSP-M2.3	100
WTB	8

COMPANY PROFILE

COMPANY NAME	TAKACHI ELECTRONICS ENCLOSURE CO., LTD.
ADDRESS	3-21-16 Higashi-ryoke, Kawaguchi, Saitama, JAPAN, 332-0003
ESTABLISHED	JULY 1,1979

TAKACHI website available

Our range of products are available in categorized webpages and PDF format for easy viewing.

STP, DXF, DWG and PDF drawings are available for download.
Download them to help with your design or customization requirements.

Visit our website for all information you need!

www.takachi-enclosure.com

TAKACHI ELECTRONICS ENCLOSURE CO., LTD.

www.takachi-enclosure.com

3-21-16, Higashi-ryoke, Kawaguchi,
Saitama, JAPAN 332-0003

TEL. +81-48-222-5409

sales@takachi-el.co.jp